CARLO GAVAZZI SPACE SpA	0 RICH SYSTEM Engineering Change Order	1 ECO ref	Doc N°: **ECO-00008** Date: **24.02.05** Page **1** of **2** attach. **A**

2 DRAWING N° / REV. / TITLE:
12-RICSYS-20.001 REV / - RICH SYSTEM BEAM 5 mm

3 SHEETS AFFECTED:
1/1

4 PREPARED BY:
G. MOLINARI

5 ORIGIN:
NCR-RICSYS-CGS-C-006

6 REASON FOR REVISION:

CHANGES IN MECHANICAL DESIGN OF "Griglia Y Assy"

7 CHANGE DESCRIPTION:

1. DRAWING IS NOW PLACED ON 2 SHEETS.
2. ADDED TWO DASH NUMBERS:

   -01 NO CHANGE FROM REVISION "/"

   -02

   a. CHANGED BEAM THICKNESS
      WAS : 7mm → SEE ANNEX A 1/3, Drawing ref. ***B-1***
      IS : 6.6mm → SEE ANNEX A 3/3, Drawing ref. ***A-1***

   b. CHANGED DISTANCE OF HOLES FROM REWORKED FACE
      WAS : 3.5mm → SEE ANNEX A 1/3, Drawing ref. : ***E-1***
      IS : 3.1mm → SEE ANNEX A 3/3, Drawing ref. : ***B-3***

8 OTHER DRAWINGS AFFECTED:

N.A.

C.C.B. DISPOSITION:

9	10 CLASS:	11 Eng.	12 P.A.	13 C.C.	14 Date
Approved ☒ Rejected ☐	3	24/2/05	24.02.05		25/5

All information contained in this document are property of CARLO GAVAZZI SPACE SpA. All rights reserved

CONTINUATION SHEET

☐ **DRAWING N° / REV. / TITLE:** ☐ **ORIGIN:** ☐ **REASON FOR REVISION:**

☐ **CHANGE DESCRIPTION:** ☐ **OTHER DRAWINGS AFFECTED:**

All information contained in this document are property of CARLO GAVAZZI SPACE SpA. All rights reserved

ECO-00008 FROM NCR-RICSYS-CGS-C-006 ANNEX A 1/3

WAS

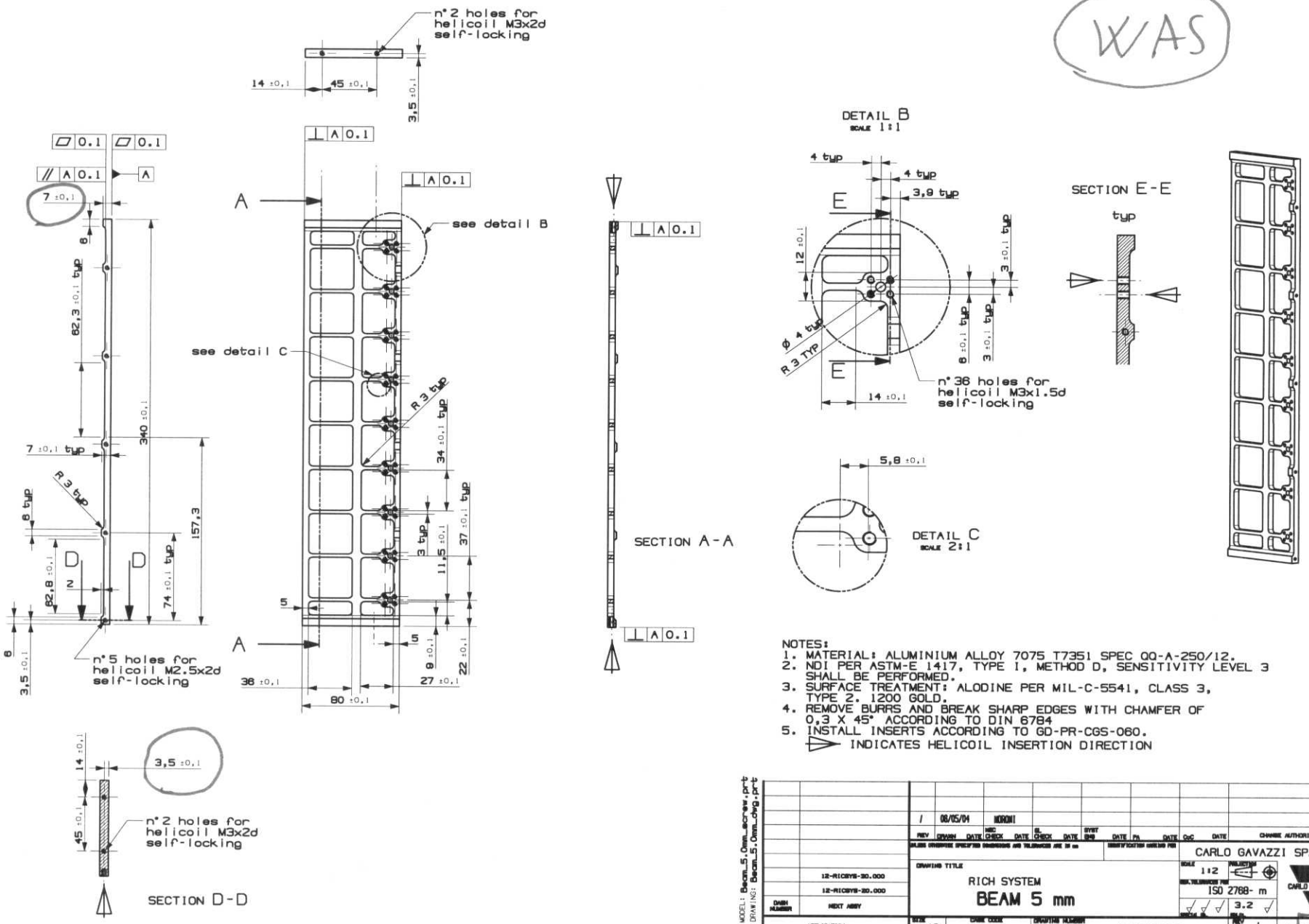

NOTES:
1. MATERIAL: ALUMINIUM ALLOY 7075 T7351 SPEC QQ-A-250/12.
2. NDI PER ASTM-E 1417, TYPE I, METHOD D, SENSITIVITY LEVEL 3 SHALL BE PERFORMED.
3. SURFACE TREATMENT: ALODINE PER MIL-C-5541, CLASS 3, TYPE 2. 1200 GOLD.
4. REMOVE BURRS AND BREAK SHARP EDGES WITH CHAMFER OF 0,3 X 45° ACCORDING TO DIN 6784
5. INSTALL INSERTS ACCORDING TO GD-PR-CGS-060.

INDICATES HELICOIL INSERTION DIRECTION

REV	DRAWN	DATE	MEC CHECK	DATE	EL CHECK	DATE	SYST ENG	DATE	PA	DATE	QoC	DATE	CHANGE AUTHORITY
1		08/05/04	NORONI										

UNLESS OTHERWISE SPECIFIED DIMENSIONS AND TOLERANCES ARE IN mm — IDENTIFICATION MARKING PER

CARLO GAVAZZI SPACE

DRAWING TITLE: RICH SYSTEM BEAM 5 mm

SCALE 1:2 — PROJECTION — GEN. TOLERANCES PER ISO 2768- m — 3.2

DASH NUMBER: 12-RICSYS-20.000 / 12-RICSYS-20.000 — NEXT ASSY

APPLICATION — SIZE A2 — CAGE CODE — DRAWING NUMBER 12-RICSYS-20.001 — REV 1 — SHEET 1 OF 1

FILE MODEL: Beam_5.0mm_screw.prt
FILE DRAWING: Beam_5.0mm_dwg.prt

THIS IS A CAD DRAWING NO MANUAL ALTERATION

ALL RIGHTS RESERVED - COPYRIGHT ACC. ~~ISO DIN 34~~

ECO - 00008

ANNEX A 2/3

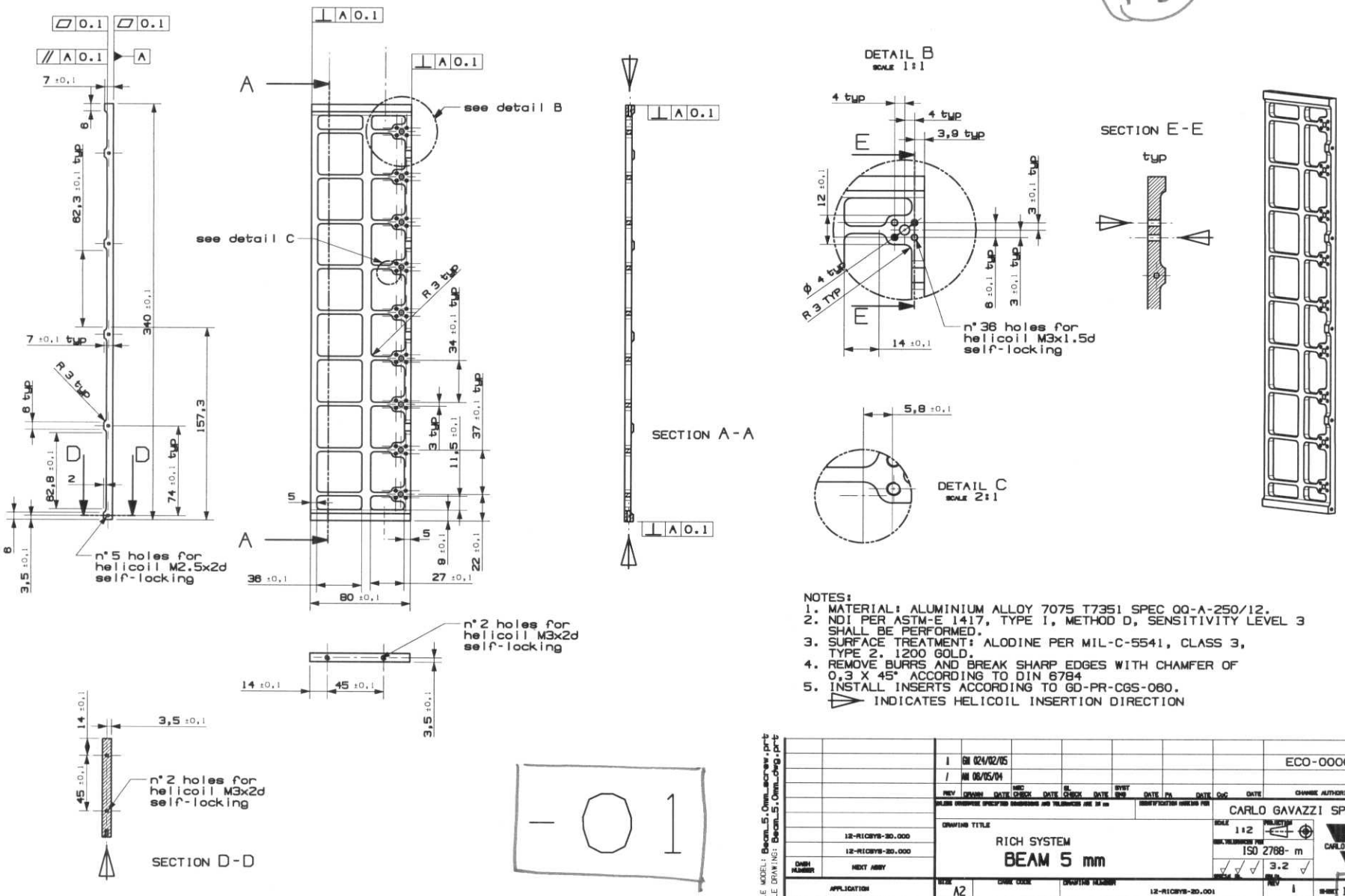

NOTES:
1. MATERIAL: ALUMINIUM ALLOY 7075 T7351 SPEC QQ-A-250/12.
2. NDI PER ASTM-E 1417, TYPE I, METHOD D, SENSITIVITY LEVEL 3 SHALL BE PERFORMED.
3. SURFACE TREATMENT: ALODINE PER MIL-C-5541, CLASS 3, TYPE 2. 1200 GOLD.
4. REMOVE BURRS AND BREAK SHARP EDGES WITH CHAMFER OF 0,3 X 45° ACCORDING TO DIN 6784
5. INSTALL INSERTS ACCORDING TO GD-PR-CGS-060.
   INDICATES HELICOIL INSERTION DIRECTION

REV	DRAWN	DATE	CHECK	DATE	CHECK	DATE	SYST ENG	DATE	PA	DATE	QuG	DATE	CHANGE AUTHORITY
I	GM	024/02/05											ECO-00008
/	MM	06/05/04											

UNLESS OTHERWISE SPECIFIED DIMENSIONS AND TOLERANCES ARE IN mm

IDENTIFICATION MARKING PER

CARLO GAVAZZI SPACE

DRAWING TITLE

RICH SYSTEM

BEAM 5 mm

SCALE 1:2

PROJECTION

GEN. TOLERANCES PER ISO 2768- m

3.2

12-RICSYS-30.000

12-RICSYS-20.000

DASH NUMBER

NEXT ASSY

APPLICATION

SIZE A2

CAGE CODE

DRAWING NUMBER 12-RICSYS-20.001

REV I

SHEET 1 OF 2

FILE MODEL: Beam_5.0mm_screw.prt

FILE DRAWING: Beam_5.0mm_dwg.prt

THIS IS A CAD DRAWING NO MANUAL ALTERATION

ALL RIGHTS RESERVED - COPYRIGHT ACC. TO DIN 34

ECO -00008

ANNEX A 3/3

ALL OTHER DIMESIONS AND NOTES AS -01

is

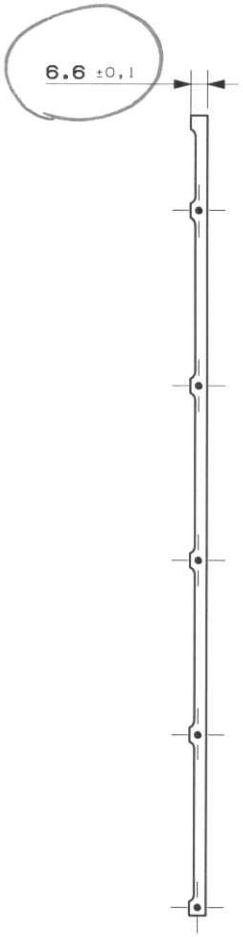

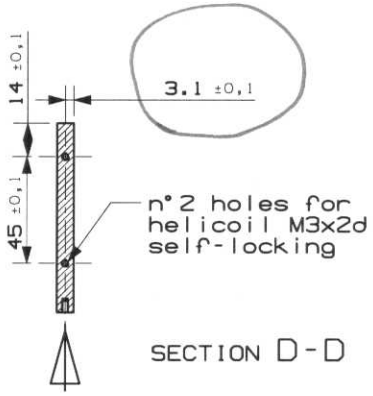

SEE SHEET ONE FOR DRAWINGS NOTES.

-02

FILE MODEL: Beam_5.0mm_screw.prt
FILE DRAWING: Beam_5.0mm_screw_revA_dwg.prt

REV	DRAWN	DATE	MEC CHECK	DATE	EL CHECK	DATE	SYST ENG	DATE	PA	DATE	CoC	DATE	CHANGE AUTHORITY
A	GM	24/02/05											ECO-00008
/	AM	08/05/04											

UNLESS OTHERWISE SPECIFIED DIMENSIONS AND TOLERANCES ARE IN mm

IDENTIFICATION MARKING PER

CARLO GAVAZZI SPACE

DRAWING TITLE

RICH SYSTEM
BEAM 5 mm

SCALE 1:2

PROJECTION

GEN. TOLERANCES PER ISO 2768- m

SPECIAL RQ. √ √ √

GEN. RQ. 3.2 √

CARLO GAVAZZI

DASH NUMBER	NEXT ASSY
	12-RICSYS-30.000
	12-RICSYS-20.000

APPLICATION

SIZE A3 | CAGE CODE | DRAWING NUMBER 12-RICSYS-20.001 | REV A

SHEET 2 OF 2

THIS IS A CAD DRAWING NO MANUAL ALTERATION

ALL RIGHTS RESERVED - COPYRIGHT ACC. TO DIN 34