12-RICSYS-30.000 / 1/4

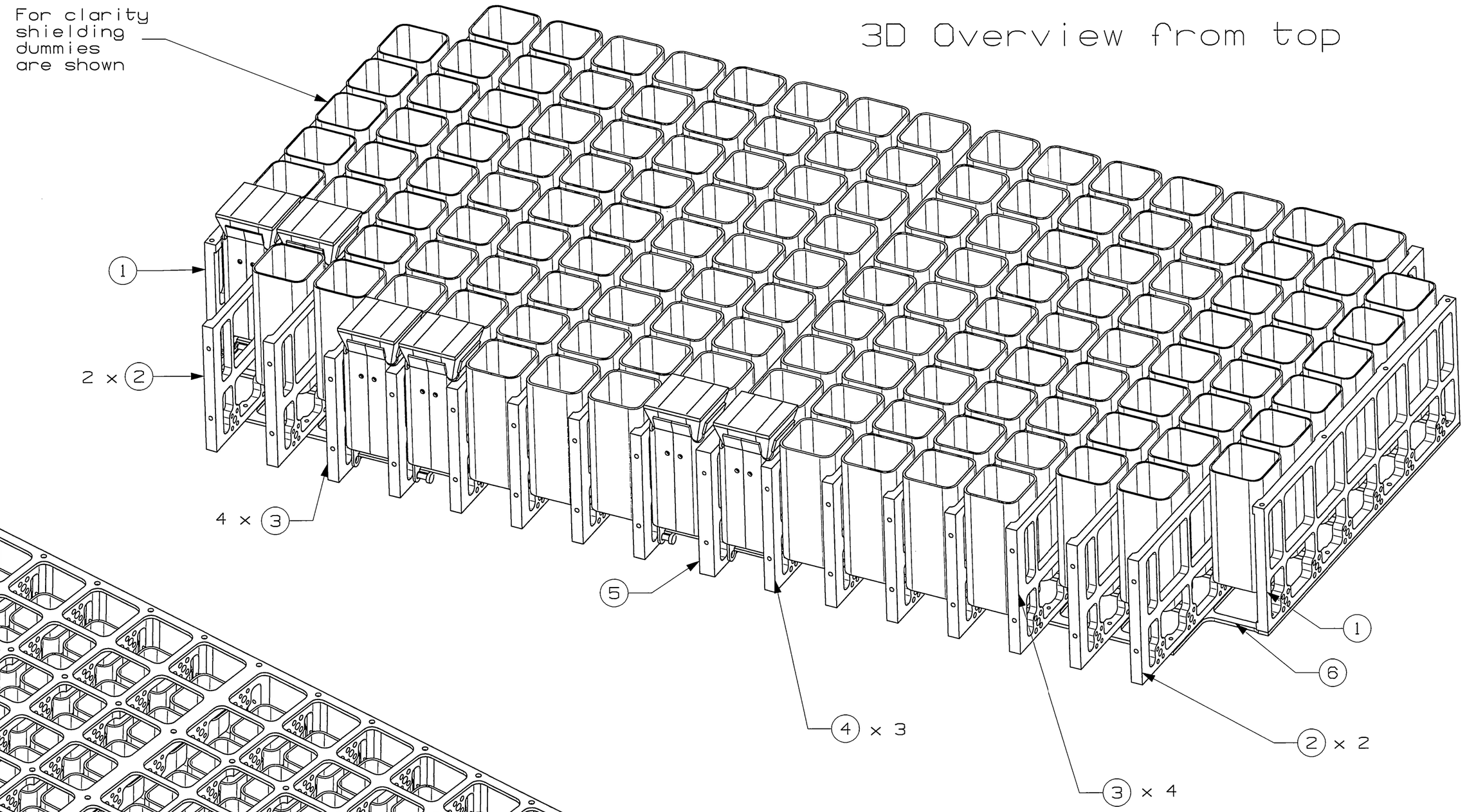

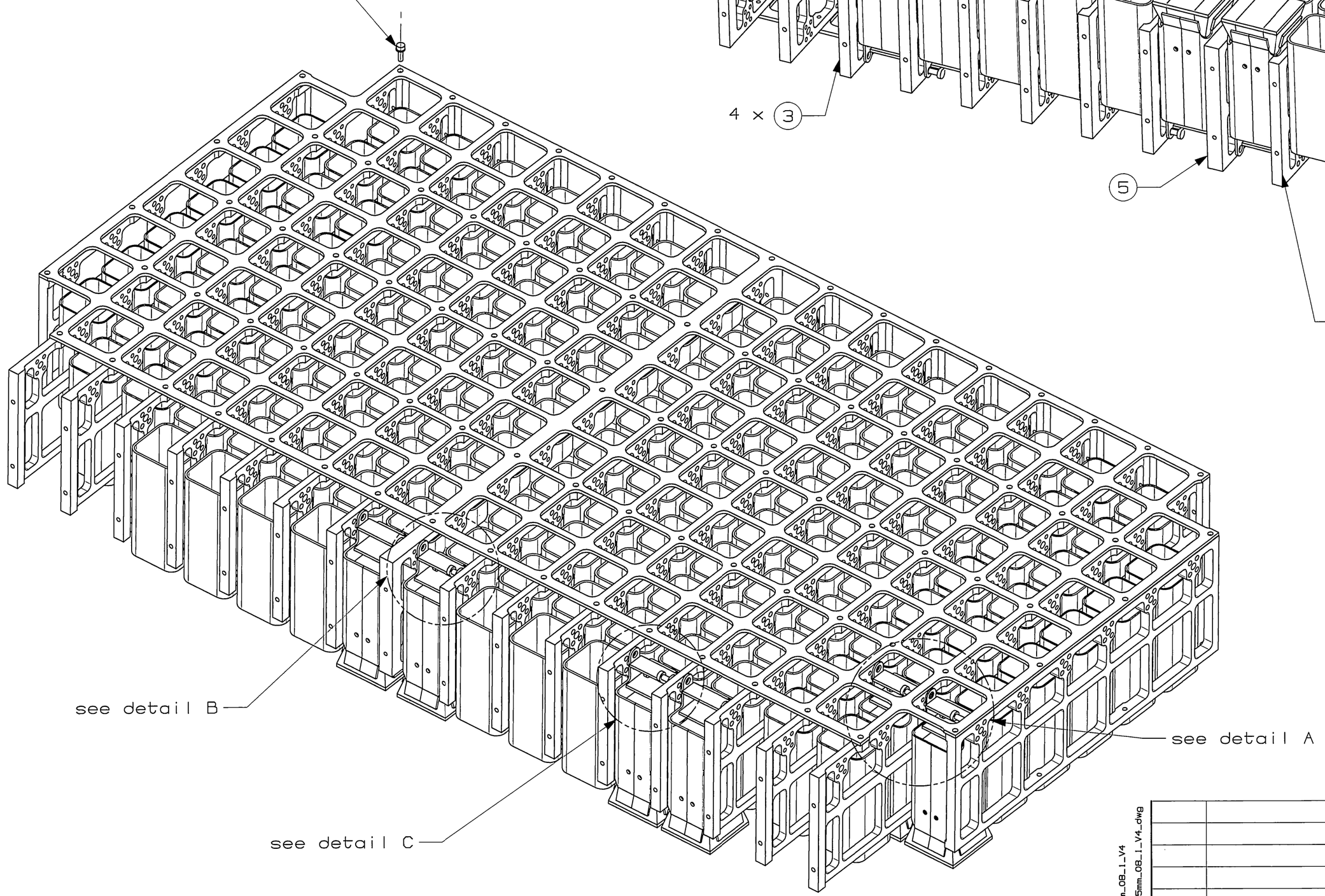

Notes:

- REFERE TO DOCUMENT RICSYS-PR-CGS-010 FOR THE ASSEMBLING PROCEDURE
- TORQUE ITEM 11 TO 0.75 Nm ACC. TO GD-WI-CGS-010
- TORQUE ITEM 12 TO 0.75 Nm ACC. TO GD-WI-CGS-010

3D Overview from bottom

FILE MODEL: rect_assy_5mm_08_1_V4
FILE DRAWING: rect_assy_5mm_08_1_V4.dwg

REV	DRAWN	DATE	MEC CHECK	DATE	EL CHECK	DATE	SYST ENG	DATE	PA	DATE	CoC	DATE	CHANGE AUTHORITY
/	14-07-04 AM				N.A.			16/7/04					

UNLESS OTHERWISE SPECIFIED DIMENSIONS AND TOLERANCES ARE IN mm

IDENTIFICATION MARKING PER

CARLO GAVAZZI SPACE

DRAWING TITLE

RICH SYSTEM
GRIGLIA Y ASSY

SCALE 1:2

PROJECTION

GEN.TOLERANCES PER ISO 2768-mK

SPECIAL RA.

GEN.RA. NA

CARLO GAVAZZI

DASH NUMBER	NEXT ASSY
-01	11-RICSYS-00.000

APPLICATION

SIZE A2 | CAGE CODE | DRAWING NUMBER 12-RICSYS-30.000 | REV / | SHEET 1 OF 4

THIS IS A CAD DRAWING NO MANUAL ALTERATION

ALL RIGHTS RESERVED - COPYRIGHT ACC. TO DIN 34