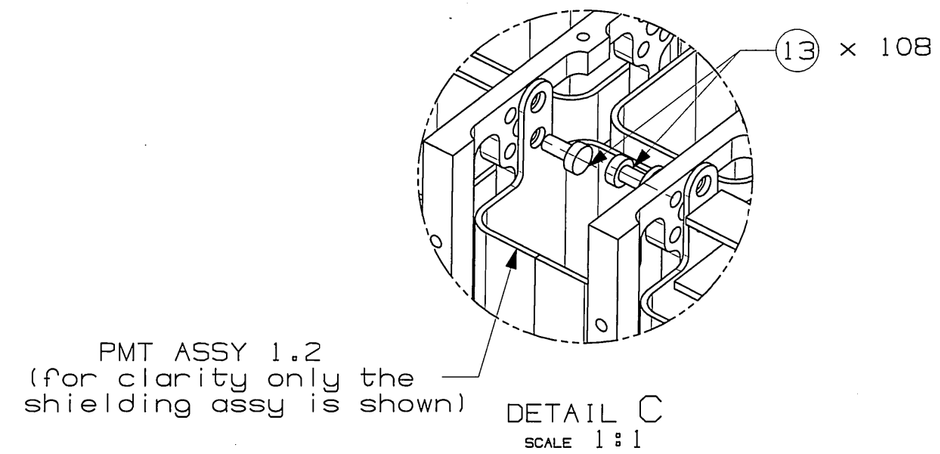

DETAIL C
SCALE 1:1

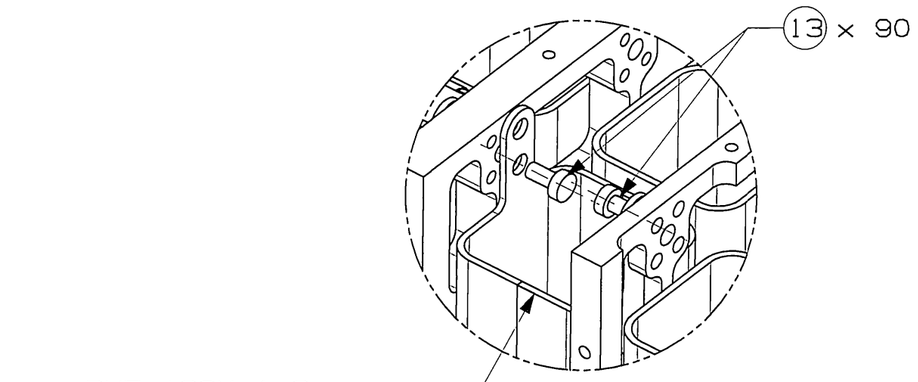

DETAIL B
SCALE 1:1

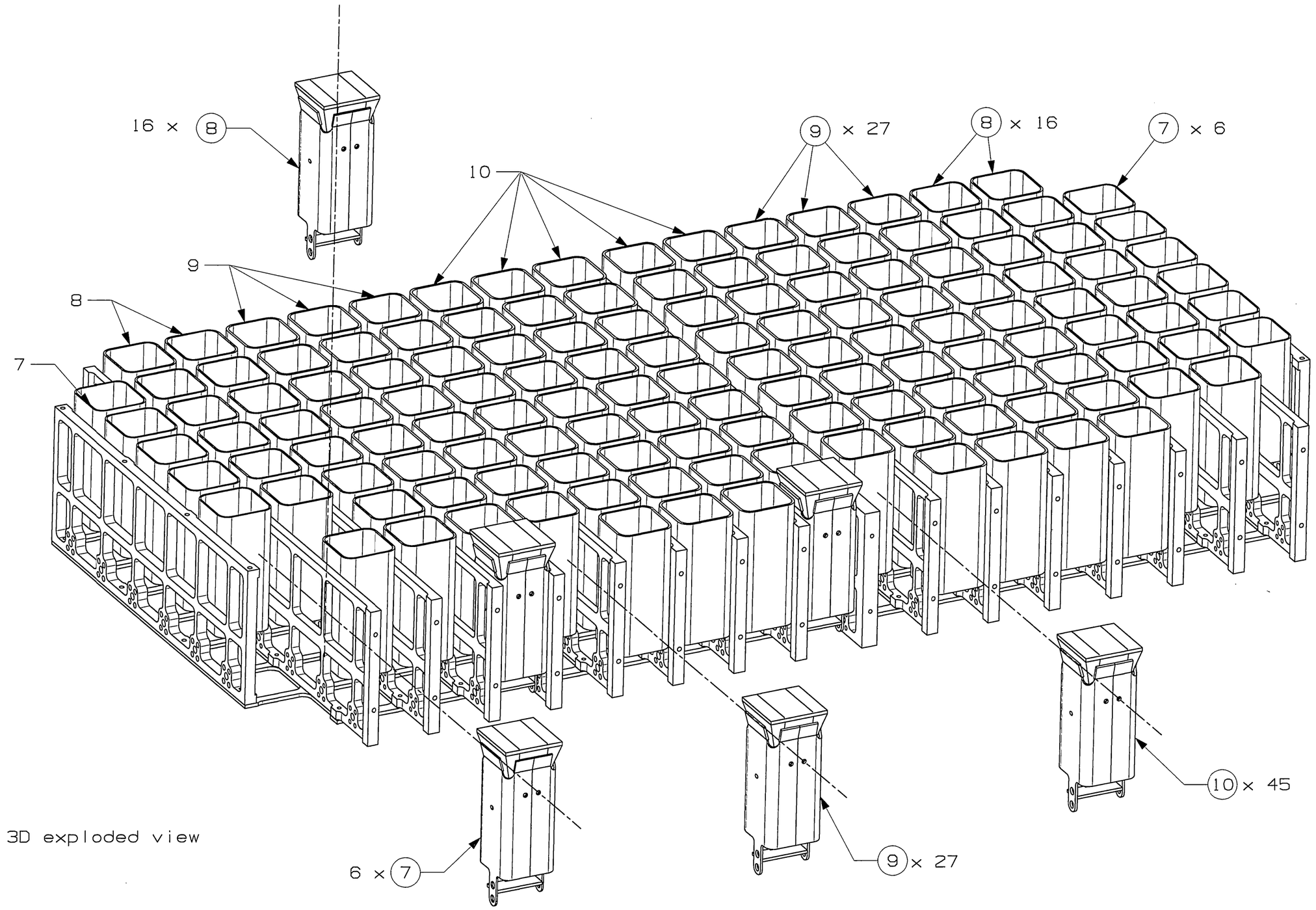

3D exploded view

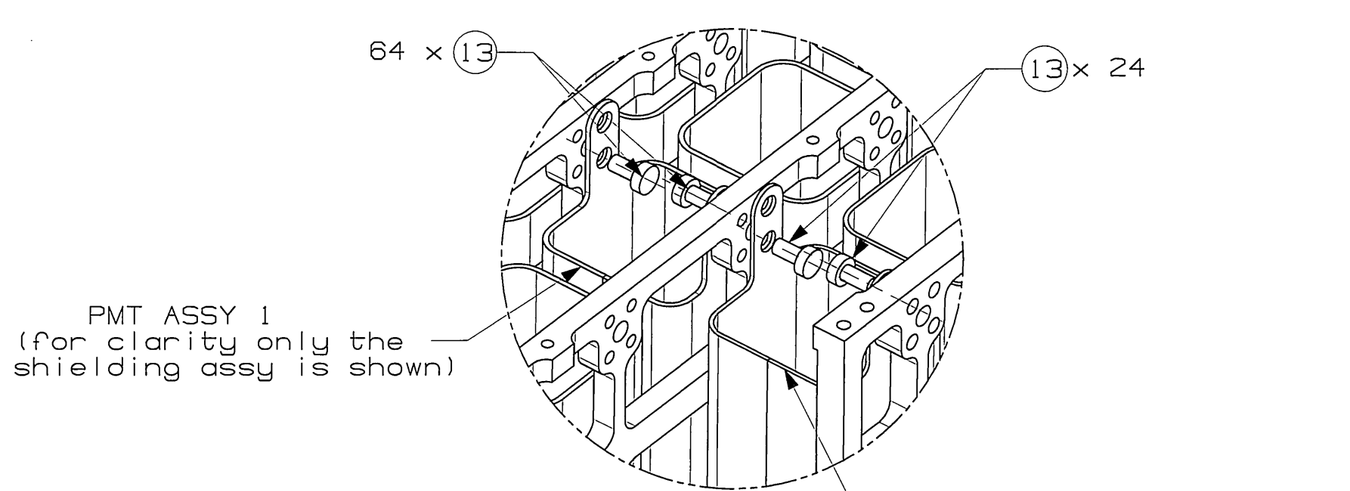

DETAIL A
SCALE 1:1

FOR CLARITY ITEM 6 WAS REMOVED FROM DETAILS A, B AND C

REV	DRAWN	DATE	MEC CHECK	DATE	EL CHECK	DATE	SYST ENG	DATE	PA	DATE	CoC	DATE	CHANGE AUTHORITY
/	14-07-04 AM			14/7/04	N.A.			14/7/04		16/7/04		16/7/4	

UNLESS OTHERWISE SPECIFIED DIMENSIONS AND TOLERANCES ARE IN mm

IDENTIFICATION MARKING PER

CARLO GAVAZZI SPACE

DRAWING TITLE

RICH SYSTEM
GRIGLIA Y ASSY

SCALE NA

PROJECTION

GEN. TOLERANCES PER ISO 2768-mA

SPECIAL RA. NA

GEN. RA.

CARLO GAVAZZI

DASH NUMBER	NEXT ASSY
-01	11-RICSYS-00.000

APPLICATION

SIZE A2 | CAGE CODE | DRAWING NUMBER 12-RICSYS-30.000 | REV / | SHEET 2 OF 4

FILE MODEL: rect_assy_5mm_08_1_V4
FILE DRAWING: rect_assy_5mm_08_1_V4.dwg

THIS IS A CAD DRAWING NO MANUAL ALTERATION

ALL RIGHTS RESERVED - COPYRIGHT ACC. TO DIN 34

12-RICSYS-30.000-1 2/4