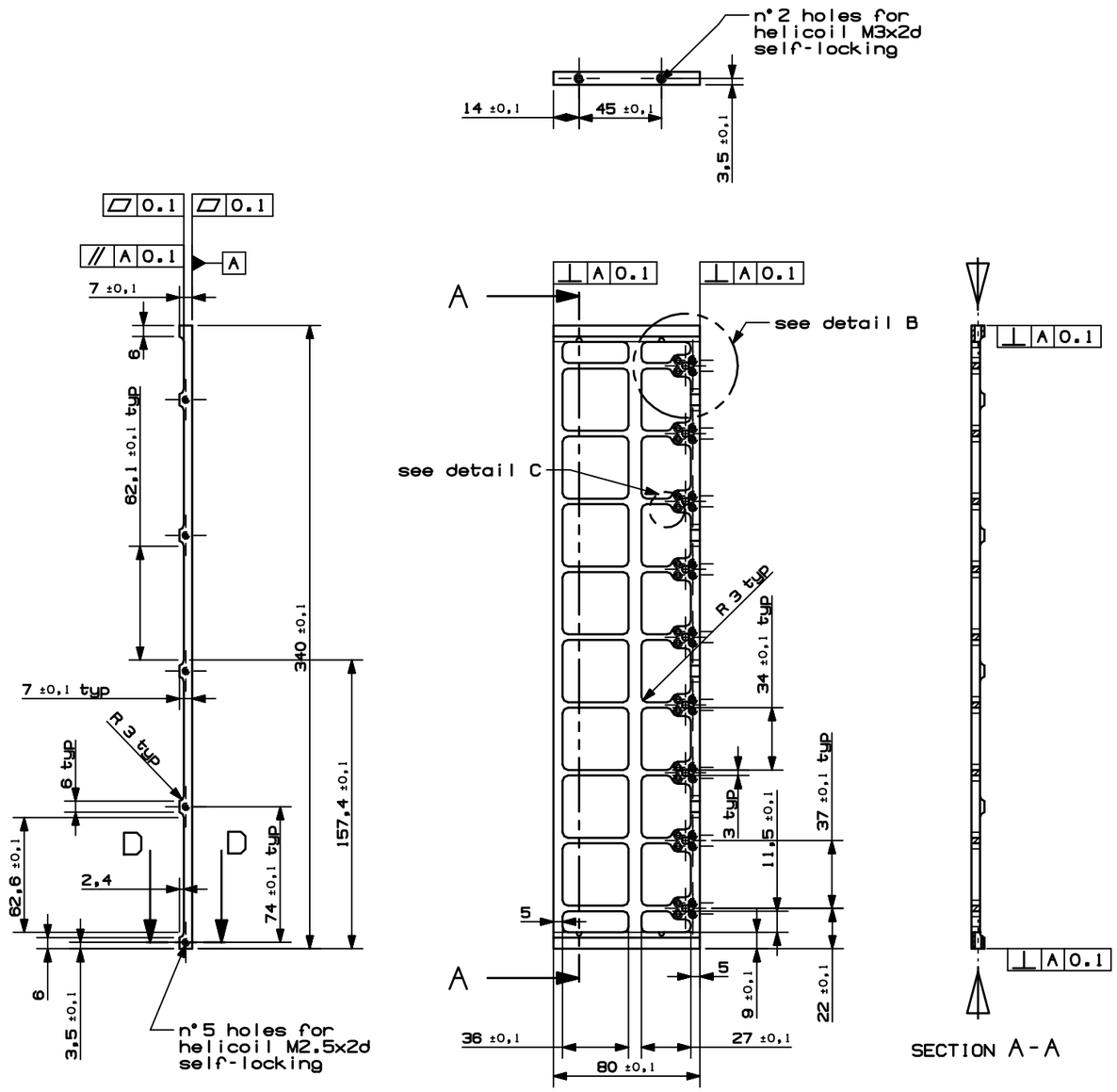

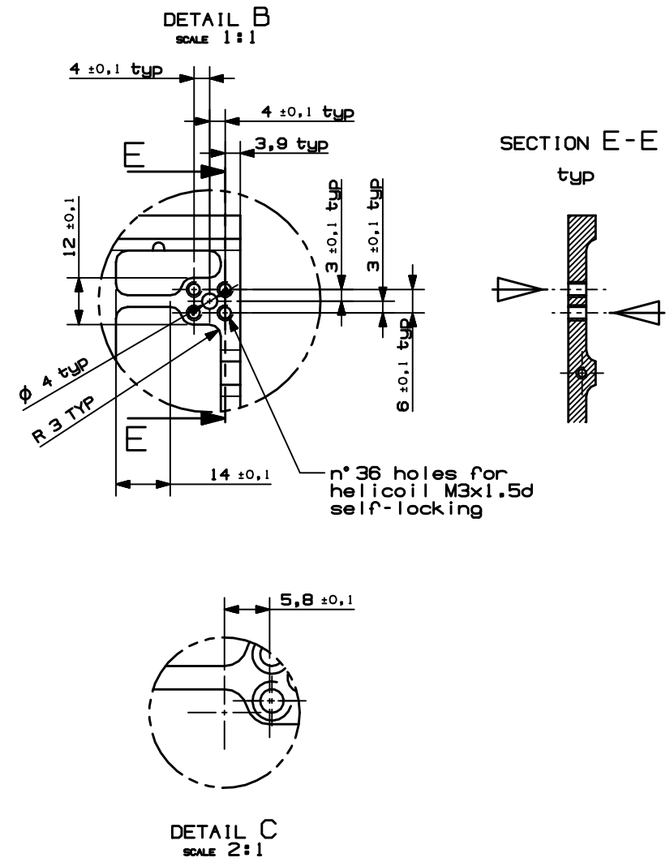

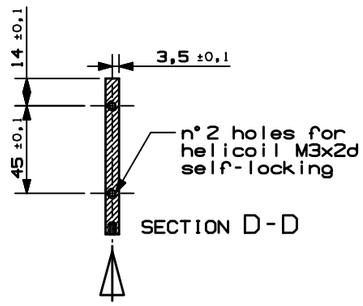

NOTES:
1. MATERIAL: ALUMINIUM ALLOY 7075 T7351 SPEC QQ-A-250/12.
2. NDI PER ASTM-E 1417, TYPE I, METHOD D, SENSITIVITY LEVEL 3 SHALL BE PERFORMED.
3. SURFACE TREATMENT: ALODINE PER MIL-C-5541, CLASS 3, TYPE 2. 1200 GOLD.
4. REMOVE BURRS AND BREAK SHARP EDGES WITH CHAMFER OF 0,3 X 45° ACCORDING TO DIN 6784
5. INSTALL INSERTS ACCORDING TO GD-PR-CGS-060.
   ▷ INDICATES HELICOIL INSERTION DIRECTION

REV	DRAWN	DATE	MEC CHECK	DATE	EL CHECK	DATE	SYST ENG	DATE	PA	DATE	CoC	DATE	CHANGE AUTHORITY
/	10/05/04	MORONI											

UNLESS OTHERWISE SPECIFIED DIMENSIONS AND TOLERANCES ARE IN mm — IDENTIFICATION MARKING PER

DRAWING TITLE: RICH SYSTEM
BEAM 4.6 mm

CARLO GAVAZZI SPACE

SCALE 1:2 — PROJECTION — GEN. TOLERANCES PER ISO 2768-m — SPECIAL RQ. — SURF. RQ. 3.2

DASH NUMBER: 12-RICSYS-30.000 — NEXT ASSY — APPLICATION

SIZE A2 — CAGE CODE — DRAWING NUMBER 12-RICSYS-30.001 — REV / — SHEET 1 OF 1

FILE MODEL: beam_4.6mm_SCREW.prt
FILE DRAWING: beam_4.6mm_dwg.prt

THIS IS A CAD DRAWING NO MANUAL ALTERATION

ALL RIGHTS RESERVED - COPYRIGHT ACC. TO DIN 34