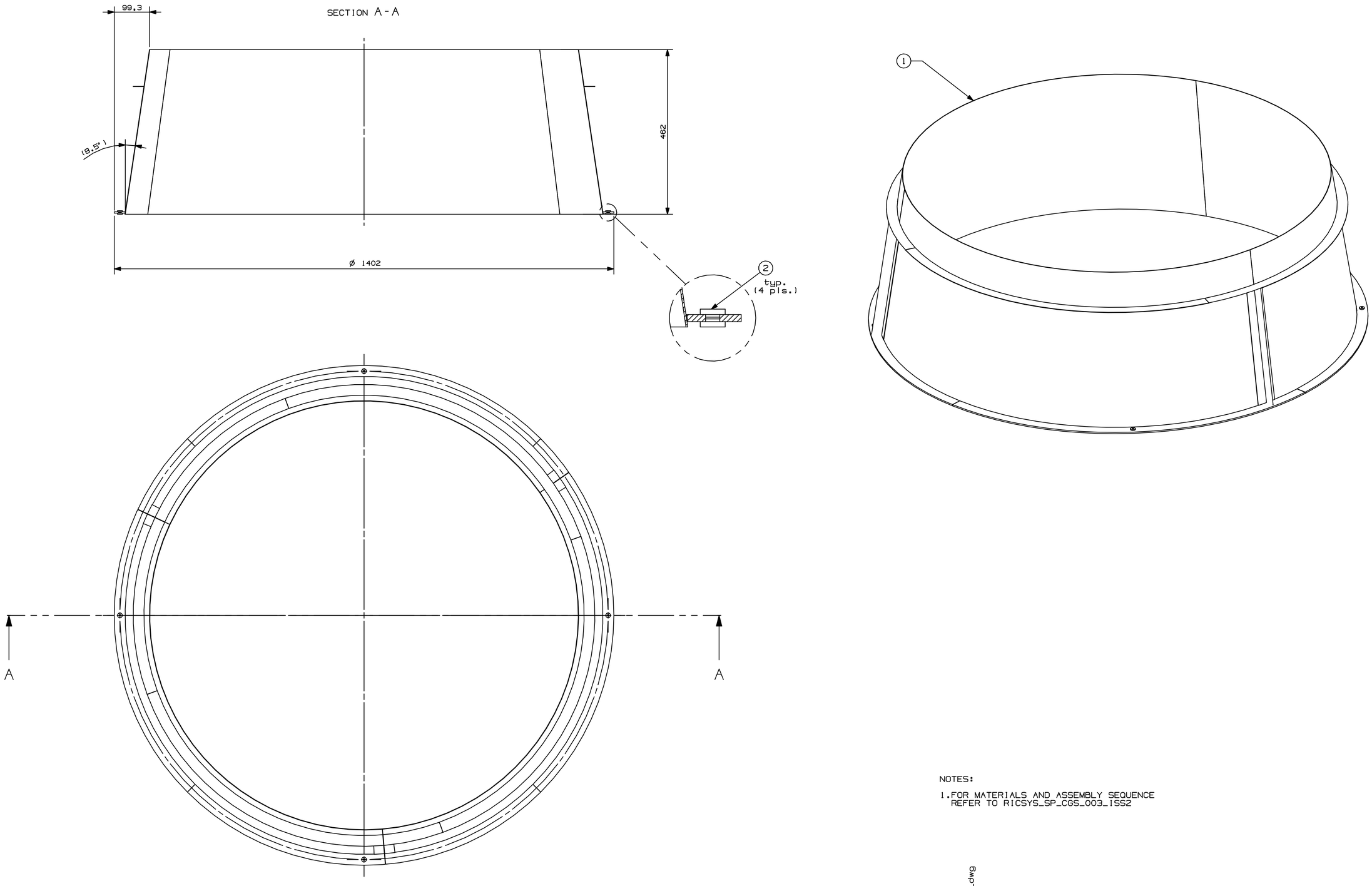

NOTES:

1. FOR MATERIALS AND ASSEMBLY SEQUENCE REFER TO RICSYS_SP_CGS_003_ISS2

FILE MODEL: carrier_assy_FM
FILE DRAWING: Reflector_Assy_dwg

REV	DRAWN	DATE	MEC CHECK	DATE	EL CHECK	DATE	SYST ENG	DATE	PA	DATE	CoC	DATE	CHANGE AUTHORITY
/	01/07/2004 GM												

UNLESS OTHERWISE SPECIFIED DIMENSIONS AND TOLERANCES ARE IN mm

IDENTIFICATION MARKING PER

CARLO GAVAZZI SPACE

DRAWING TITLE

RICH SYSTEM
REFLECTOR ASSY

SCALE 1:5

PROJECTION

GEN. TOLERANCES PER ISO 2768-

SPECIAL RQ. NA

DEBUR.

CARLO GAVAZZI

DASH NUMBER	NEXT ASSY
-01	11-RICSYS-00.000

APPLICATION

SIZE A1

CAGE CODE

DRAWING NUMBER 12-RICSYS-40.000

REV /

SHEET 1 OF 2

THIS IS A CAD DRAWING NO MANUAL ALTERATION

ALL RIGHTS RESERVED - COPYRIGHT ACC. TO DIN 34