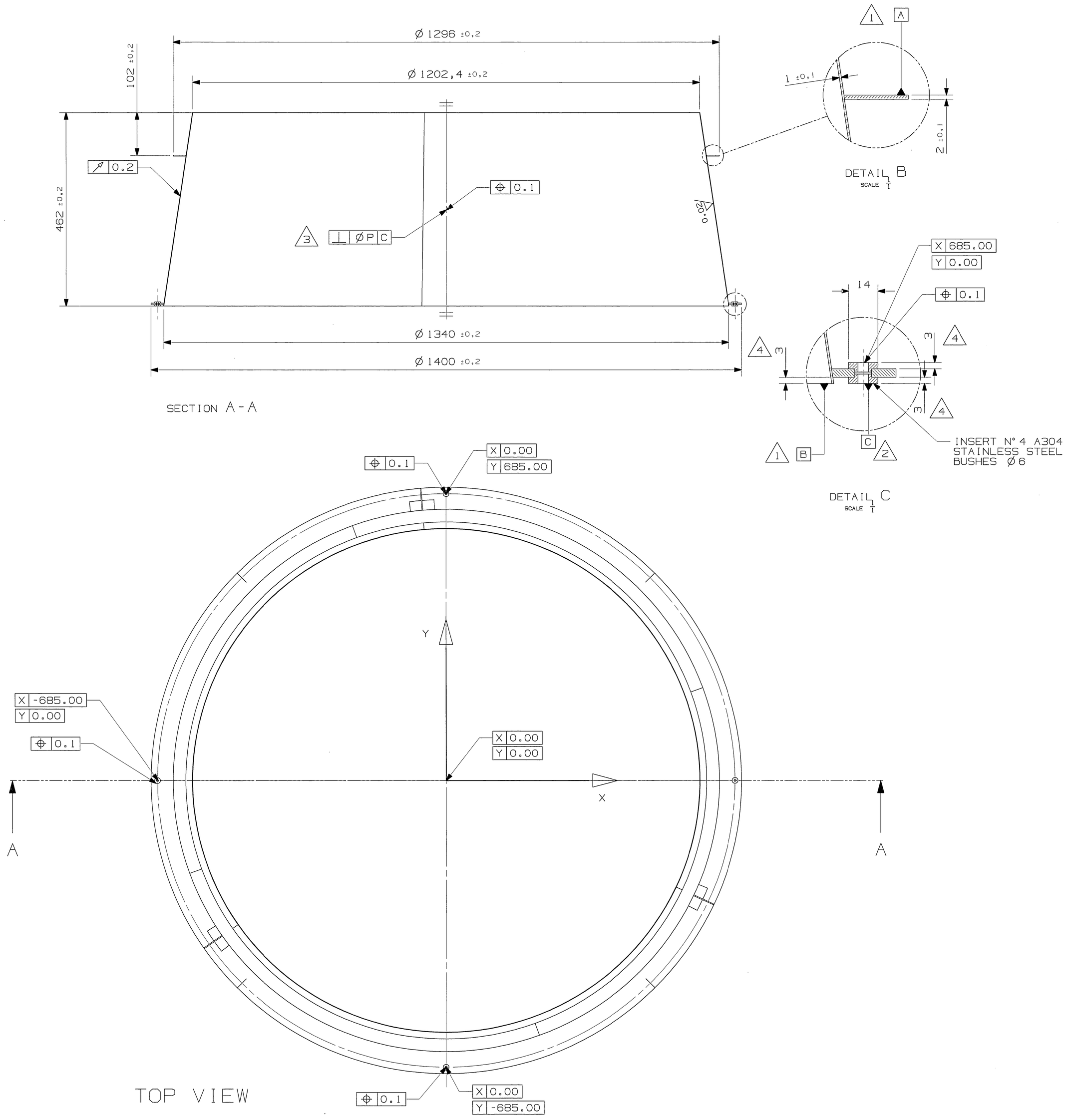

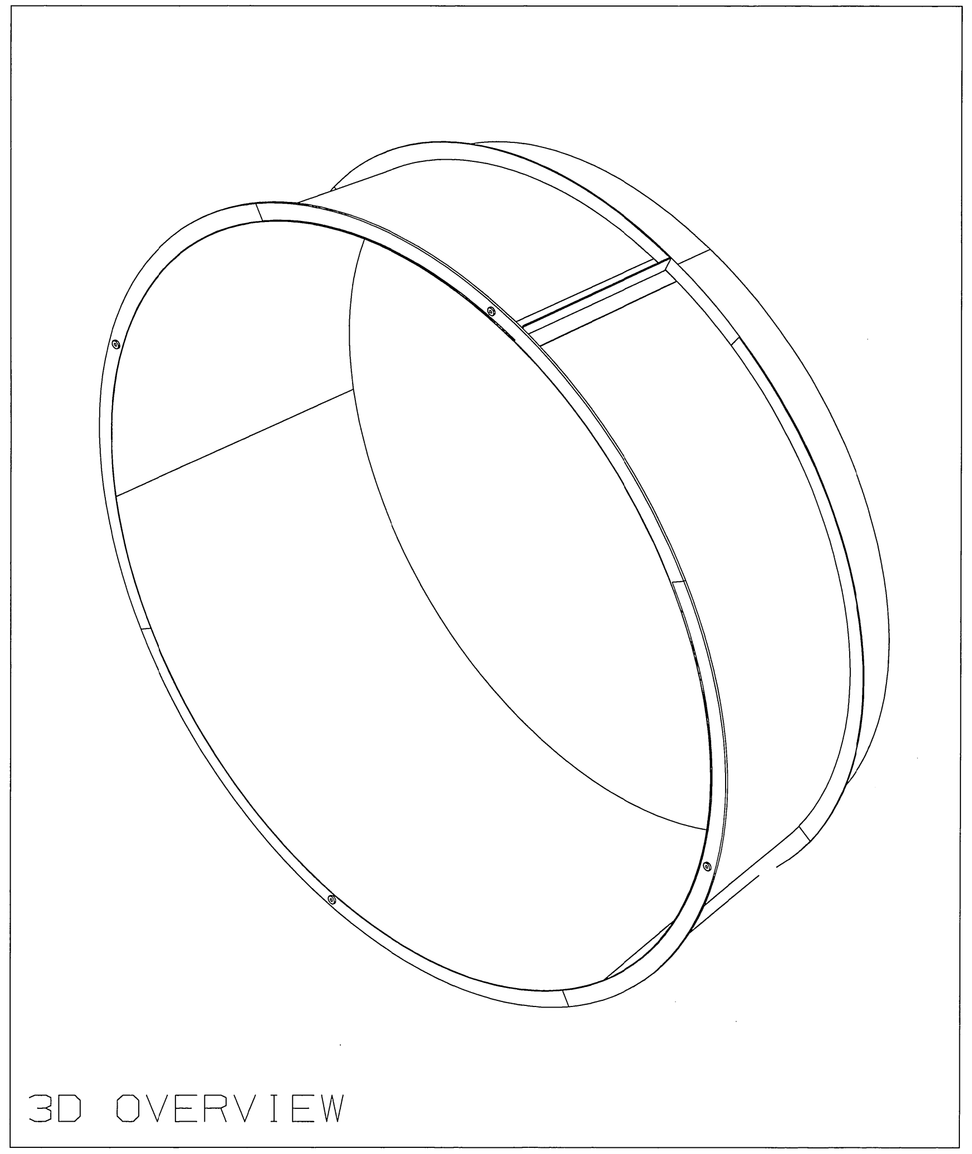

NOTES:

1. PLANARITY A , B, C = 0.5 mm
2. PLANE C IS MADE UP BY THE 4 BUSHES
3. PERPENDICULARITY P = 0.5 mm
4. ALL FLAGGED VALUES MUST BE ALL IDENTICAL

REMOVE BURRS AND BREAK SHARP EDGES

FILE MODEL: RICSYS_reflector_ICD
FILE DRAWING: 12-RICSYS-40.001_dwg

REV	DRAWN	DATE	MEC CHECK	DATE	EL CHECK	DATE	SYST ENG	DATE	PA	DATE	CoC	DATE	CHANGE AUTHORITY
1	SARDO	19-07-2004	[signature]	28.07.04	N.A.		[signature]	28.07.04	J. Cecconi	28/7/4			

UNLESS OTHERWISE SPECIFIED DIMENSIONS AND TOLERANCES ARE IN mm

IDENTIFICATION MARKING PER

CARLO GAVAZZI SPACE

DRAWING TITLE

RICH SYSTEM

REFLECTOR ASSY ICD

SCALE 1 : 1

PROJECTION

GEN. TOLERANCES PER ISO 2768-m

SPECIAL RQ. 0.02 GEN.RQ. 3.2

CARLO GAVAZZI

DASH NUMBER: 11-RICSYS-00.000

NEXT ASSY

APPLICATION

SIZE A1

CAGE CODE

DRAWING NUMBER 12-RICSYS-40.001

REV 1

SHEET 1 OF 1

THIS IS A CAD DRAWING NO MANUAL ALTERATION

ALL RIGHTS RESERVED · COPYRIGHT ACC. TO DIN 34