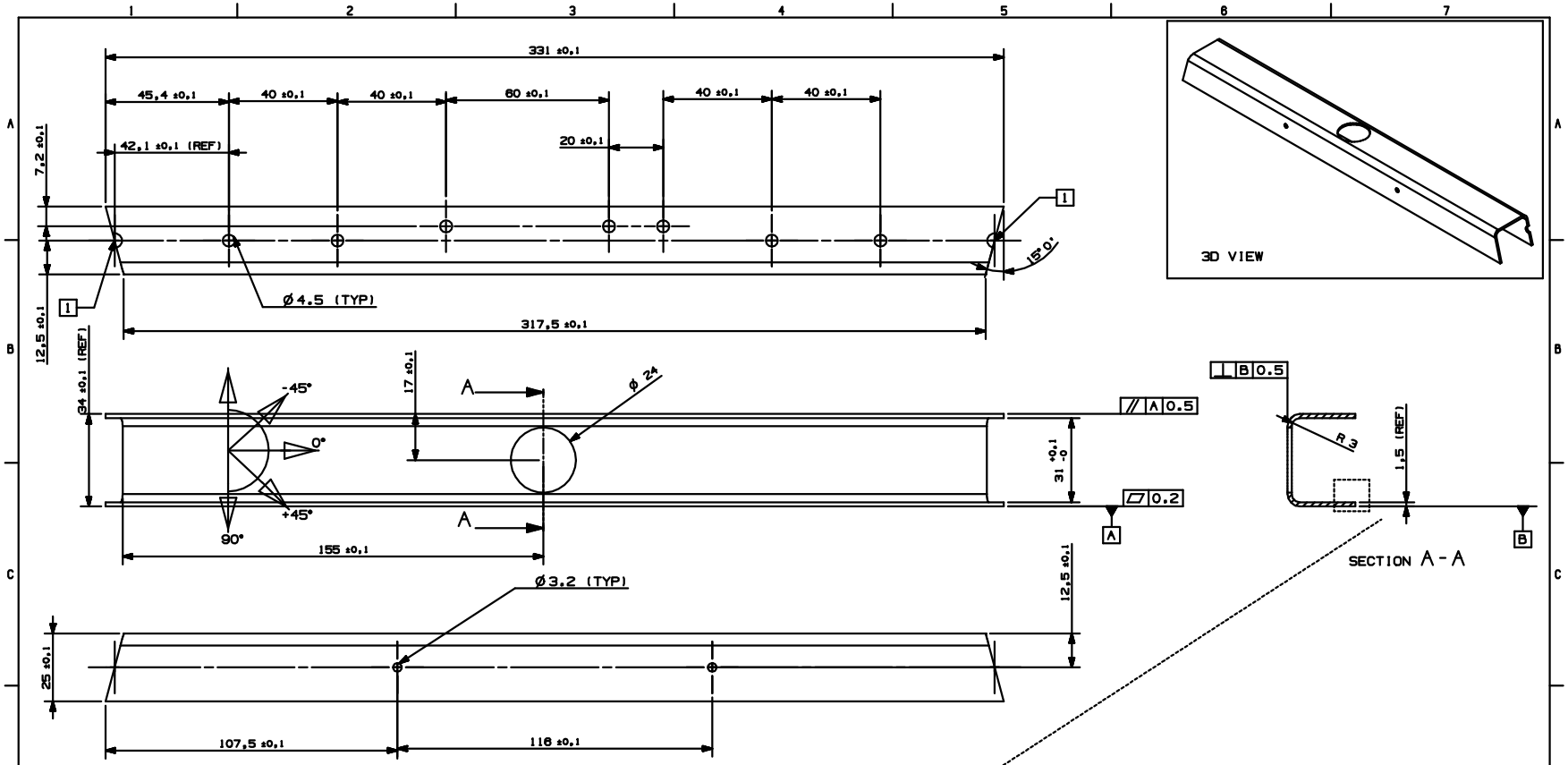

| OPERATION N° | ORIENTATION | PLY N° | ITEM N° |
|---|---|---|---|
| 6 | +45 | 6 | 1 |
| 5 | +90 | 5 | 2 |
| 4 | -45 | 4 | 1 |
| 3 | -45 | 3 | 1 |
| 2 | +90 | 2 | 2 |
| 1 | +45 | 1 | 1 |

DETAIL A
SCHEMATIC NO SCALE

NOTES:
- MATERIAL CFRP CYCOM 950-1-42%-3KHS-5H TO BE MANUFACTURED AND CURED ACCORDING TO SUPPLIER SPECIFICATIONS
- REMOVE BURRS AND BREAK SHARP EDGES ACC. TO DIN 6784
- 1 DRILL AT ASSY LEVEL (SEE DWG 12-RICSYS-50.000)
- EXTERNAL SURFACES TO BE COVERD WITH A SHEET OF AL 99% TH 25mm

FILE MODEL: ext_longeron_valve_V2_rev5
FILE DRAWING: 12-RICSYS-50.006_dwg_rev5

| REV | DRAWN | DATE | MFG CHECK | DATE | EL CHECK | DATE | SYST ENG | DATE | PA | DATE | CoC | DATE | CHANGE AUTHORITY |
|---|---|---|---|---|---|---|---|---|---|---|---|---|---|
| B | GM | 01-12-04 | | | | | | | | | | | ECO-00007 |
| A | AM | 09-11-04 | | | | | | | | | | | ECO-00002 |
| / | CM | 27-07-04 | | | | | | | | | | | |

UNLESS OTHERWISE SPECIFIED DIMENSIONS AND TOLERANCES ARE IN mm

IDENTIFICATION DRAWING FOR: CARLO GAVAZZI SPACE

DRAWING TITLE: RICH SYSTEM
EXTERNAL LONGERON 2

SCALE 1:1 | PROJECTION | GEN. TOLERANCES PER ISO 2768-m | SURFACE FINISH 3.2

DASH NUMBER: 12-RICSYS-50.000
NEXT ASSY:
APPLICATION:
SIZE A2 | CAGE CODE | DRAWING NUMBER 12-RICSYS-50.006 | REV B | SHEET 1 OF 1

THIS IS A CAD DRAWING NO MANUAL ALTERATION

ALL RIGHTS RESERVED - COPYRIGHT ACC. TO DIN 34