CARLO GAVAZZI SPACE SpA	0 RICH SYSTEM Engineering Change Order	1 ECO ref	Doc N°: **ECO-00002** Date: **09.11.04** Page **1** of **1** attach. **A**

2 DRAWING N° / REV. / TITLE:	3 SHEETS AFFECTED:
12-RICSYS-50.006 Rev / - Rich System External longeron 2	1/2

4 PREPARED BY:	5 ORIGIN:
A. MORONI	N.A.

6 REASON FOR REVISION:

3D Model modification

7 CHANGE DESCRIPTION:

- Central hole diameter shall be 24 mm instead of 15 mm

8 OTHER DRAWINGS AFFECTED:

C.C.B. DISPOSITION:

9	10 CLASS:	11 Eng. 09/11/04	12 P.A.	13 C.C.	14 Date
Approved ☒ Rejected ☐	3	[signature]	09.11.04 [signature]	[signature]	13/11/04

All information contained in this document are property of CARLO GAVAZZI SPACE SpA. All rights reserved

ANNEX A TO ECO-00002

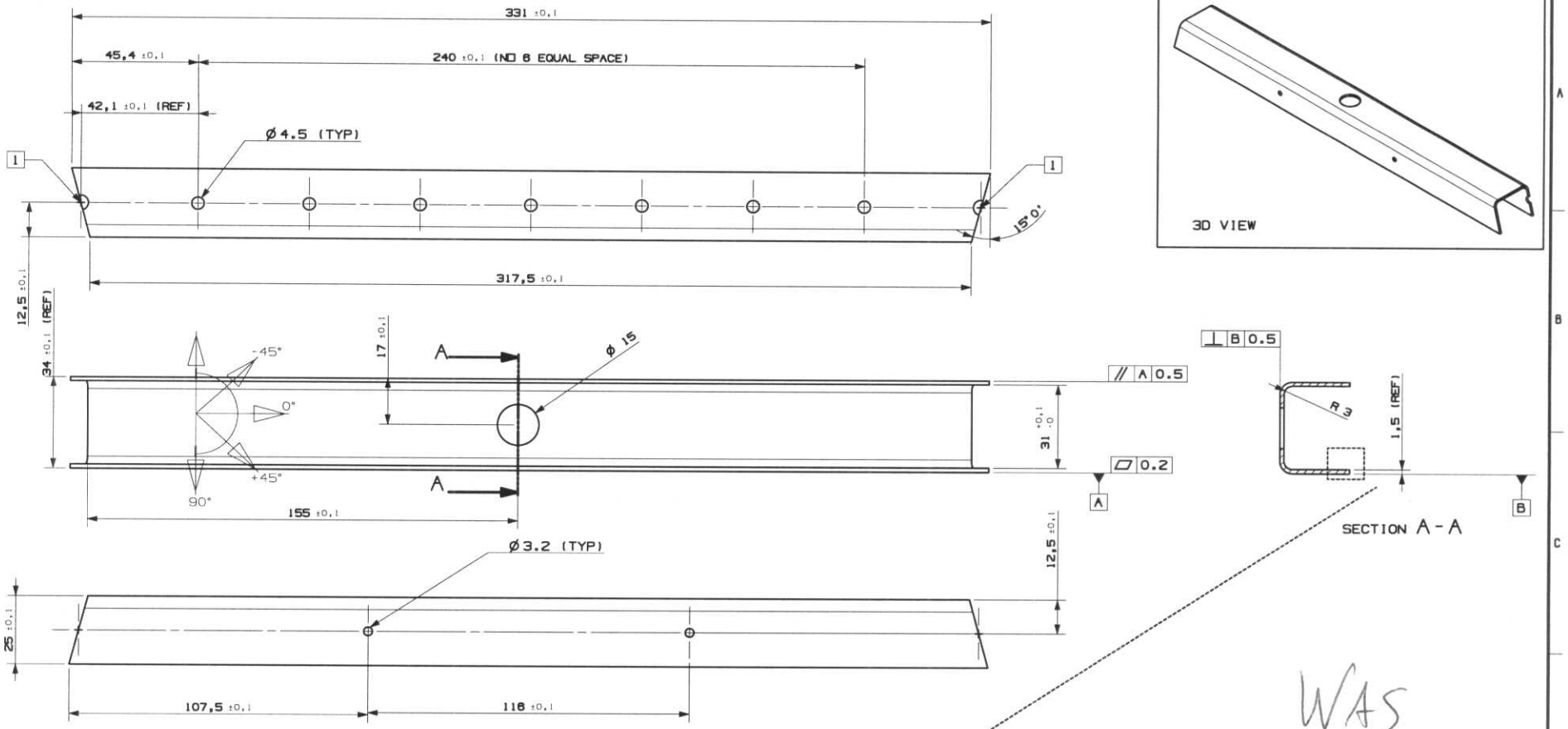

WAS

DETAIL A
SCHEMATIC NO SCALE

OPERATION N°	ORIENTATION	PLY N°	ITEM N°
6	+45	6	1
5	+90	5	2
4	-45	4	1
3	-45	3	1
2	+90	2	2
1	+45	1	1

NOTES:
- MATERIAL CFRP CYCOM 950-1-42%-3KHS-5H TO BE MANUFACTURED AND CURED ACCORDING TO SUPPLIER SPECIFICATIONS
- REMOVE BURRS AND BREAK SHARP EDGES ACC. TO DIN 6784
- [1] DRILL AT ASSY LEVEL (SEE DWG 12-RICSYS-50.000)
- EXTERNAL SURFACES TO BE COVERD WITH A SHEET OF AL 99% TH 25mm

FILE MODEL: external_longeron_valve_V2
FILE DRAWING: 12-RICSYS-50.006.dwg

REV	DRAWN	DATE	MEC CHECK	DATE	EL CHECK	DATE	SYST ENG	DATE	PA	DATE	QaC	DATE	CHANGE AUTHORITY
/	CM	27-07-04											

CARLO GAVAZZI SPACE

DRAWING TITLE
RICH SYSTEM
EXTERNAL LONGERON 2

SCALE 1:1
GEN. TOLERANCES PER ISO 2768-m
PROJECTION
DIM. IN mm
3.2

DWG NUMBER 12-RICSYS-50.000
NEXT ASSY
APPLICATION
SIZE A2
CODE
DRAWING NUMBER 12-RICSYS-50.006
REV /
SHEET 1 OF 1

THIS IS A CAD DRAWING NO MANUAL ALTERATION

ALL RIGHTS RESERVED - COPYRIGHT ACC. TO DIN 34

ANNEX A TO ECO-00002

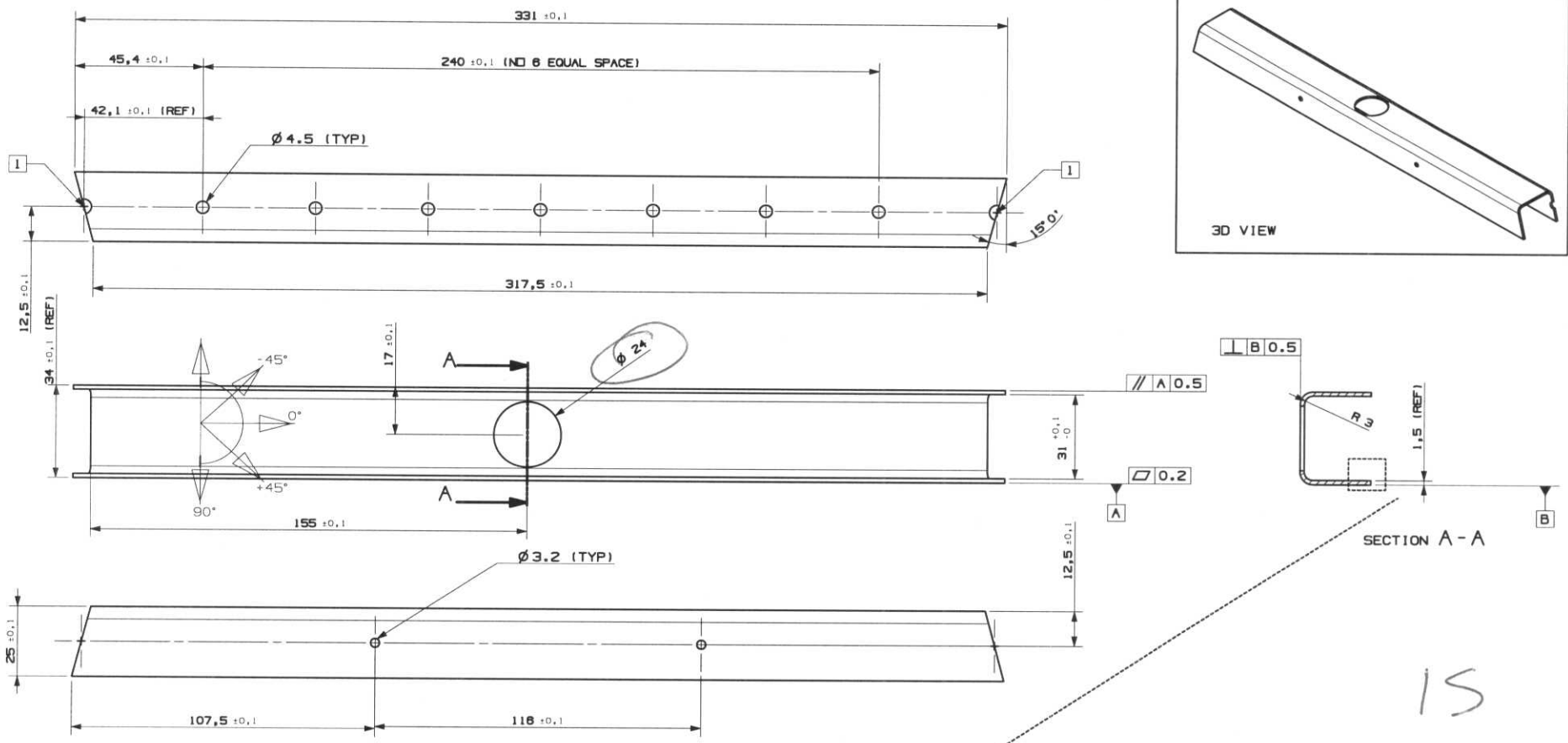

15

OPERATION N°	ORIENTATION	PLY N°	ITEM N°
6	+45	6	1
5	+90	5	2
4	-45	4	1
3	-45	3	1
2	+90	2	2
1	+45	1	1

DETAIL A
SCHEMATIC NO SCALE

NOTES:
- MATERIAL CFRP CYCOM 950-1-42%-3KHS-5H TO BE MANUFACTURED AND CURED ACCORDING TO SUPPLIER SPECIFICATIONS
- REMOVE BURRS AND BREAK SHARP EDGES ACC. TO DIN 6784
- [1] DRILL AT ASSY LEVEL (SEE DWG 12-RICSYS-50.000)
- EXTERNAL SURFACES TO BE COVERD WITH A SHEET OF AL 99% TH 25mm

FILE MODEL: ext_longeron_valve_V2_revA
FILE DRAWING: 12-RICSYS-50.006_dwg_revA

REV	DRAWN	DATE	MSC CHECK	DATE	EL CHECK	DATE	SYST ENG	DATE	PA	DATE	CoC	DATE	CHANGE AUTHORITY
A	AM	09-11-04											ECO-00002
/	CM	27-07-04											

CARLO GAVAZZI SPACE

DRAWING TITLE: RICH SYSTEM
EXTERNAL LONGERON 2

SCALE 1:1 — PROJECTION — ISO 2768-m — 3.2

DASH NUMBER: 12-RICSYS-50.000 — NEXT ASSY — APPLICATION

SIZE A2 — CAGE CODE — DRAWING NUMBER 12-RICSYS-50.006 — REV A — SHEET 1 OF 1

THIS IS A CAD DRAWING NO MANUAL ALTERATION

ALL RIGHTS RESERVED - COPYRIGHT ACC. TO DIN 34