CARLO GAVAZZI CARLO GAVAZZI SPACE SpA	0 **RICH System** **Engineering Change Order**	1 ECO ref	Doc N°: **ECO-00007** Date: **01.12.04** Page **1** of **1** attach. **- ANNEX A**

2 **DRAWING N° / REV. / TITLE:**
12-RICSYS-50.006 rev A - RICH SYSTEM EXTERNAL LONGERON 2

3 **SHEETS AFFECTED:**
1/1

4 **PREPARED BY:**
SARDO

5 **ORIGIN:**

6 **REASON FOR REVISION:**
INTERFERENCE BETWEEN FIXATION SCREWS AND RICH REFLECTOR

7 **CHANGE DESCRIPTION:**

- 3 CENTRAL HOLES ARE SHIFTED TOWARDS EXTERNAL EDGE
- THE CENTRAL HOLE OF THE AFOREMENTIONED ONES IS ALSO SHIFTED LATERALLY

8 **OTHER DRAWINGS AFFECTED:**

C.C.B. DISPOSITION:

9	10 CLASS:	11 Eng.	12 P.A.	13 C.C.	14 Date
Approved ☒ Rejected ☐	3	1/12/04	13/12/04		13/12/04

All information contained in this document are property of CARLO GAVAZZI SPACE SpA. All rights reserved

Mod. N° ECO-10/01 (Instructions: doc. GD-WI-CGS-003)

ANNEX A TO ECO-00007

1/2

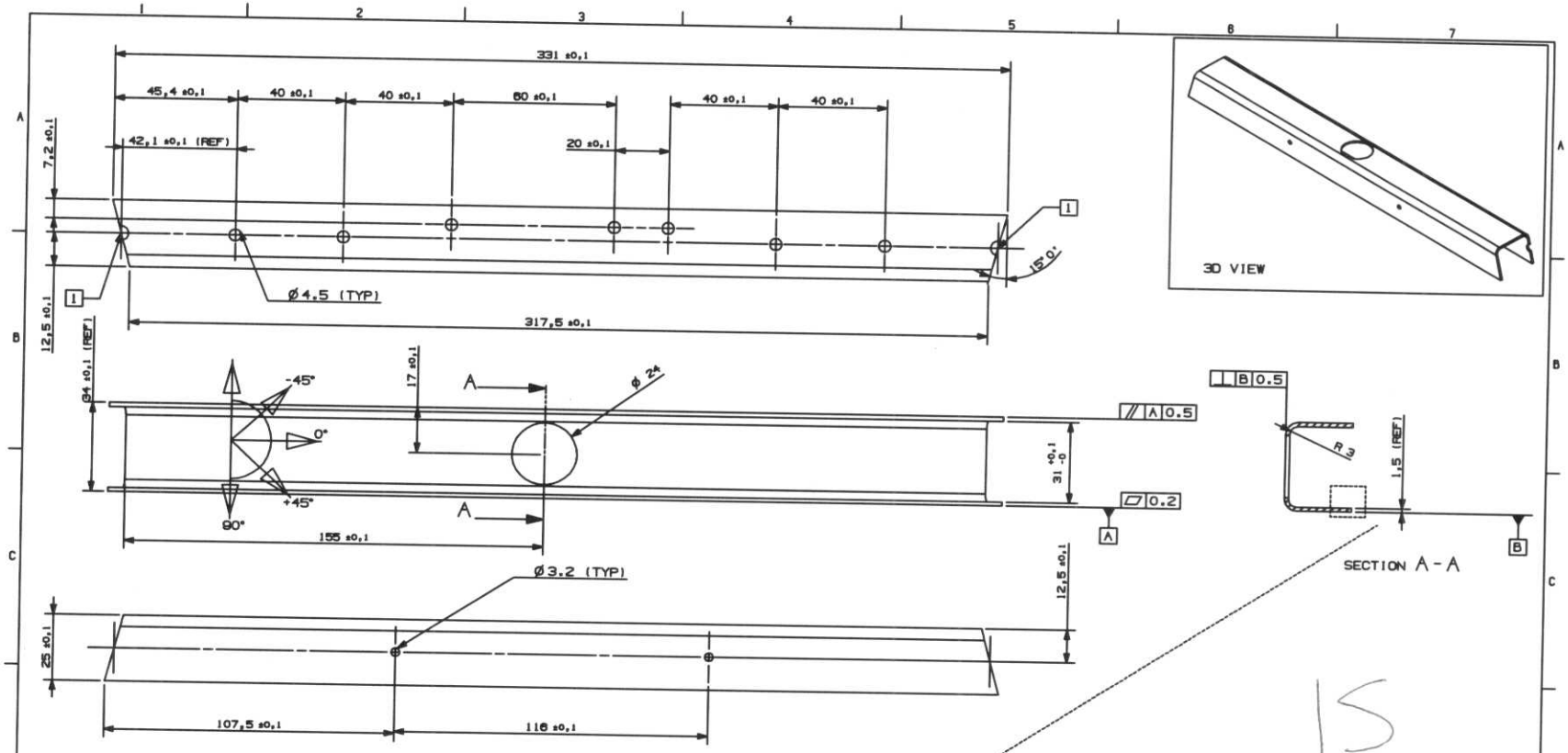

15

OPERATION N°	ORIENTATION	PLY N°	ITEM N°
6	+45	6	1
5	+90	5	2
4	-45	4	1
3	-45	3	1
2	+90	2	2
1	+45	1	1

DETAIL A
SCHEMATIC NO SCALE

NOTES:
- MATERIAL CFRP CYCOM 950-1-42%-3KHS-5H TO BE MANUFACTURED AND CURED ACCORDING TO SUPPLIER SPECIFICATIONS
- REMOVE BURRS AND BREAK SHARP EDGES ACC. TO DIN 6784
- [1] DRILL AT ASSY LEVEL (SEE DWG 12-RICSYS-50.000)
- EXTERNAL SURFACES TO BE COVERD WITH A SHEET OF AL 99% TH 25mm

FILE MODEL: ext_longeron_valve_V2_rev6
FILE DRAWING: 12-RICSYS-50.006_dwg_rev6

REV	DRAWN	DATE	CHECK	DATE	CHECK	DATE	SHEET DWG	DATE	PA	DATE	DoC	DATE	CHANGE AUTHORITY
B	GM	01-12-04											ECO-00007
A	AM	08-11-04											ECO-00002
1	GM	27-07-04											

UNLESS OTHERWISE SPECIFIED DIMENSIONS AND TOLERANCES ARE IN mm

DRAWING TITLE: RICH SYSTEM
EXTERNAL LONGERON 2

DASH NUMBER: 12-RICSYS-50.000
NEXT ASSY
APPLICATION

SCALE 1:1
MATERIAL: ISO 2768-m
3.2
SIZE A2
CAGE CODE
DRAWING NUMBER 12-RICSYS-50.006
REV B
SHEET 1 OF 1

CARLO GAVAZZI SPACE

THIS IS A CAD DRAWING NO MANUAL ALTERATION

ALL RIGHTS RESERVED - COPYRIGHT ACC. TO DIN 34

ANNEX A TO ECO-00007

2/2

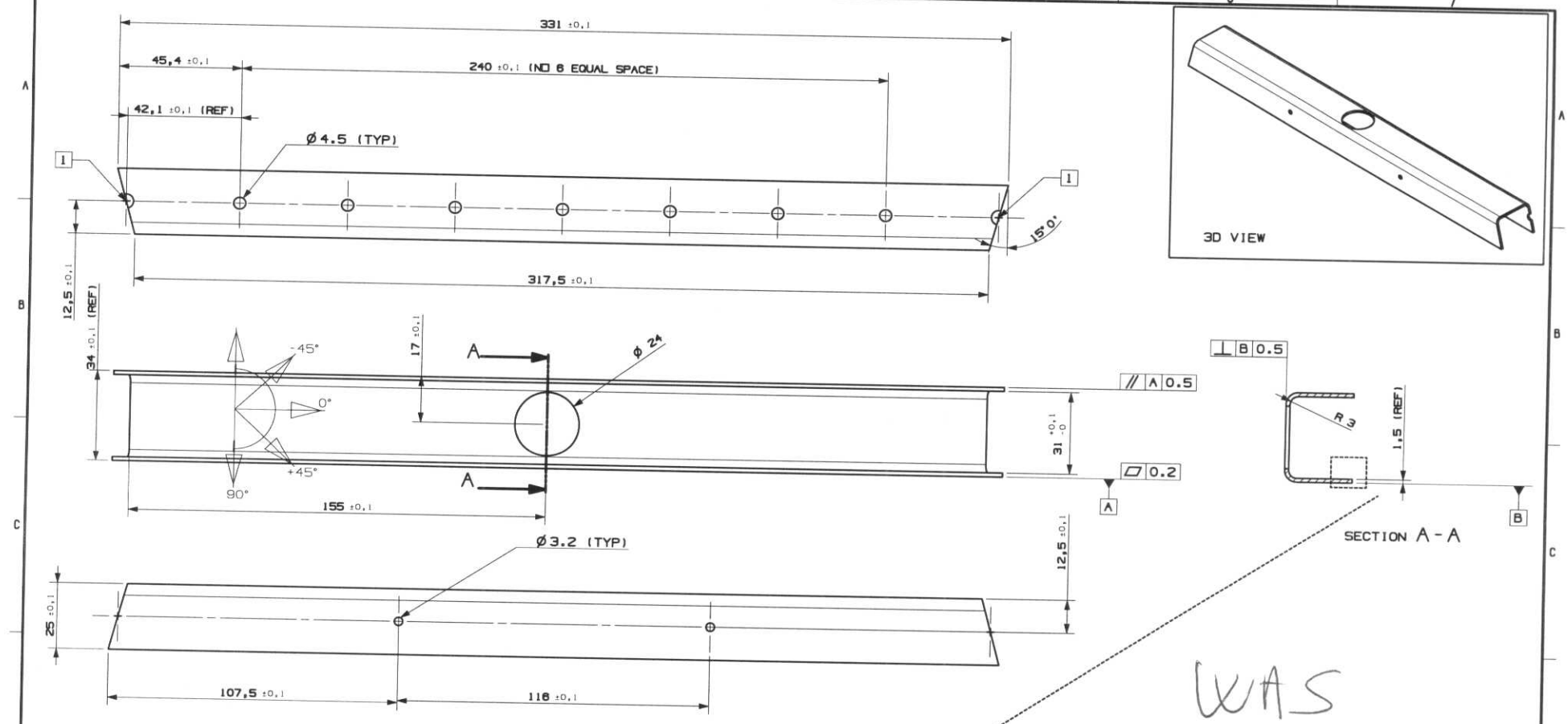

WAS

OPERATION N°	ORIENTATION	PLY N°	ITEM N°
6	+45	6	1
5	+90	5	2
4	-45	4	1
3	-45	3	1
2	+90	2	2
1	+45	1	1

DETAIL A
SCHEMATIC NO SCALE

NOTES:
- MATERIAL CFRP CYCOM 950-1-42%-3KHS-5H TO BE MANUFACTURED AND CURED ACCORDING TO SUPPLIER SPECIFICATIONS
- REMOVE BURRS AND BREAK SHARP EDGES ACC. TO DIN 6784
- 1 DRILL AT ASSY LEVEL (SEE DWG 12-RICSYS-50.000)
- EXTERNAL SURFACES TO BE COVERD WITH A SHEET OF AL 99% TH 25mm

FILE MODEL: ext_longeron_valve_V2_revA
FILE DRAWING: 12-RICSYS-50.006_dwg_revA

REV	DRAWN	DATE	MFG CHECK	DATE	SL CHECK	DATE	SYST ENG	DATE	PA	DATE	QuC	DATE	CHANGE AUTHORITY
A	AM	09-11-04											ECO-00002
/	CM	27-07-04											

UNLESS OTHERWISE SPECIFIED DIMENSIONS AND TOLERANCES ARE IN mm — IDENTIFICATION MARKING PER

CARLO GAVAZZI SPACE

DRAWING TITLE: RICH SYSTEM
EXTERNAL LONGERON 2

SCALE 1:1 — PROJECTION — ISO 2768-m — 3.2

DASH NUMBER: 12-RICSYS-50.000 — NEXT ASSY — APPLICATION

SIZE A2 — CAGE CODE — DRAWING NUMBER 12-RICSYS-50.006 — REV A — SHEET 1 OF 1

THIS IS A CAD DRAWING NO MANUAL ALTERATION

ALL RIGHTS RESERVED - COPYRIGHT ACC. TO DIN 34