All information contained in this document are property of CARLO GAVAZZI SPACE.
All rights reserved.

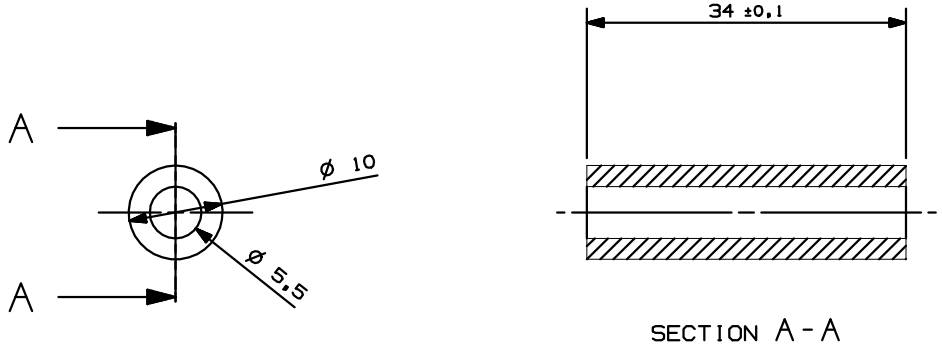

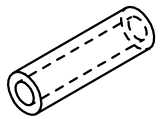

3D VIEW

NOTES:
-MATERIAL KETRON-PEEK-1000
-REMOVE BURRS AND BREAK SHARP EDGES ACC. TO DIN 6784

REV	DATE	DRAWN	CHECK	ENG.	PR. ASS.	C. of C.	CHANGE AUTHORITY
/	25-06-2004	MORATTO					

CUSTOMER ID

EFFECTIVITY

CARLO GAVAZZI SPACE

DRAWING TITLE
AMS - RICH - AEROGEL
SPACER 6

SCALE 2:1

GEN. TOL. DIN 2768 m

GEN. RA. 3,2

CARLO GAVAZZI

HIGHER ASSEMBLY 12-RICSYS-50.000

DRAWING NUMBER 12-RICSYS-50.007

SHEET 1 OF 1