SECTION A-A

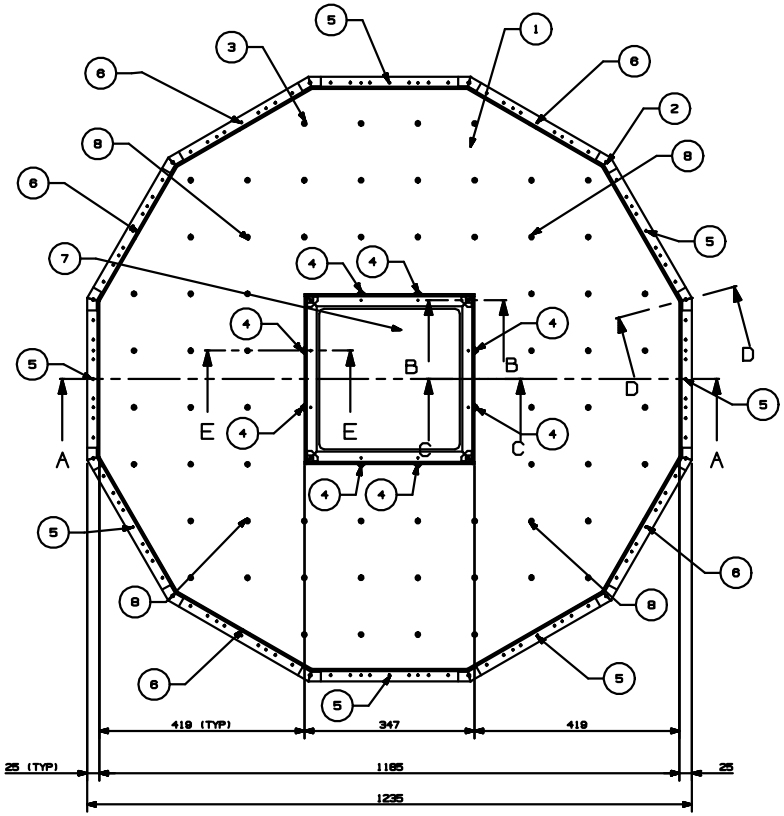

TOP VIEW

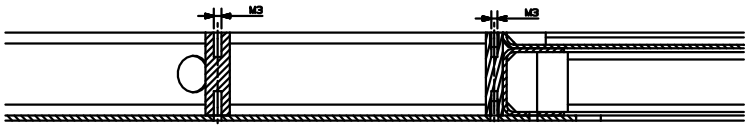

SECTION E-E

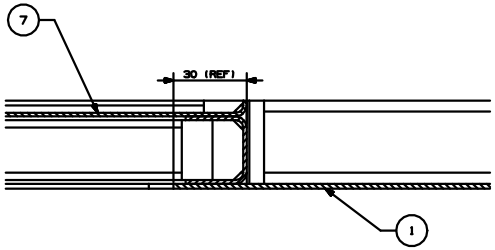

SECTION C-C

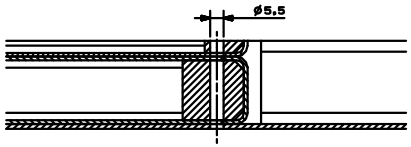

SECTION B-B

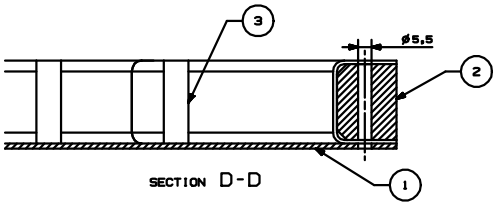

SECTION D-D

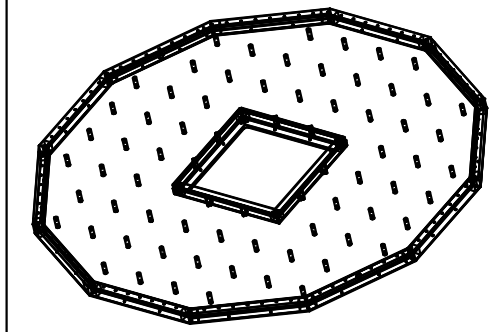

VIEW 3D

NOTES:
-FOR PART LIST SEE 12-RICSYS-50.000 REV /
-GLUE 5, 6 AND 7 TO 1
-GLUE 2 TO 5 OR 6 ACCORDING TO TOP VIEW
-GLUE 8 TO 1
-3 AND 4 SHALL BE FIXED TO 1 BY USING GLUE AND SCREWS
-GLUE PROCEDURE ACCORDING TO GLUE DATA SHEET
-TIGHTENING TORQUE ACCORDING TO GD-WI-CGS-10
-ALL THE EXTERNAL SPACER ARE OF TYPE 2
-THE INTERNAL SPACER WITHOUT REFERENCE ARE OF TYPE 3
-ALL FREE SURFACES OF ITEMS MADE OF CARBON FIBER SHALL BE COVERED WITH AN ALUMINIUM SUBSTRATE WITH A THICKESS OF 50-100 MICRON

REV	DATE	DRAWN	CHECK	ENG.	PR. ADM.	C. of C.	CHANGE AUTHORITY
I	25-08-2004	NORATTO					

DRAWING ID: EFFECTIVITY: CARLO GAVAZZI SPACE

DRAWING TITLE: AMS - RICH - AEROGEL
STRUCTURE ASSY

SCALE 1:5 | MATERIAL: Al 7075 | DWG. No. 32

HIGHER ASSEMBLY: 11-RICSYS-10.000 | DRAWING NUMBER: 12-RICSYS-50.000 | SHEET 1 OF 2

All information contained in this document are property of CARLO GAVAZZI SPACE. All rights reserved.