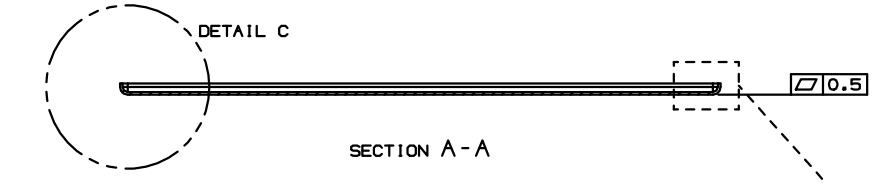

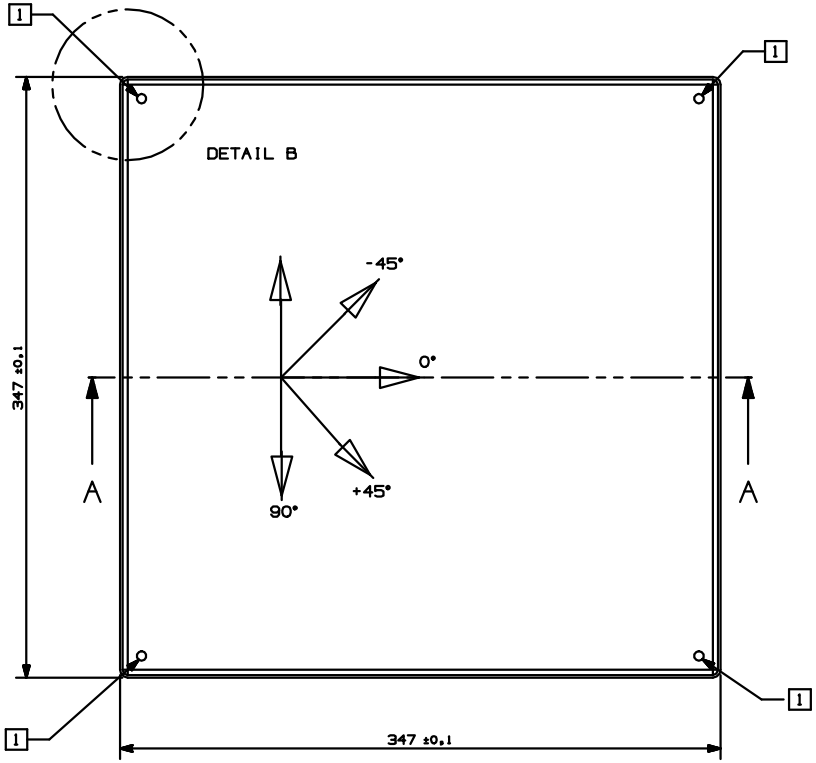

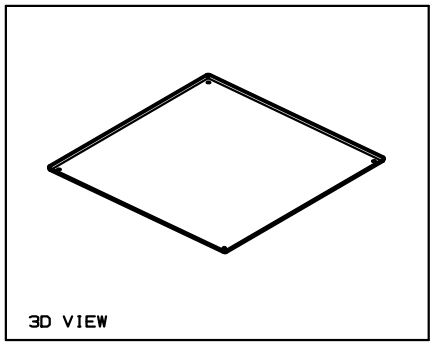

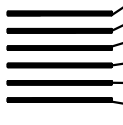

DETAIL A
SCHEMATIC NO SCALE

OPERATION N°	ORIENTATION	PLY N°	ITEM N°
6	-45	6	1
5	+90	5	2
4	+45	4	1
3	+45	3	1
2	+90	2	2
1	-45	1	1

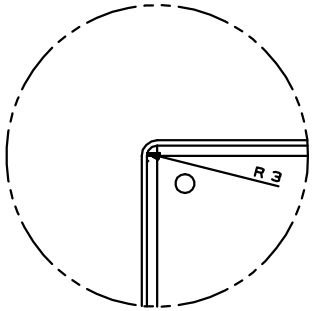

DETAIL B
SCALE 1/1

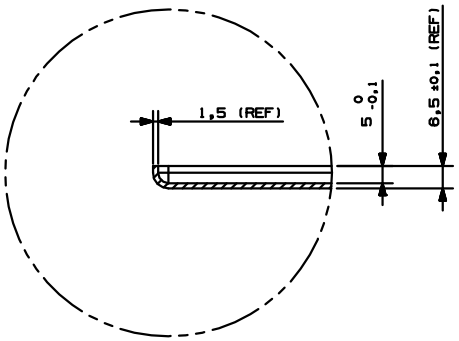

DETAIL C
SCALE 1/1

NOTES:
- MATERIAL CFRP CYCOM 950-1-42%-3KHS-5H
- REMOVE BURRS AND BREAK SHARP EDGES ACC. TO DIN 6784
- [1] DRILL AT ASSY LEVEL
- EXTERNAL SURFACES TO BE COVERED WITH A SHEET OF AL 99% TH 25µm

REV	DATE	DRAWN	CHECK	ENG.	PR. ASS.	C. of C.	CHANGE AUTHORITY
I	25-06-2004	MORATTO					

CUSTOMER ID | EFFECTIVITY | CARLO GAVAZZI SPACE

DRAWING TITLE
AMS - RICH - AEROGEL
NAF CONTAINER

SCALE 1 : 2 | GEN. TOL. DIN 2768 m | GEN. RA. 3,2 | CARLO GAVAZZI

HIGHER ASSEMBLY 12-RICSYS-51.000 | DRAWING NUMBER 12-RICSYS-51.004 | SHEET 1 OF 1

All information contained in this document are property of CARLO GAVAZZI SPACE.
All rights reserved