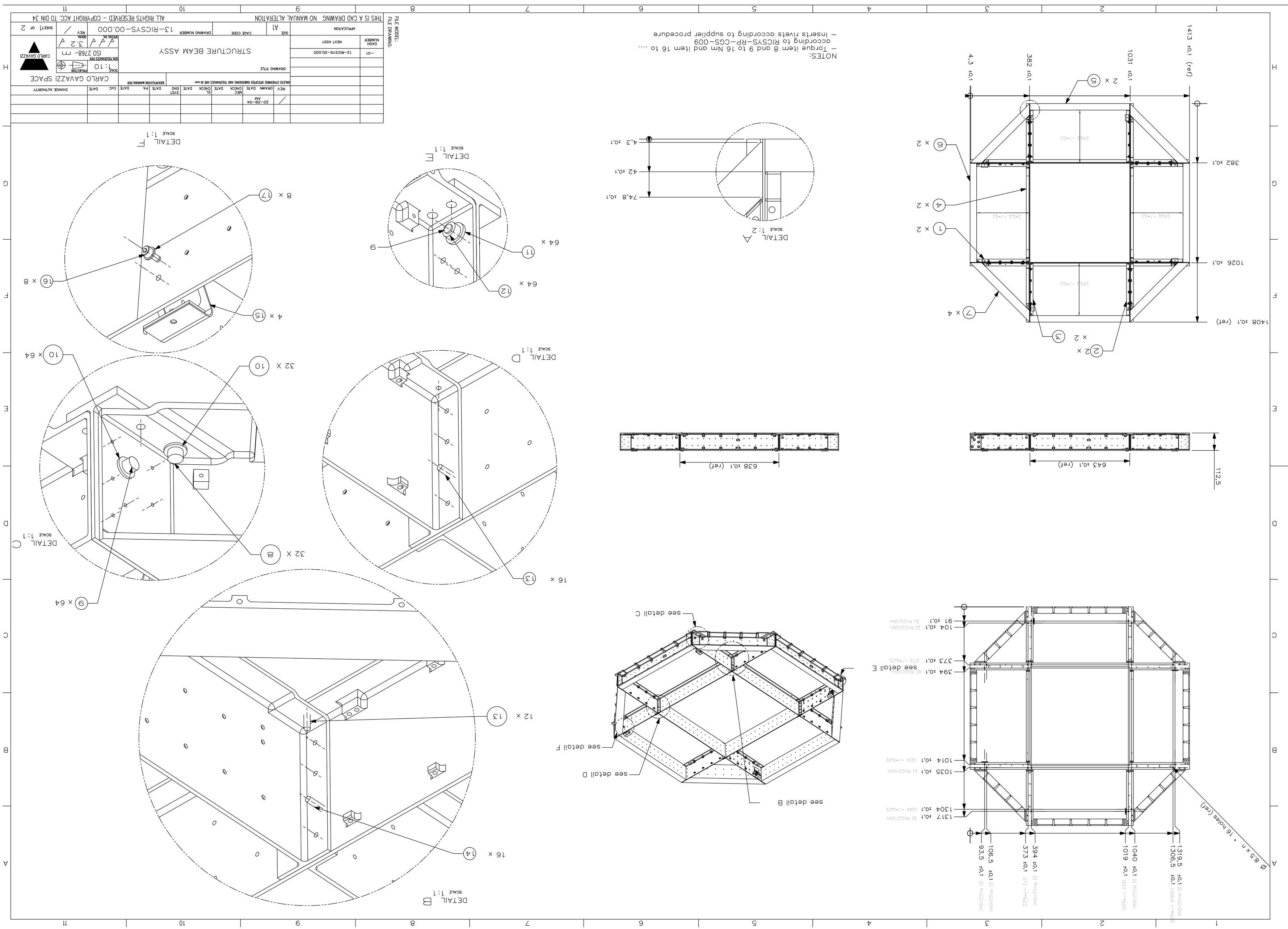

NOTES:
- Torque item 8 and 9 to 16 Nm and item 16 to .... according to RICSYS-RP-CGS-009
- Inserts rivets according to supplier procedure

REV	DRAWN	DATE	NEC CHECK	DATE	EL CHECK	DATE	SYST ENG	DATE	PA	DATE	CoC	DATE	CHANGE AUTHORITY
/	20-09-04 AM												

UNLESS OTHERWISE SPECIFIED DIMENSIONS AND TOLERANCES ARE IN mm

DEVIATION MARKING PER

CARLO GAVAZZI SPACE

DRAWING TITLE: STRUCTURE BEAM ASSY

SCALE 1:10 PROJECTION

CDR TOLERANCES PER ISO 2768-mK

DASH NUMBER	NEXT ASSY
-01	12-RICSYS-00.000

SIZE	CAGE CODE	DRAWING NUMBER	REV
A1		13-RICSYS-00.000	/

APPLICATION

SPECIAL BY: A AM / A AM / 3.2 AM

QAVA

CARLO GAVAZZI

FILE MODEL:
FILE DRAWING:

THIS IS A CAD DRAWING NO MANUAL ALTERATION

ALL RIGHTS RESERVED – COPYRIGHT ACC. TO DIN 34

SHEET 1 OF 2

ERROR: syntaxerror
OFFENDING COMMAND: --nostringval--

STACK:

/Title
()
/Subject
(D:20091002152313+02’00’)
/ModDate
()
/Keywords
(PDFCreator Version 0.9.5)
/Creator
(D:20091002152313+02’00’)
/CreationDate
(mgroeller)
/Author
-mark-