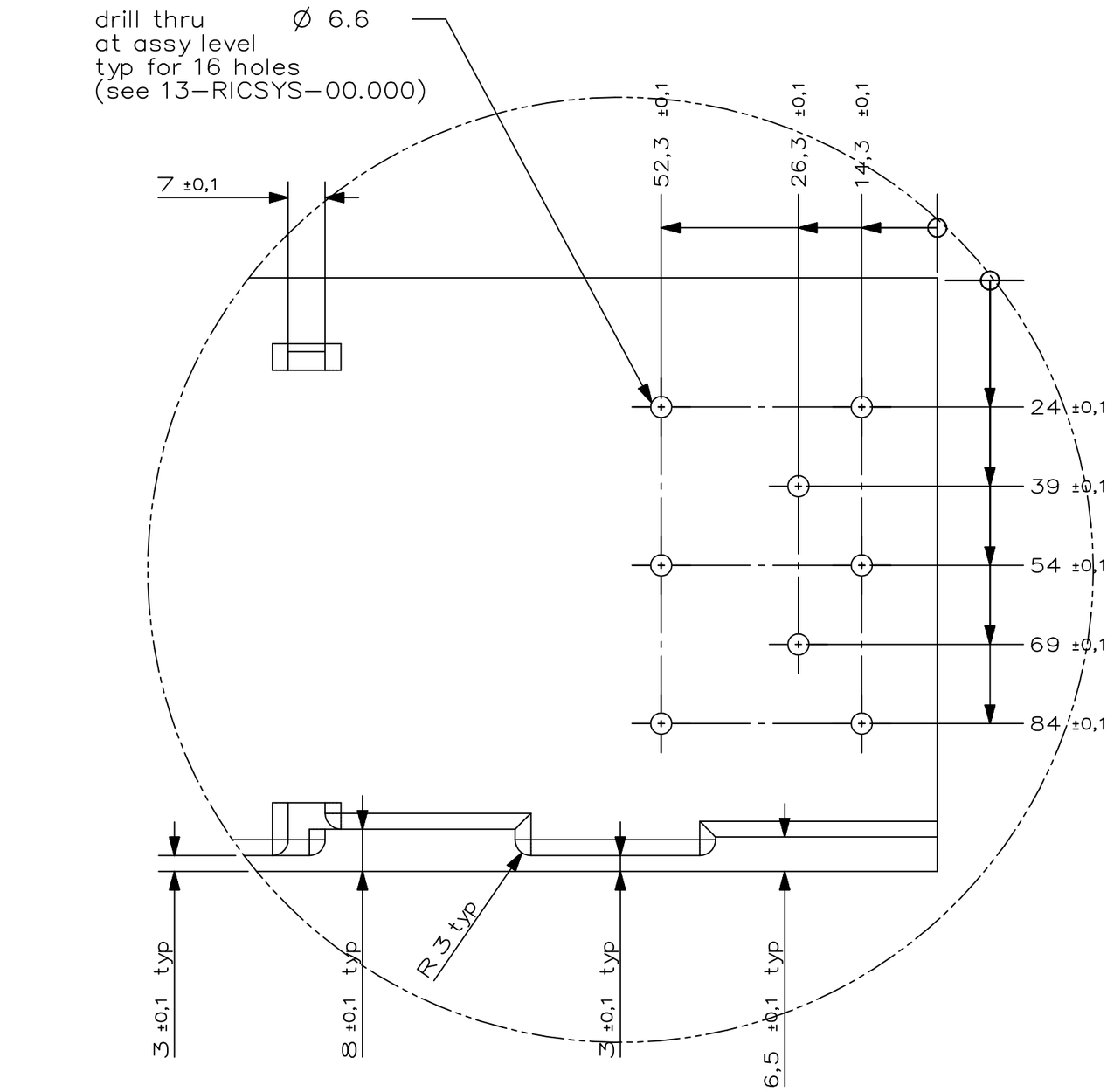

DETAIL C
SCALE 1:1

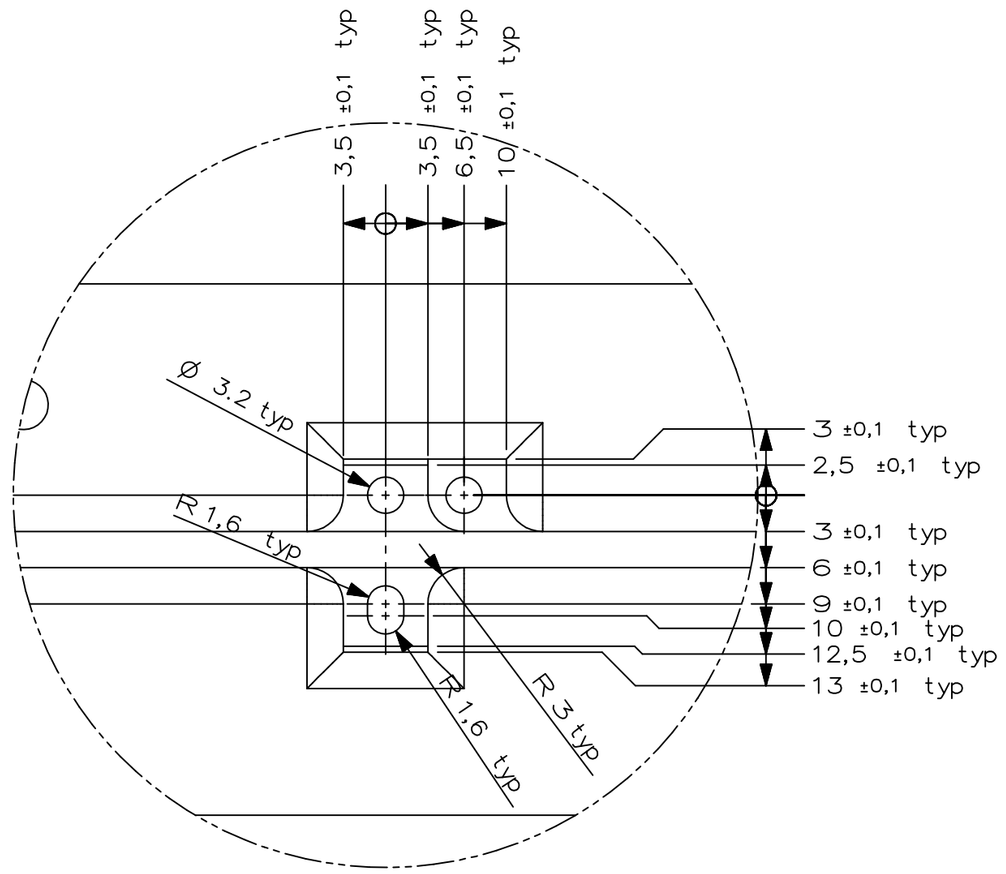

DETAIL D
SCALE 2:1

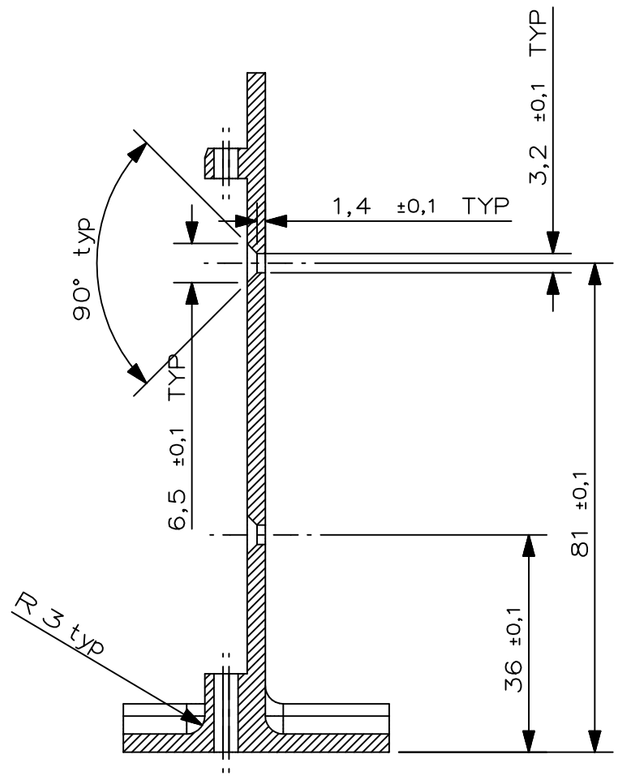

SECTION A—A

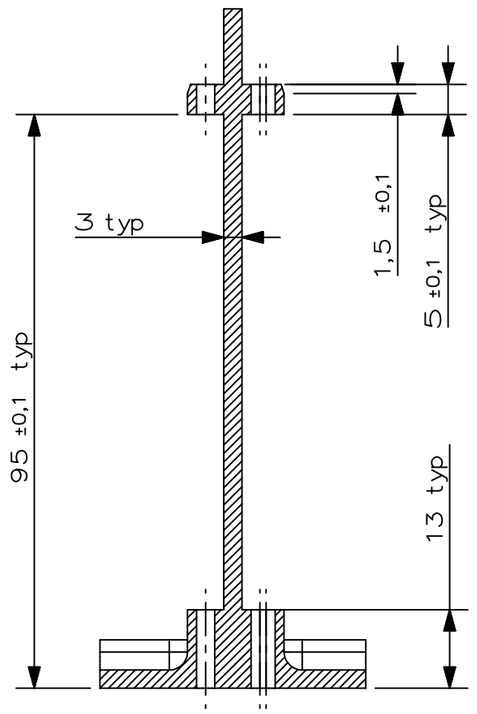

SECTION B—B

FILE MODEL: primary_beam_magn_easy_V2.prt
FILE DRAWING: primary_beam_dwg.prt

REV	DRAWN	DATE	MEC CHECK	DATE	EL CHECK	DATE	SYST ENG	DATE	PA	DATE	CoC	DATE	CHANGE AUTHORITY
/		20-09-2003 AM											

UNLESS OTHERWISE SPECIFIED DIMENSIONS AND TOLERANCES ARE IN mm

IDENTIFICATION MARKING PER

CARLO GAVAZZI SPACE

DRAWING TITLE
RICH SYSTEM
PRIMARY BEAM

SCALE 1:1
PROJECTION
GEN. TOLERANCES PER ISO 2768- m
SPECIAL RA √ √ √
GEN. RA 3.2 √

CARLO GAVAZZI

DASH NUMBER	NEXT ASSY
-01	13-RICSYS-00.000

APPLICATION	SIZE	CAGE CODE	DRAWING NUMBER	REV	SHEET
	A2		13-RICSYS-00.001	/	2 OF 2

THIS IS A CAD DRAWING NO MANUAL ALTERATION

ALL RIGHTS RESERVED - COPYRIGHT ACC. TO DIN 34

ERROR: syntaxerror
OFFENDING COMMAND: --nostringval--

STACK:

/Title
()
/Subject
(D:20091002152937+02’00’)
/ModDate
()
/Keywords
(PDFCreator Version 0.9.5)
/Creator
(D:20091002152937+02’00’)
/CreationDate
(mgroeller)
/Author
-mark-