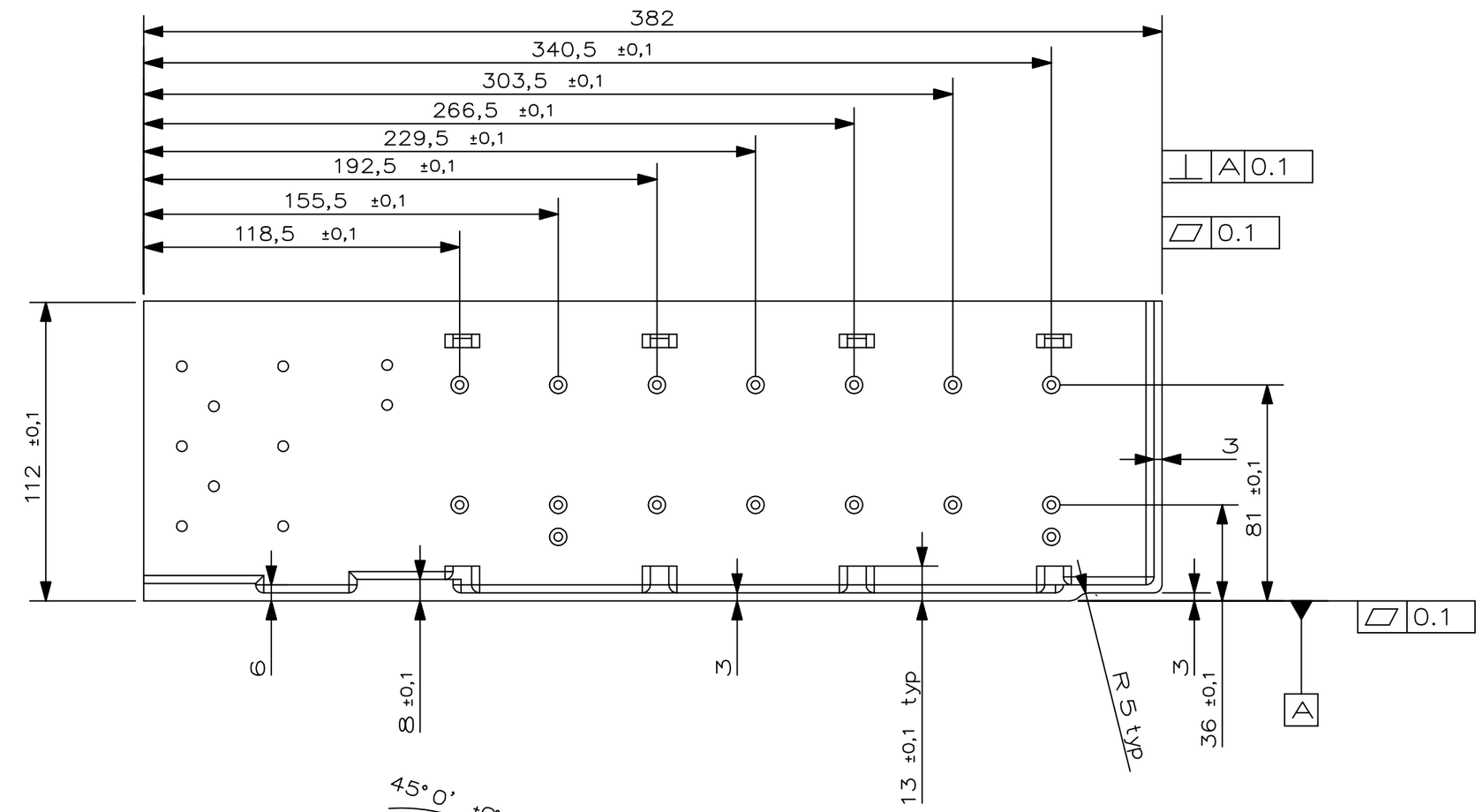

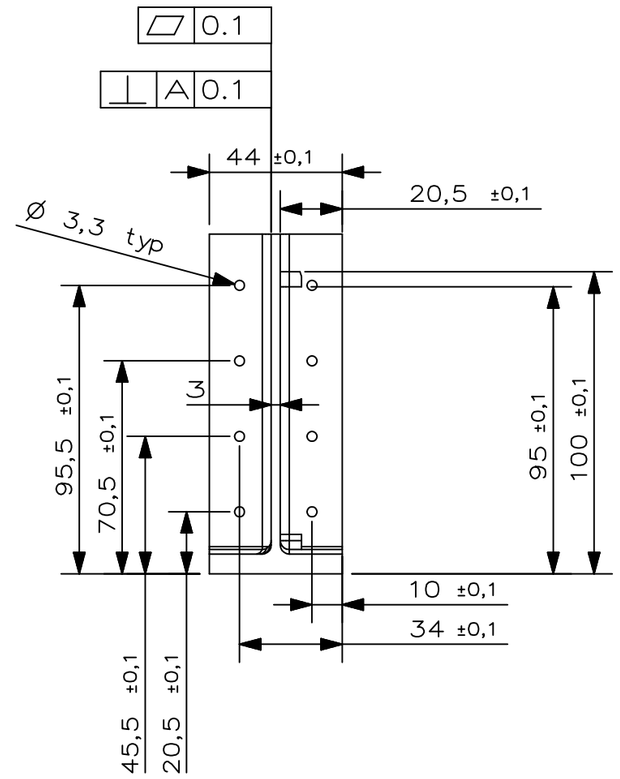

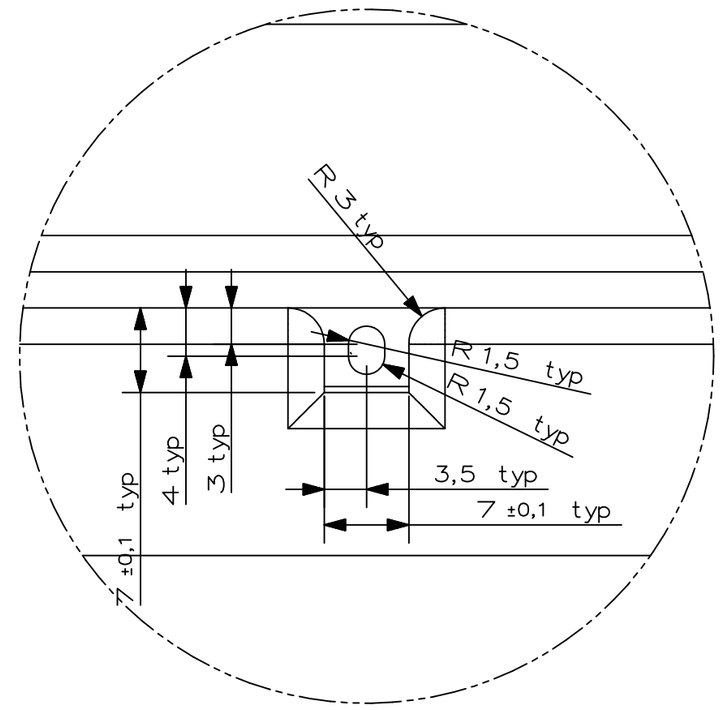

DETAIL A
SCALE 2/1

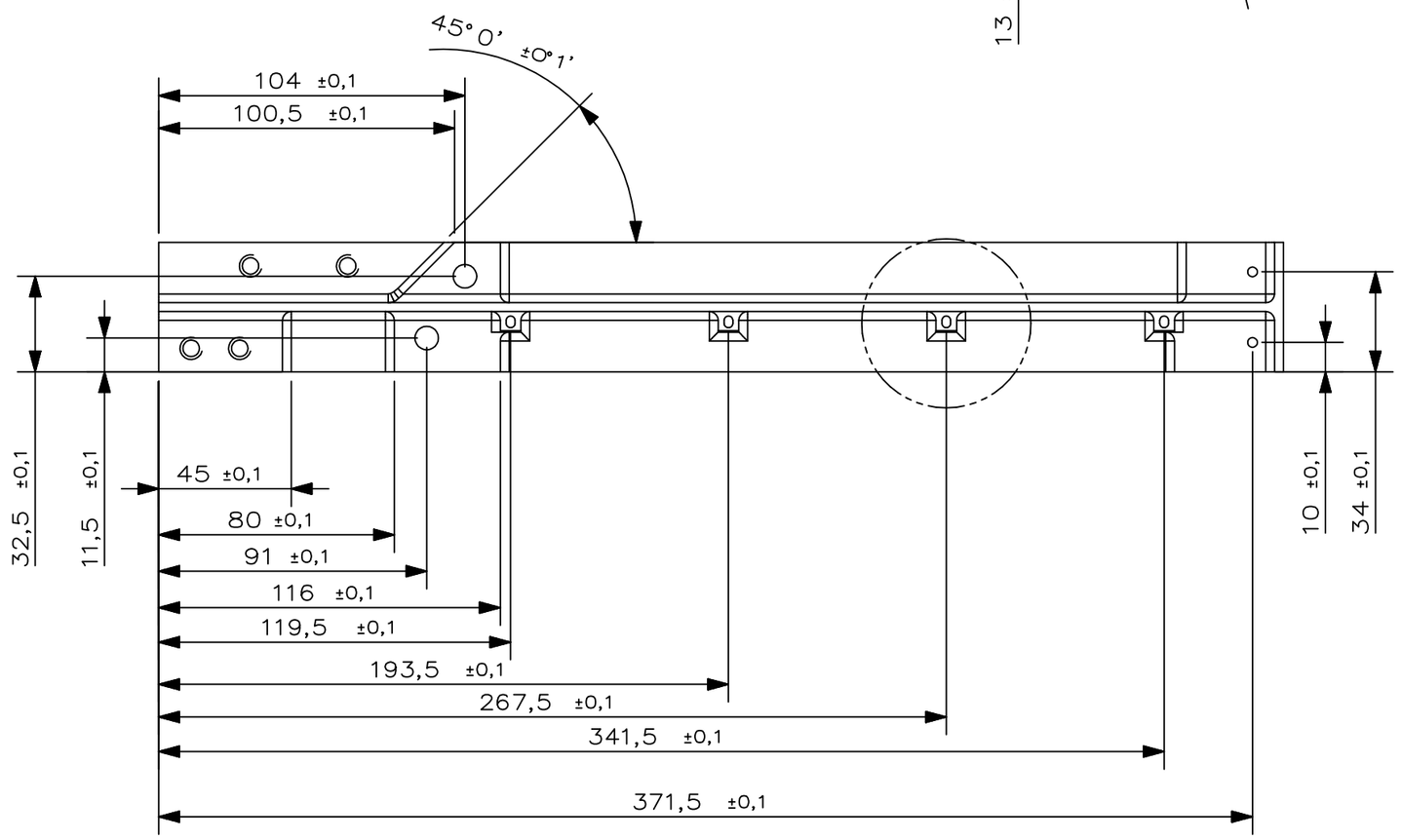

NOTES: UNLESS OTHERWISE SPECIFIED

1. MATERIAL: ALUMINIUM ALLOY 6061 T6
   MATERIAL MUST BE PURCHASED WITH
   CERTIFICATE OF CONFORMANCE.
   COMPLETE PART TO CONFORM TO ULTRASONIC
   INSPECTION PER MIL-STD-2154, TYPE 1, CLASS A.
   FOLLOWED BY NDI PER ASTM-E 1417, TYPE II, METHOD A
   SHALL BE PERFORMED AND REPORTED.
2. SURFACE TREATMENT: ALODINE PER MIL-C-5541, CLASS 3,
   TYPE 2. 1200 GOLD.
3. REMOVE BURRS AND BREAK SHARP EDGES WITH CHAMFER OF
   0,25 X 45, ACCORDING TO DIN 6784.

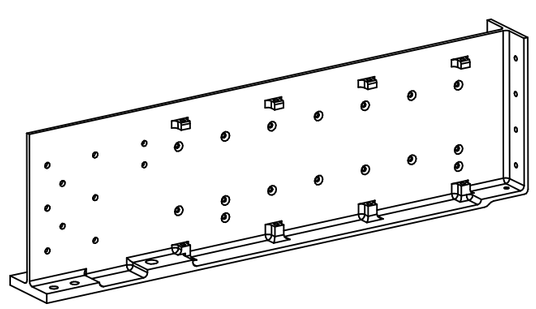

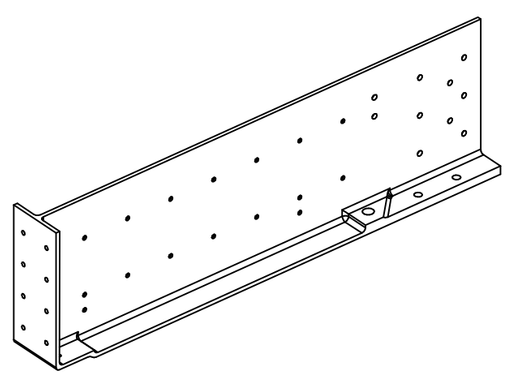

FILE MODEL: secondary_beam1_V4.prt
FILE DRAWING: secondary_beam_1_dwg.prt

		/	09-10-2003						
		REV	DRAWN DATE	MEC CHECK DATE	EL CHECK DATE	SYST ENG DATE	PA DATE	CoC DATE	CHANGE AUTHORITY

UNLESS OTHERWISE SPECIFIED DIMENSIONS AND TOLERANCES ARE IN mm

IDENTIFICATION MARKING PER

CARLO GAVAZZI SPACE

DRAWING TITLE

AMS-02 RICH FM

SECONDARY BEAM 1

SCALE 1:2

PROJECTION

GEN.TOLERANCES PER ISO 2768- m

SPECIAL RA

GEN.RA 3.2

CARLO GAVAZZI

DASH NUMBER	STRUCTURE BEAMS ASSY
	NEXT ASSY

APPLICATION	SIZE	CAGE CODE	DRAWING NUMBER	REV	SHEET
	A2		13-RICSYS-00.002		1 OF 1

THIS IS A CAD DRAWING NO MANUAL ALTERATION

ALL RIGHTS RESERVED - COPYRIGHT ACC. TO DIN 34

ERROR: syntaxerror
OFFENDING COMMAND: --nostringval--

STACK:

/Title
()
/Subject
(D:20091002153122+02’00’)
/ModDate
()
/Keywords
(PDFCreator Version 0.9.5)
/Creator
(D:20091002153122+02’00’)
/CreationDate
(mgroeller)
/Author
-mark-