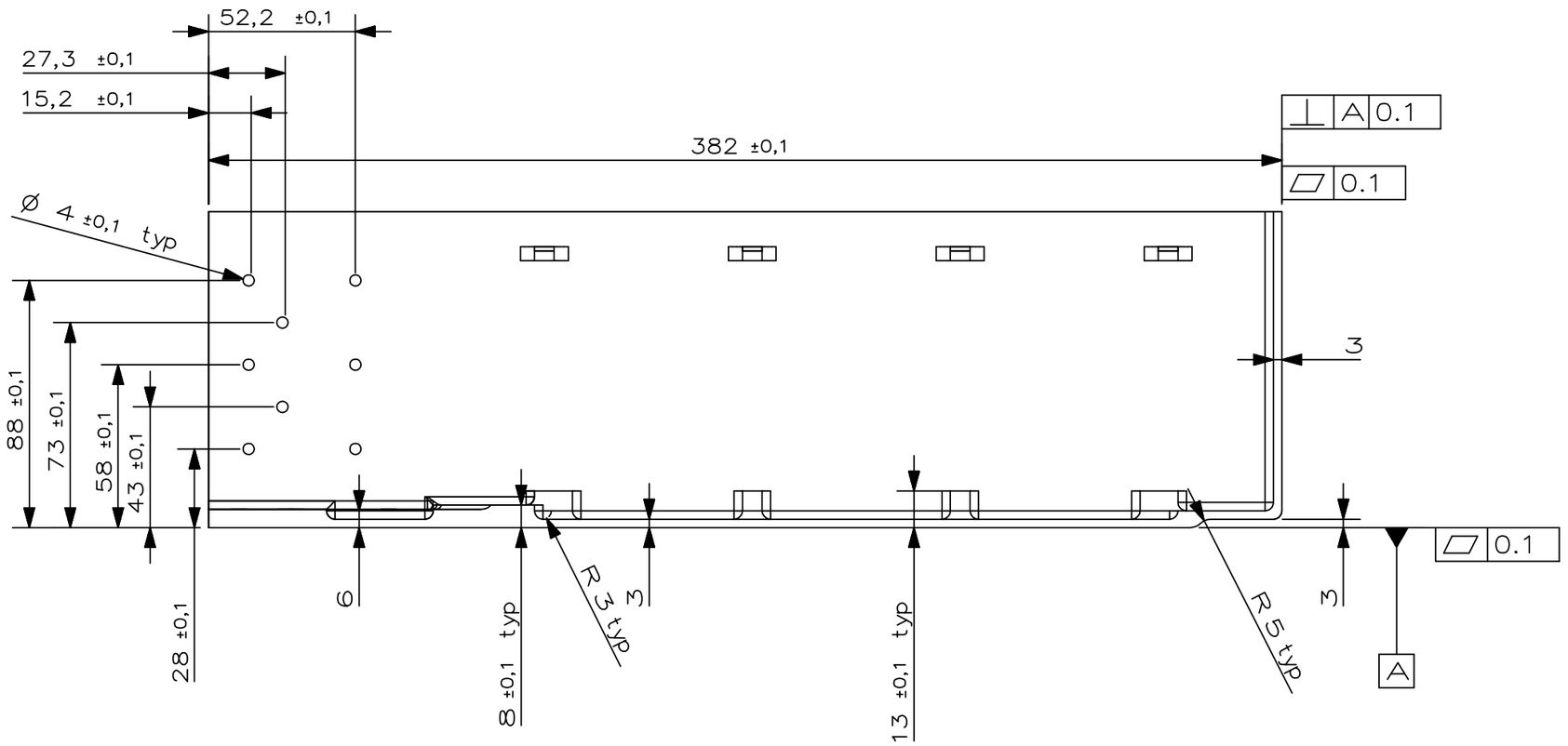

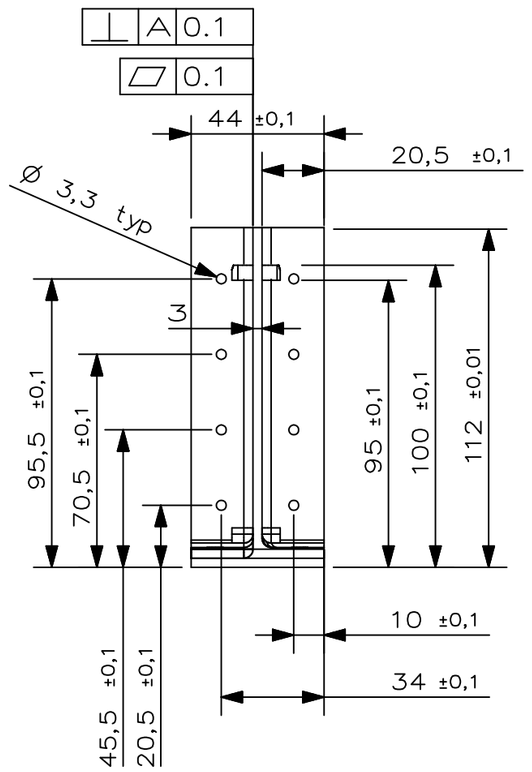

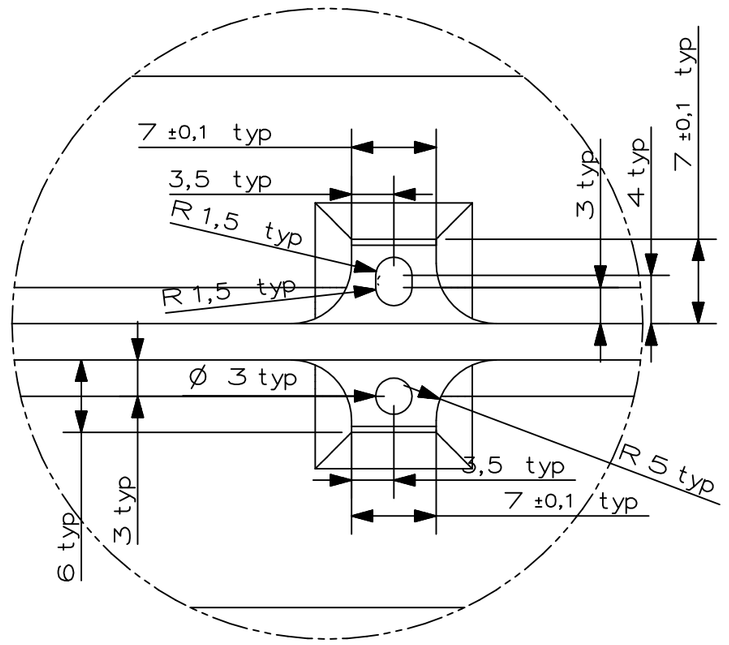

DETAIL A
SCALE 2:1

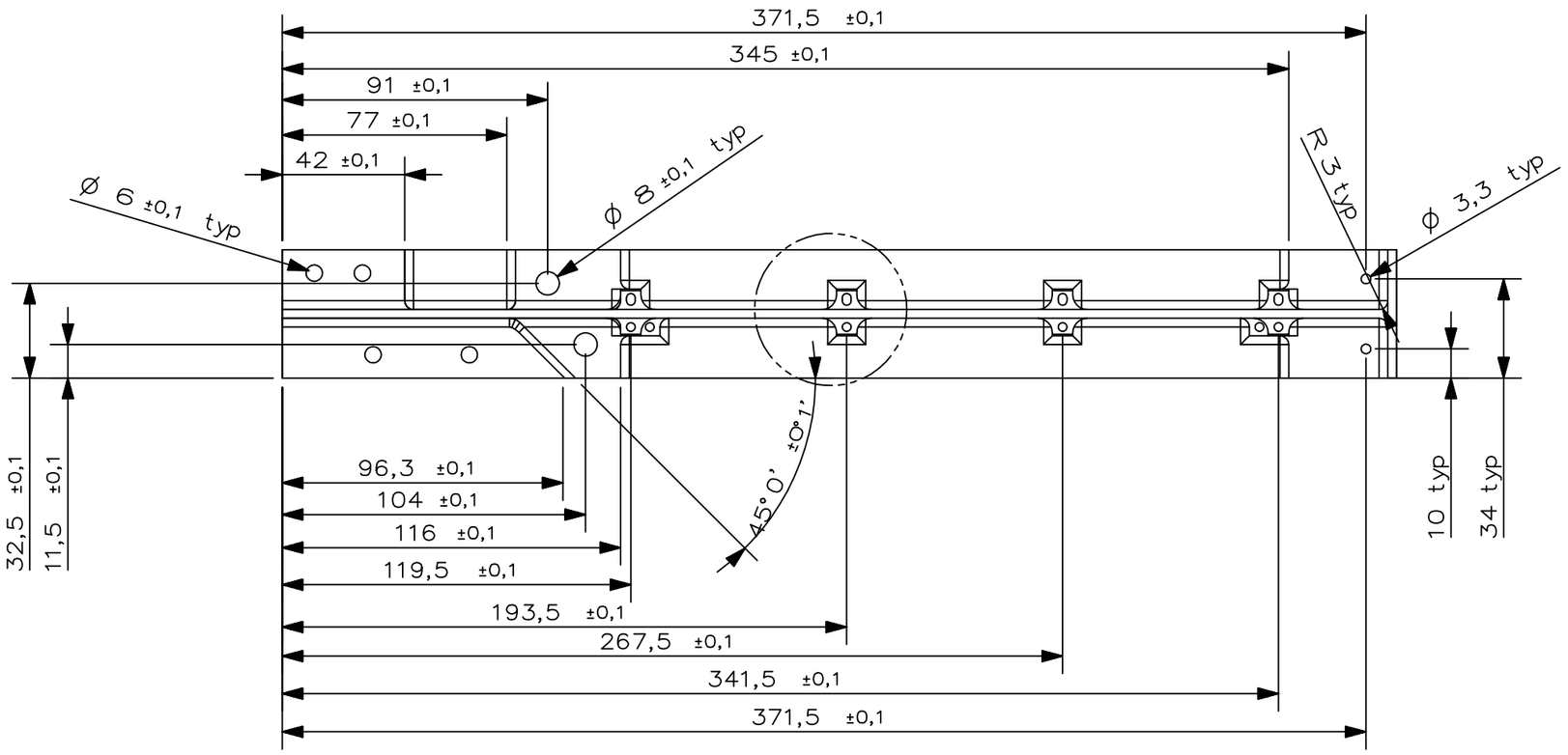

NOTES: UNLESS OTHERWISE SPECIFIED

1. MATERIAL: ALUMINIUM ALLOY 6061 T6
   MATERIAL MUST BE PURCHASED WITH
   CERTIFICATE OF CONFORMANCE.
   COMPLETE PART TO CONFORM TO ULTRASONIC
   INSPECTION PER MIL-STD-2154, TYPE 1, CLASS A.
   FOLLOWED BY NDI PER ASTM-E 1417, TYPE II, METHOD A
   SHALL BE PERFORMED AND REPORTED.
2. SURFACE TREATMENT: ALODINE PER MIL-C-5541, CLASS 3,
   TYPE 2. 1200 GOLD.
3. REMOVE BURRS AND BREAK SHARP EDGES WITH CHAMFER OF
   0,25 X 45, ACCORDING TO DIN 6784.

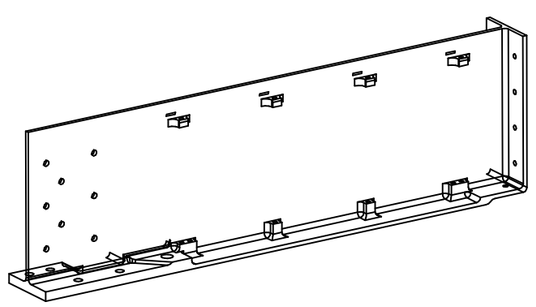

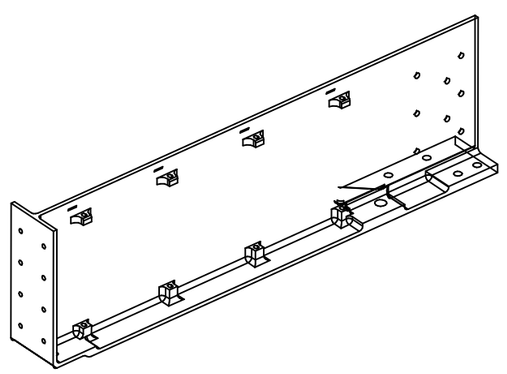

FILE MODEL: secondary_beam2_V2.prt
FILE DRAWING: secondary_beam_2_dwg.prt

REV	DRAWN	DATE	MEC CHECK	DATE	EL CHECK	DATE	SYST ENG	DATE	PA	DATE	CoC	DATE	CHANGE AUTHORITY
/		09-10-2003											

UNLESS OTHERWISE SPECIFIED DIMENSIONS AND TOLERANCES ARE IN mm

IDENTIFICATION MARKING PER

CARLO GAVAZZI SPACE

DRAWING TITLE

AMS-02 RICH FM

SECONDARY BEAM 2

SCALE 1:2

PROJECTION

GEN.TOLERANCES PER ISO 2768- m

SPECIAL RA √ √ √

GEN.RA 3.2 √

CARLO GAVAZZI

DASH NUMBER	NEXT ASSY
	STRUCTURE BEAMS ASSY

APPLICATION

SIZE A2

CAGE CODE

DRAWING NUMBER 13-RICSYS-00.003

REV

SHEET 1 OF 1

THIS IS A CAD DRAWING NO MANUAL ALTERATION

ALL RIGHTS RESERVED - COPYRIGHT ACC. TO DIN 34

ERROR: syntaxerror
OFFENDING COMMAND: --nostringval--

STACK:

/Title
()
/Subject
(D:20091002153344+02’00’)
/ModDate
()
/Keywords
(PDFCreator Version 0.9.5)
/Creator
(D:20091002153344+02’00’)
/CreationDate
(mgroeller)
/Author
-mark-