A PART OF THE SHIELDING
WAS REMOVED FOR CLARITY

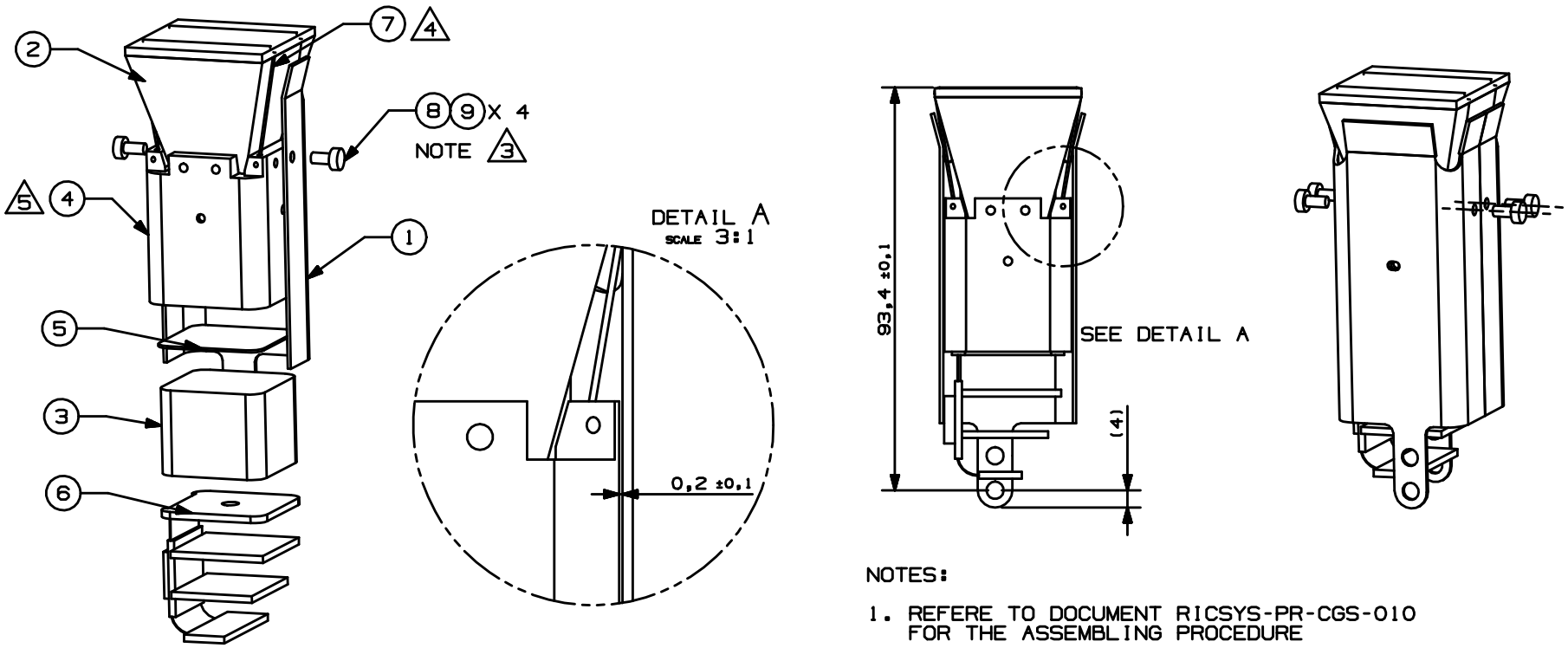

NOTES:

1. REFERE TO DOCUMENT RICSYS-PR-CGS-010 FOR THE ASSEMBLING PROCEDURE
2. TORQUE ITEM 8 AT 0.6 Nm
3. GLUE ITEM 8 TO ITEM 1 WITH ITEM 9
4. GLUE ITEM 7 TO ITEM 4 WITH ITEM 10
5. GLUE ITEM 4 TO ITEM 1 WITH ITEM 11

REV	DRAWN	DATE	MEC CHECK	DATE	EL CHECK	DATE	SYST ENG	DATE	PA	DATE	CoC	DATE	CHANGE AUTHORITY
/	GM	5/07/2004											

UNLESS OTHERWISE SPECIFIED DIMENSIONS AND TOLERANCES ARE IN mm

IDENTIFICATION MARKING PER

CARLO GAVAZZI SPACE

DASH NUMBER	NEXT ASSY
-01	12-RICSYS-10.000
-01	12-RICSYS-20.000

APPLICATION

DRAWING TITLE

RICH SYSTEM
PMT ASSY 0.8

SCALE 1:1

PROJECTION

GEN. TOLERANCES PER ISO 2768-m

SPECIAL RA. 3.2 GEN. RA.

CARLO GAVAZZI

SIZE A3

CAGE CODE

DRAWING NUMBER 13-RICSYS-10.000

REV /

SHEET 1 OF 2

FILE MODEL:PMT_ASSY_0.8
FILE DRAWING:PMT_ASSY_0.8_dwg

THIS IS A CAD DRAWING NO MANUAL ALTERATION

ALL RIGHTS RESERVED - COPYRIGHT ACC. TO DIN 34