PART OF THE SHIELDING
WAS REMOVED FOR CLARITY

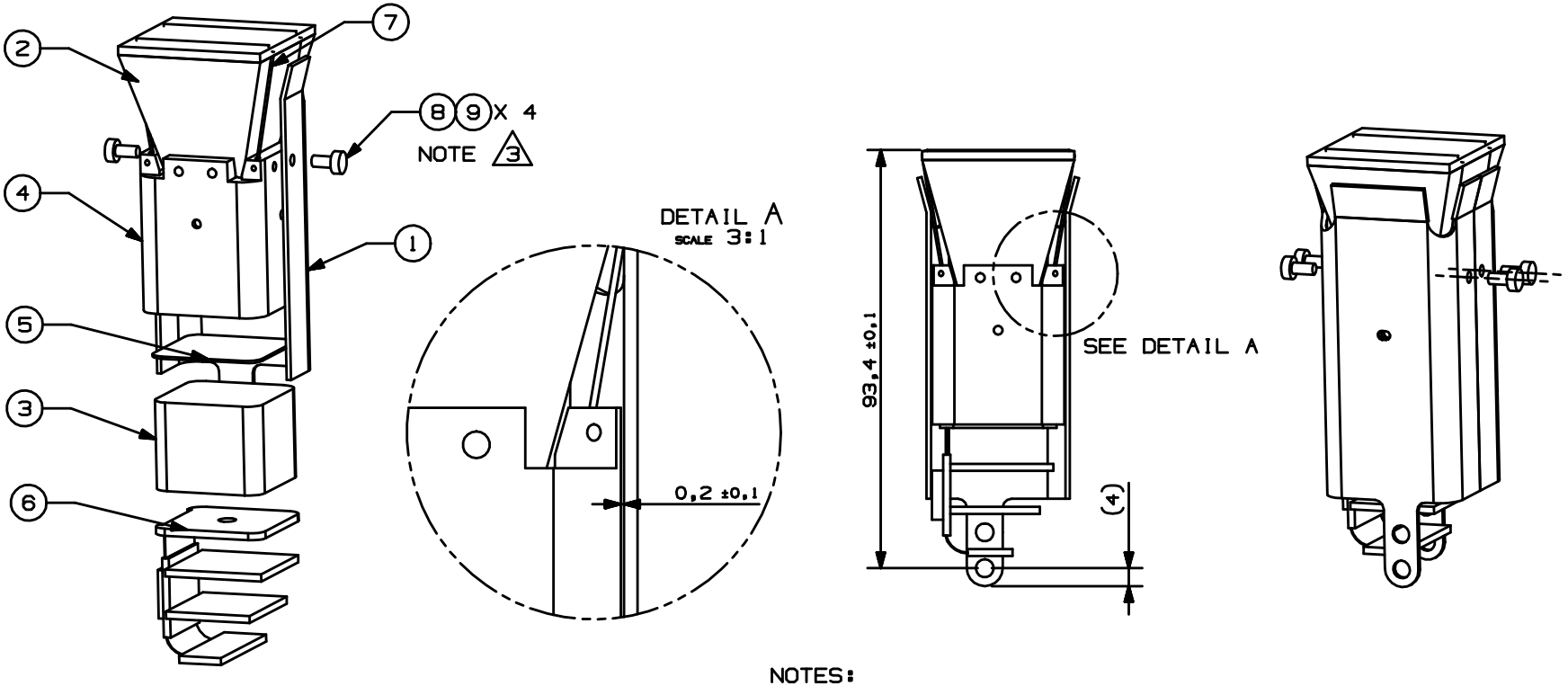

NOTES:

1. REFERE TO DOCUMENT RICSYS-PR-CGS-010 FOR THE ASSEMBLING PROCEDURE
2. TORQUE ITEM 8 AT 0.6 Nm
3. GLUE ITEM 8 TO ITEM 1 WITH ITEM 9

REV	DRAWN	DATE	MEC CHECK	DATE	EL CHECK	DATE	SYST ENG	DATE	PA	DATE	CoC	DATE	CHANGE AUTHORITY
/	GM	6/07/2004											

UNLESS OTHERWISE SPECIFIED DIMENSIONS AND TOLERANCES ARE IN mm

IDENTIFICATION MARKING PER

CARLO GAVAZZI SPACE

DRAWING TITLE
RICH SYSTEM
PMT ASSY 1.0

SCALE 1:1 | PROJECTION | GEN. TOLERANCES PER ISO 2768-m | SPECIAL RA. | GEN. RA. 3.2

CARLO GAVAZZI

DASH NUMBER	NEXT ASSY
-01	12-RICSYS-30.000

APPLICATION

SIZE A3 | CAGE CODE | DRAWING NUMBER 13-RICSYS-20.000 | REV / | SHEET 1 OF 2

FILE MODEL: PMT_assy_1.0
FILE DRAWING: PMT_assy_1.0_dwg

THIS IS A CAD DRAWING NO MANUAL ALTERATION

ALL RIGHTS RESERVED - COPYRIGHT ACC. TO DIN 34