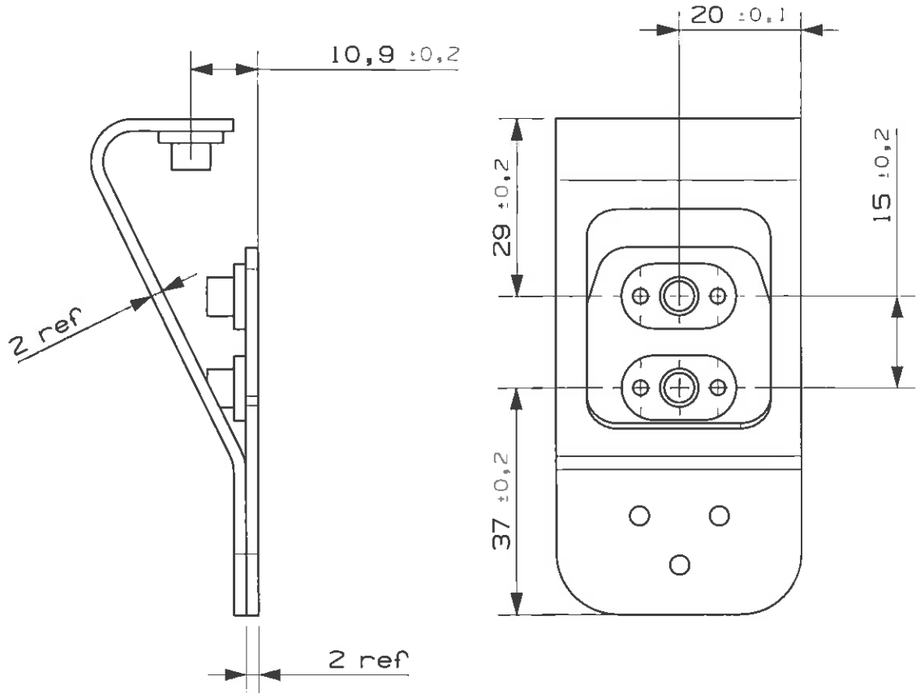

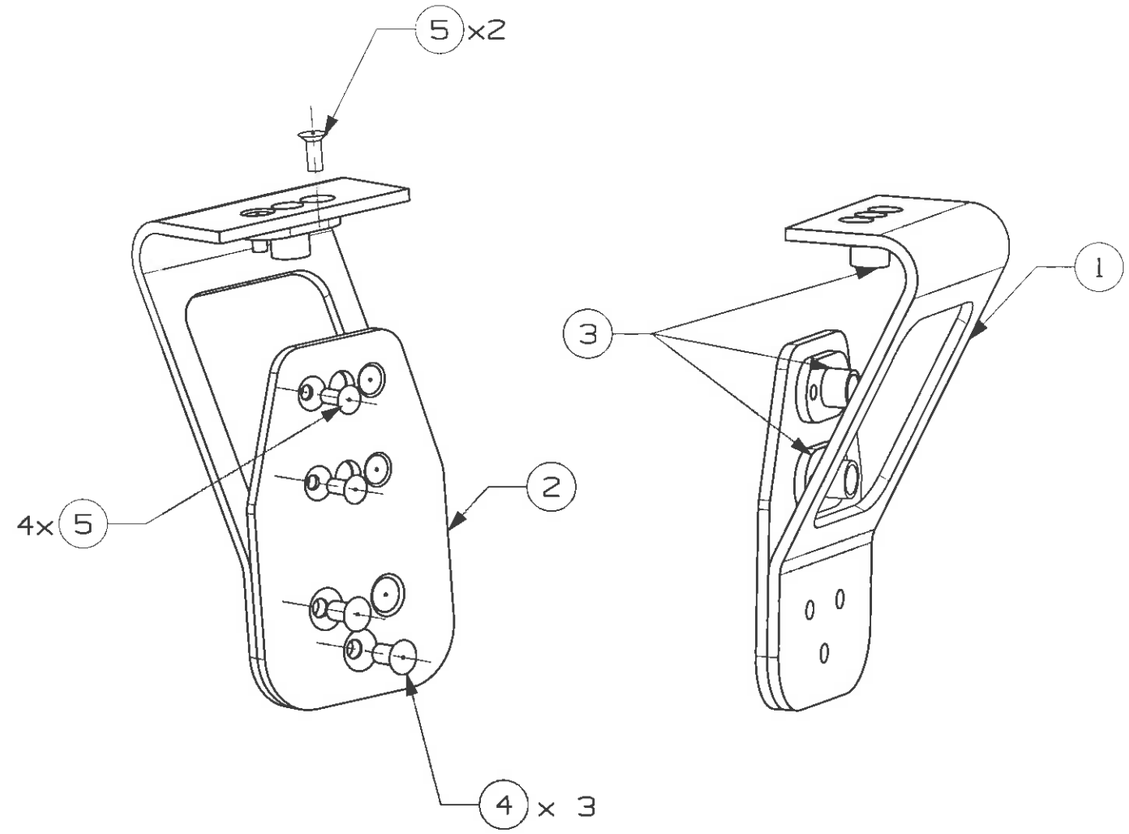

NOTES:

1. ASSEMBLY ITEM 4 AND 5 ACCORDING TO SUPPLIER DATA SHEET

REV	DRAWN	DATE	MEC CHECK	DATE	EL CHECK	DATE	SYST ENG	DATE	PA	DATE	CoC	DATE	CHANGE AUTHORITY
/	GM	24/01/2005		14/2/05				14/2/05		16.02.05		16/2/05	

UNLESS OTHERWISE SPECIFIED DIMENSIONS AND TOLERANCES ARE IN mm

IDENTIFICATION MARKING PER

CARLO GAVAZZI SPACE

DRAWING TITLE

RICH FM

C FOOT ASSY

SCALE 1 : 1

PROJECTION

GEN. TOLERANCES PER ISO 2768- m

SPECIAL RA. √ √ √

GEN. RA. 3.2 √

CARLO GAVAZZI

DASH NUMBER	NEXT ASSY
	13-RICSYS-00.000

APPLICATION	SIZE	CAGE CODE	DRAWING NUMBER	REV	SHEET
	A3		14-RICSYS-00.000	/	1 OF 2

FILE MODEL: C_foot_assy_V4.prt

FILE DRAWING: C_foot_assy_V4_dwg.prt

THIS IS A CAD DRAWING NO MANUAL ALTERATION

ALL RIGHTS RESERVED - COPYRIGHT ACC. TO DIN 34