ORIGINALE ARCHIVIO

CARLO GAVAZZI

CARLO GAVAZZI SPACE SpA

RICH SYSTEM

Tipo Doc.: *Doc.Type:*	PROCEDURE			N° DRD: *DRD N°:*	NA
N° Doc.: *Doc. N°:*	**RICSYS-PR-CGS-007**	Ediz.: *Issue:* **2**	Data: *Date:* **18/11/2003**	Pagina *Page* **1**	Di *Of* **31**
Titolo : *Title :*	RICH FM VIBRATION TEST PROCEDURE				

	Nome & Funzione *Name & Function*	Firma *Signature*	Data *Date*
Preparato da: *Prepared by:*	Zambra R (DT/MT/)		18/11/03
Approvato da: *Approved by:*	Cinquepalmi C. (PC/CC/) Legramandi S. (PA/SF) Molina M. (DT/MT/) Olivier M (DT/MT/)		18/11/03 18/11/03 18/11/03 18/11/03
Applicazione autorizzata da: *Application authorized by:*	Sardo G. (DT/MT/)		18/11/03

Customer / Higher Level Contractor

Accettato da: *Accepted by:*			
Approvato da: *Approved by:*			

LISTA DI DISTRIBUZIONE *DISTRIBUTION LIST*	N	A	I
Interna / *Internal*			
Esterna / *External*			
ASI	1		x

N=Numero di copie A=Applicazione I=Informazione
N=Number of copy A=Application I=Information

Gestione documenti: *Data Management:* 18/11/03
Firma / *Signature* Data / *Date*

File: RICSYS-PR-CGS-007_issue_2 doc

Questo documento contiene informazioni di proprietà di CARLO GAVAZZI SPACE SpA: Tutti i diritti sono riservati
All information contained in this document are property of CARLO GAVAZZI SPACE SpA. All right reserved.

REGISTRAZIONE DELLE MODIFICHE / *CHANGE RECORD*			
EDIZIONE *ISSUE*	DATA *DATE*	AUTORIZZAZIONE *CHANGE AUTHORITY*	OGGETTO DELLA MODIFICA E SEZIONI AFFETTE *REASON FOR CHANGE AND AFFECTED SECTIONS*
1	01/10/2003		First emission
2	18/11/2003		Updated "success criteria" chapter (pag 12) and "step by step" table (pag 23)

Questo documento contiene informazioni di proprietà di CARLO GAVAZZI SPACE SpA Tutti i diritti sono riservati.
All information contained in this document are property of CARLO GAVAZZI SPACE SpA. All right reserved.

LISTA DELLE PAGINE VALIDE / *LIST OF VALID PAGES*

PAGINA *PAGE*	EDIZIONE *ISSUE*	PAGINA *PAGE*	EDIZIONE *ISSUE*	PAGINA *PAGE*	EDIZIONE *ISSUE*	PAGINA *PAGE*	EDIZIONE *ISSUE*	PAGINA *PAGE*	EDIZIONE *ISSUE*
1 - 31	2								

Questo documento contiene informazioni di proprietà di CARLO GAVAZZI SPACE SpA Tutti i diritti sono riservati
All information contained in this document are property of CARLO GAVAZZI SPACE SpA. All right reserved.

TABLE OF CONTENT

LIST OF TABLES 5
LIST OF FIGURES 5

1. SCOPE 6

2. DOCUMENTS 6

2.1 APPLICABLE DOCUMENTS 6
2.2 REFERENCE DOCUMENTS 6

3. ACRONYMS 6

4. TESTED ITEMS 7

5. TEST OBJECTIVE 8

6. FACILITY DESCRIPTION 8

6.1 TEST SETUP 8
6.2 SHAKER CHARACTERISTICS 9
6.3 SLIDING TABLE CHARACTERISTICS 9
6.4 FIXTURE CHARACTERISTICS 9
6.5 ACCELEROMETER CHARACTERISTICS 11

7. TEST CONDITIONS 11

8. TEST RESPONSIBILITY 11

9. SUCCESS CRITERIA 12

9.1 MECHANICAL CRITERIA 12
9.2 FUNCTIONAL CRITERIA 12

10. OPERATIONAL RESTRICTIONS 12

11. PARTICIPANTS REQUIRED 13

11.1 GENERAL 13
11.2 QA WITNESS OF TESTS AND SIGN-OFF 13

12. NON-CONFORMANCE AND FAILURES 13

13. CALIBRATION REQUIREMENTS 13

14. MEASUREMENT ACCURACY 14

15. TEST PROCEDURE VARIATION SHEET 14

16. GENERAL PROCEDURE 16

16.1 TEST LEVELS 16
16.1.1 RANDOM TEST LEVEL 16
16.1.2 TEST LEVEL FOR RESONANCE SEARCH 18

17. UUT ACCELEROMETER DISPOSITION: 19

18. RICH FM FLOWCHART: 21

19. VIBRATION TEST PROCEDURE (STEP BY STEP) 22

Questo documento contiene informazioni di proprietà di CARLO GAVAZZI SPACE SpA. Tutti i diritti sono riservati.
All information contained in this document are property of CARLO GAVAZZI SPACE SpA. All right reserved.

LIST OF TABLES

Table 9-1: Mechanical success criteria 12
Table 9-2: Functional success criteria 12
Table 16-1: Maximum Expected Flight Levels for the Alpha Magnetic Spectrometer – 02 **X Axis** 16
Table 16-2: Maximum Expected Flight Levels for the Alpha Magnetic Spectrometer – 02 **Y Axis** 16
Table 16-3: Maximum Expected Flight Levels for the Alpha Magnetic Spectrometer – 02 **Z Axis** 16
Table 17-1: Accelerometers disposition 19

LIST OF FIGURES

Figure 4-1: Model of the UUT 7
Figure 6-1: Shaker in position for the X and Y directions of test 8
Figure 6-2: Shaker in position for the Z direction of test 8
Figure 6-3: Fixture Envelope 9
Figure 6-4: Fixture Pattern 10
Figure 16-1: Test Random Vibration Levels X, Y and Z axes 17
Figure 17-1: Pilot Accelerometers disposition 19
Figure 17-2: Accelerometers disposition 20
Figure 17-3: Accelerometers disposition 20

Questo documento contiene informazioni di proprietà di CARLO GAVAZZI SPACE SpA. Tutti i diritti sono riservati.
All information contained in this document are property of CARLO GAVAZZI SPACE SpA. All right reserved.

1. SCOPE

This document defines the procedure to test the RICH SYSTEM FM for the vibration environment. Qualification of the design shall be accomplished using Flight Model hardware. The objectives of the test shall be to verify all the specified performance of the hardware assembled with flight materials and components under applicable mechanical environment and I/F conditions:

- No structural yielding or failures. (AD 1).
- No functional degradation due to vibration loads (AD 1).

2. DOCUMENTS

2.1 APPLICABLE DOCUMENTS

AD #	Document Number	Issue/Date	Rev.	Title/Applicability
1	JSC-28792	DEC, 2001	B	Alpha Magnetic Spectrometer – 02 Structural Verification Plan for the Space Transportation System and the International Space Station

2.2 REFERENCE DOCUMENTS

RD #	Document Number	Issue/Date	Rev.	Title/Applicability

3. ACRONYMS

A.D.	APPLICABLE DOCUMENTS
FEM	FINITE ELEMENT MODEL
FM	FLIGHT MODEL
I/F	INTERFACE
PMT	PHOTO MULTIPLIER TUBE
MEFL	MAXIMUM EXPECTED FLIGHT LEVEL
QM	QUALIFICATION MODEL
R.D.	REFERENCE DOCUMENTS
UUT	UNIT UNDER TEST

Questo documento contiene informazioni di proprietà di CARLO GAVAZZI SPACE SpA Tutti i diritti sono riservati
All information contained in this document are property of CARLO GAVAZZI SPACE SpA. All right reserved.

4. TESTED ITEMS

Tested item, called UUT is:

MODEL	ITEM	C.I.	Drawing Number/Part Number	S/N	NOTES
FM	RICH-SYS	-	See Figure 4-1		

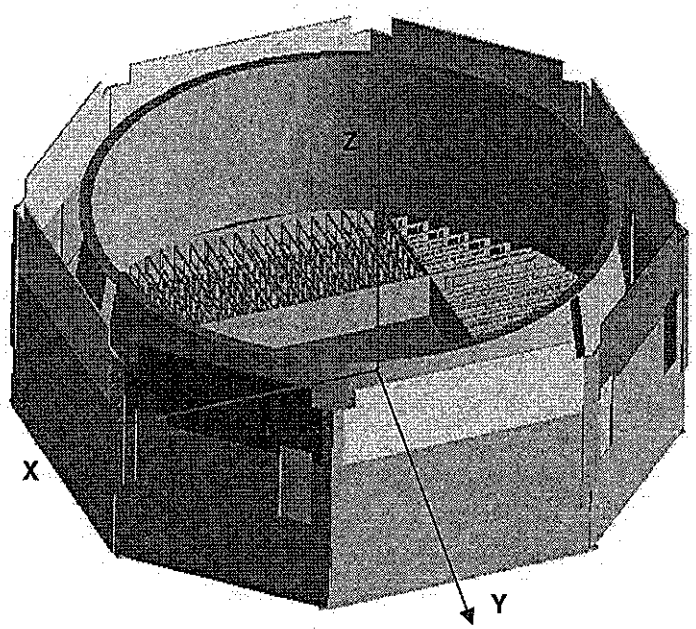

Figure 4-1: Model of the UUT

For the UUT, mass property and envelope are:

Mass: 180Kg
Dimension: 1405mm length, 1410mm width and 619.4mm height

Questo documento contiene informazioni di proprietà di CARLO GAVAZZI SPACE SpA. Tutti i diritti sono riservati
All information contained in this document are property of CARLO GAVAZZI SPACE SpA. All right reserved.

5. TEST OBJECTIVE

This test is required to demonstrate the unit to withstand the MEFL, to verify the absence of material-workmanship defects and to verify the requirements.
The UUT shall be subject to a visual inspection.
Functional check shall be performed before and after test campaign by the collaboration.

6. FACILITY DESCRIPTION

The vibration tests shall be executed at an external laboratory in a proper area.

6.1 TEST SETUP

A sketch of the shaker and sliding table is shown in the following figures

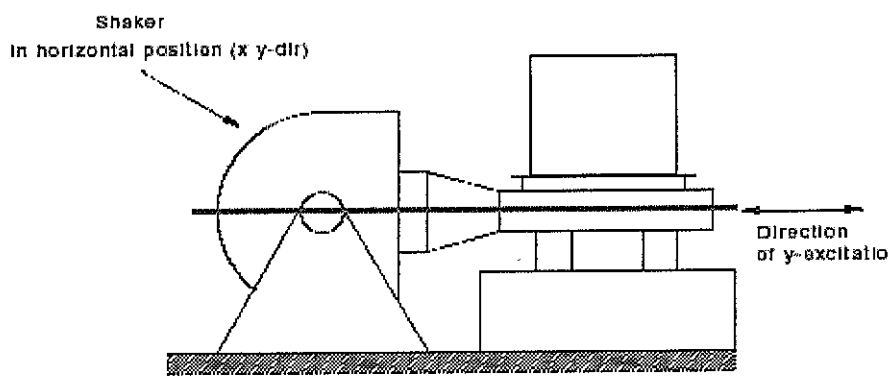

Figure 6-1: Shaker in position for the X and Y directions of test

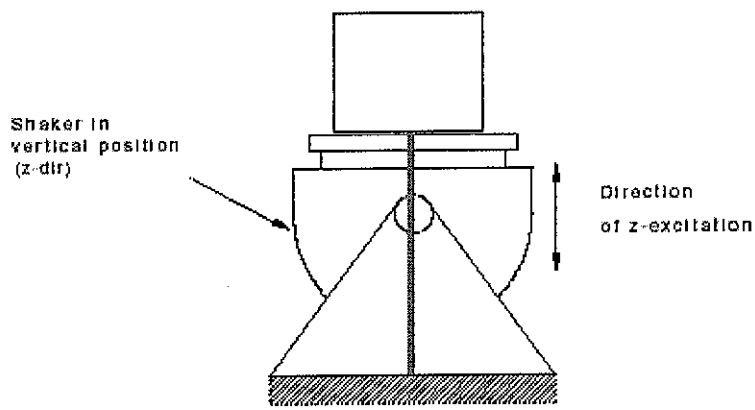

Figure 6-2: Shaker in position for the Z direction of test

Questo documento contiene informazioni di proprietà di CARLO GAVAZZI SPACE SpA. Tutti i diritti sono riservati
All information contained in this document are property of CARLO GAVAZZI SPACE SpA. All right reserved.

6.2 SHAKER CHARACTERISTICS

For Z direction vibration a shaker shall be used, for X and Y direction a sliding table shall be used.
The shaker and sliding table characteristics shall be annexed to the test data report as provided by the test laboratory.

6.3 SLIDING TABLE CHARACTERISTICS

For Z direction vibration a shaker shall be used, for X and Y direction a sliding table shall be used.
The shaker and sliding table characteristics shall be annexed to the test data report as provided by the test laboratory.

6.4 FIXTURE CHARACTERISTICS

The test adapter is designed to guarantee that the input vibration levels are transmitted from the exciter to the UUT without relevant amplification/degradation: the picture of the fixture envelope is shown in Figure 6-3, and the pattern is shown in Figure 6-4.

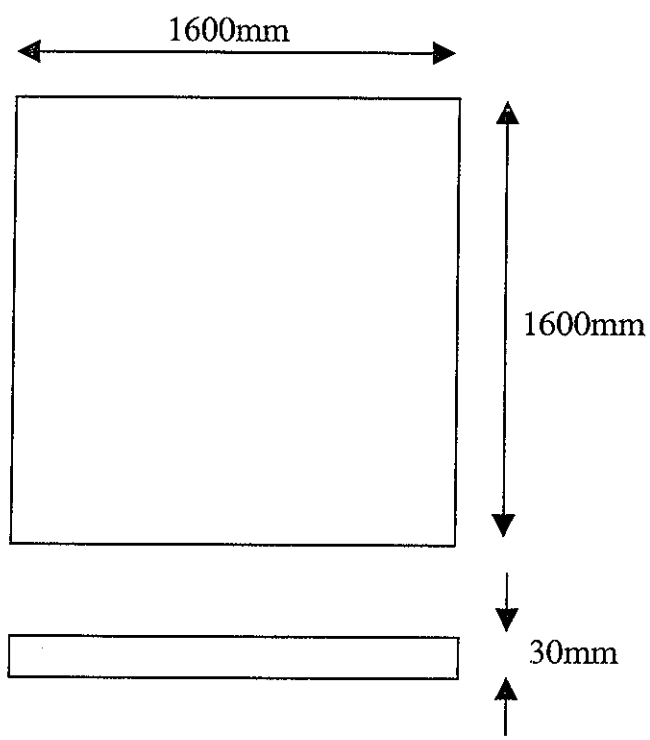

Figure 6-3: Fixture Envelope

Questo documento contiene informazioni di proprietà di CARLO GAVAZZI SPACE SpA. Tutti i diritti sono riservati.
All information contained in this document are property of CARLO GAVAZZI SPACE SpA. All right reserved.

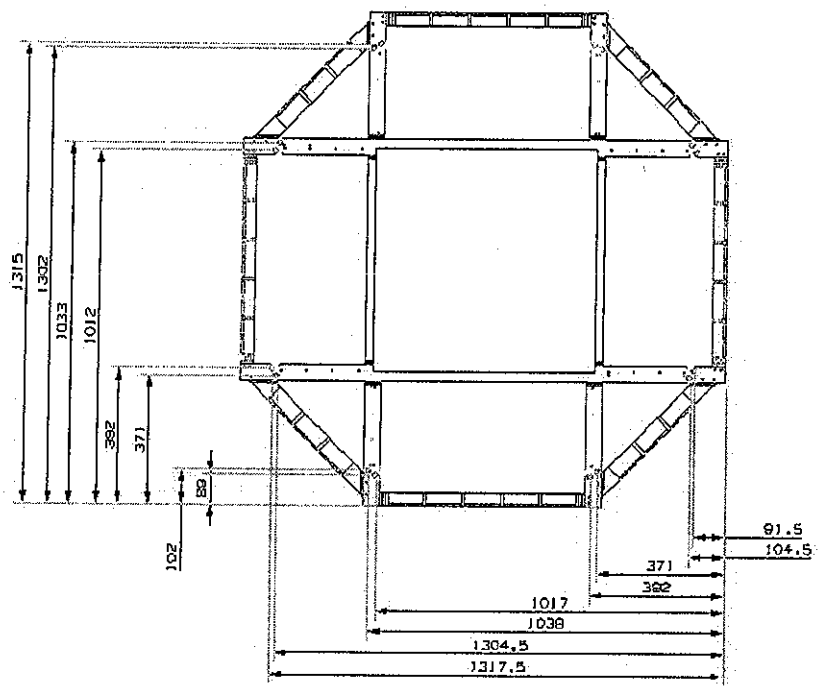

Figure 6-4: Fixture Pattern

Threaded inserts for NAS 1351-5 bolts shall be used.

Threaded inserts length shall be 2d minimum.

Fixture envelope is:

Dimension: 1600mm length, 1600mm width and 30mm height.

Questo documento contiene informazioni di proprietà di CARLO GAVAZZI SPACE SpA. Tutti i diritti sono riservati.
All information contained in this document are property of CARLO GAVAZZI SPACE SpA. All right reserved.

6.5 ACCELEROMETER CHARACTERISTICS

The accelerometer characteristics shall be annexed to the test data report as provided by the test laboratory.

7. TEST CONDITIONS

The UUT shall be mounted on the vibrator exciter by bolting it onto a rigid fixture in launch configuration.

The transmissibility characteristic of the rigid fixture will guarantee that the input vibration levels are transmitted from the exciter to the unit without relevant amplification/degradation (Table 9-1).

The UUT shall be powered OFF for all the test duration.

Unless otherwise specified, all the measurements are to be performed at the following ambient conditions:

Temperature:	20°C ±5°C
Relative humidity:	60% ±20% RH
Pressure:	Ambient
Cleanliness	Visibly clean

8. TEST RESPONSIBILITY

CGS is responsible for the application of all requirements stated in the applicable documents.

The technical responsibilities for testing and test results is of the Engineering department.
Project and test managers are responsible for the test program. The test engineer is responsible for the correct execution of the test program and for the fulfillment of the requirements, for measurement and recording and for the preparation of the test report.

Laboratories General disposition shall be applied to maximize personnel safety from potential hazards.

Questo documento contiene informazioni di proprietà di CARLO GAVAZZI SPACE SpA. Tutti i diritti sono riservati
All information contained in this document are property of CARLO GAVAZZI SPACE SpA. All right reserved.

9. SUCCESS CRITERIA

9.1 MECHANICAL CRITERIA

The success criteria, from the mechanical point of view, are the following ones (for each axis):

FM	*SUCCESS CRITERIA*
Fixture calibration	The transmissibility characteristic of the rigid fixture will guarantee that the input vibration levels are transmitted from the exciter to the unit without relevant amplification/degradation (less than 3dB between 5 and 500 Hz and ± 6 dB between 500 and 2000 dB).
Resonance search before random vibration	No relevant amplification below 50Hz
WM level random vibration	No structural yielding or failure
Resonance search after random vibration	No relevant differences with respect to the previously recorded sine resonance search data (15% on frequency shift, 30% on amplitude)

Table 9-1: Mechanical success criteria

These features will be checked during the vibration test and the results reported in the "step by step" RICH FM VIBRATION TEST REPORT.

9.2 FUNCTIONAL CRITERIA

Functional tests shall be carried out before and after the overall vibration test campaign by collaboration personnel. The flow chart (see chapter 18) highlights that a functional test will be performed at CIEMAT (Madrid); afterwards, the UUT will be the transported to the vibration test site, where the presence of the documentation stating the results of the functional test will be checked and noted in the "step by step" RICH FM VIBRATION TEST REPORT; this will be the required input to start with the vibration test.
After the vibration test, whose mechanical success criteria has been defined in the previous paragraph, the UUT will be transported to the aforementioned collaboration site, where the second functional test will be performed.
The success criteria for this test is the following one:

Functional test	No more than 2% of RICH detector PMTs damaged after vibration test

Table 9-2: Functional success criteria

A report of this test, stating the result about the aforementioned criteria, will be sent to CGS by the collaboration personnel.

10.OPERATIONAL RESTRICTIONS

All used instruments shall meet the necessary accuracy and shall not degrade the UUT performance.

Latex gloves will be used.

Questo documento contiene informazioni di proprietà di CARLO GAVAZZI SPACE SpA Tutti i diritti sono riservati
All information contained in this document are property of CARLO GAVAZZI SPACE SpA. All right reserved.

11.PARTICIPANTS REQUIRED

11.1 GENERAL

All tests shall be performed under QA surveillance in accordance with and following detailed procedure of CGS PA Plan.

Skilled personnel shall be employed.

The test shall be notified to the Customer as applicable.

11.2 QA WITNESS OF TESTS AND SIGN-OFF

QA inspector , or its delegate, shall witness all tests described in this procedure and shall sign the test data sheet, only for flight models.

12.NON-CONFORMANCE AND FAILURES

Any malfunction occurred during the tests shall be processed according to the Non-Conformance Procedure.

13.CALIBRATION REQUIREMENTS

All instruments used for testing shall be calibrated.
Evidence of certification shall be provided by a label attached to the instruments itself, showing the calibration date, the expire date and the signature of the operator.

Questo documento contiene informazioni di proprietà di CARLO GAVAZZI SPACE SpA. Tutti i diritti sono riservati.
All information contained in this document are property of CARLO GAVAZZI SPACE SpA. All right reserved.

14.MEASUREMENT ACCURACY

Test parameter tolerances shall be as follows:

Resonance search.

sweep rate = 2 oct/min ±5%. (1 sweep-up and down), amplitude g

Random vibration.

frequency: ±2%

power spectral density:

- 20 to 500 Hz (filter bandwidth 25 Hz or narrower)	±1.5 dB
- 500 to 2000 Hz	±3.0 dB
- Overall g_{RMS}	±1.5 dB

15.TEST PROCEDURE VARIATION SHEET

In case that for any reason the test procedure has to be changed, the change shall be described in a Procedure Variation Sheet (PVS) as shown in the next page.

The PVS shall contain:

Reference to the test procedure to be changed
Reference to the relevant test, procedure page and paragraph
Description of the change, possibly in the form was.....is.....
Reason for change
Test Engineer, QA, Test conductor signatures and dates
Customer signature and date (when required).

Each PVS shall be identified by a reference number provided in sequential order.

All the generated PVS shall be collected in a dedicated section of the Test Report.

Questo documento contiene informazioni di proprietà di CARLO GAVAZZI SPACE SpA. Tutti i diritti sono riservati
All information contained in this document are property of CARLO GAVAZZI SPACE SpA. All right reserved.

PROCEDURE VARIATION SHEET ref. N°:

Test Procedure Ref.:	Page Revised:	Paragraph Revised:

Description of Change:

Reason for Change:

CONCURRENCE

Test Cond	QA	System Eng.		Customer
Date	Date	Date		Date

Questo documento contiene informazioni di proprietà di CARLO GAVAZZI SPACE SpA Tutti i diritti sono riservati.
All information contained in this document are property of CARLO GAVAZZI SPACE SpA. All right reserved.

16.GENERAL PROCEDURE

16.1 TEST LEVELS

In the next pages the complete test sequence to be followed during the test is reported.
It shall be properly filled during test performance and form part - in addition to test results and analysis - of the relevant test report.

16.1.1 RANDOM TEST LEVEL

The Table 16-3 shows the Maximum Expected Flight Levels (MEFL) test environment for UUT (from AD1)

X Axis		
Frequency (Hz)	**PSD (g^2/Hz)**	**slope (dB/oct.)**
20-58	0.0025	
58-125		+9
125-300	0.025	
300-900		-9
900-2000	0.001	
Composite: 3.1 g_{RMS} Duration: 60 sec Direction: X axis.		

Table 16-1: Maximum Expected Flight Levels for the Alpha Magnetic Spectrometer – 02 ***X Axis***

Y Axis		
Frequency (Hz)	**PSD (g^2/Hz)**	**slope (dB/oct.)**
20-90	0.008	
90-100		+9
100-300	0.01	
300-650		-9
650-2000	0.001	
Composite: 2 3 g_{RMS} Duration: 60 sec Direction: Y axis.		

Table 16-2: Maximum Expected Flight Levels for the Alpha Magnetic Spectrometer – 02 ***Y Axis***

Z Axis		
Frequency (Hz)	**PSD (g^2/Hz)**	**slope (dB/oct.)**
20-45	0.009	
45-125		+3
125-300	0.025	
300-900		-9
900-2000	0.001	
Composite: 3.2 g_{RMS} Duration: 60 sec Direction: Z axis.		

Table 16-3: Maximum Expected Flight Levels for the Alpha Magnetic Spectrometer – 02 ***Z Axis***

Questo documento contiene informazioni di proprietà di CARLO GAVAZZI SPACE SpA Tutti i diritti sono riservati
All information contained in this document are property of CARLO GAVAZZI SPACE SpA. All right reserved.

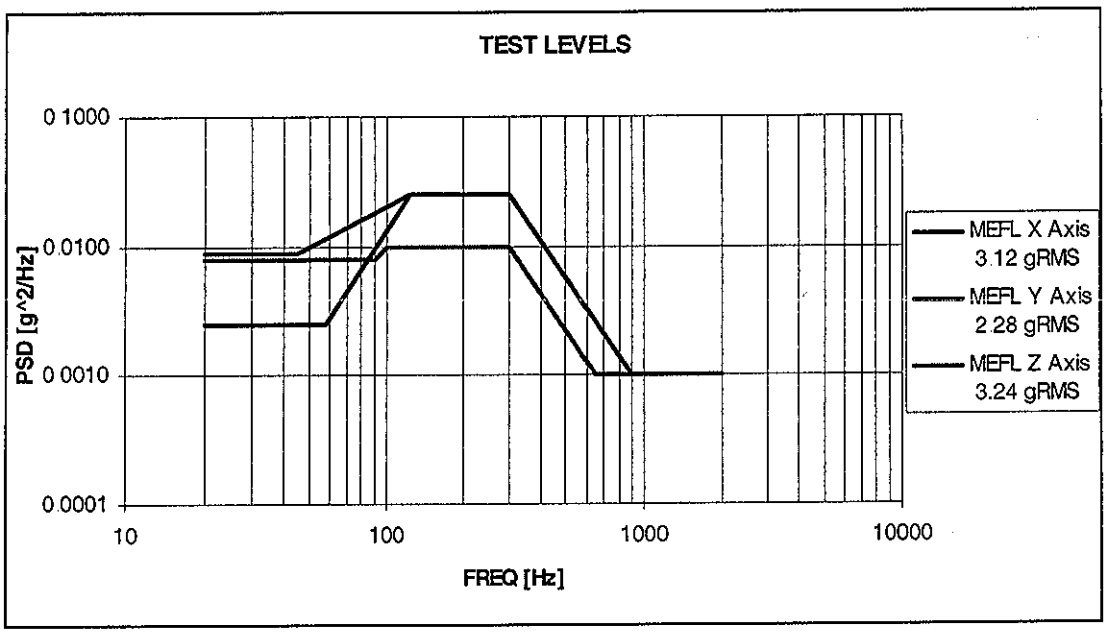

Figure 16-1: Test Random Vibration Levels X, Y and Z axes

Questo documento contiene informazioni di proprietà di CARLO GAVAZZI SPACE SpA. Tutti i diritti sono riservati
All information contained in this document are property of CARLO GAVAZZI SPACE SpA. All right reserved.

16.1.2 TEST LEVEL FOR RESONANCE SEARCH

The program for the shaker is explained in the following operations:

- Linear Frequency Scan
- Band: 5-2000 HZ
- Scan Speed 2 oct/min (Sweep Up Only)
- Level 0.3 g (Peak)

Questo documento contiene informazioni di proprietà di CARLO GAVAZZI SPACE SpA. Tutti i diritti sono riservati.
All information contained in this document are property of CARLO GAVAZZI SPACE SpA. All right reserved.

17.UUT ACCELEROMETER DISPOSITION:

SENSOR	LOCATION DESCRIPTION	MEASURED AXIS	REFERNCE TO FIGURE	REMARKS
CP 1	FIXTURE	Excited axis	Figure 17-1	Pilot
CP 2	FIXTURE	Excited axis	Figure 17-1	Pilot
MP 1	UUT – radiators	X, Y and Z	Figure 17-2	
MP 2	UUT – external structure	X, Y and Z	Figure 17-2	
MP 3	UUT – external structure	X, Y and Z	Figure 17-2	
MP 4	UUT – reflector	X, Y and Z	Figure 17-3	

Table 17-1: Accelerometers disposition

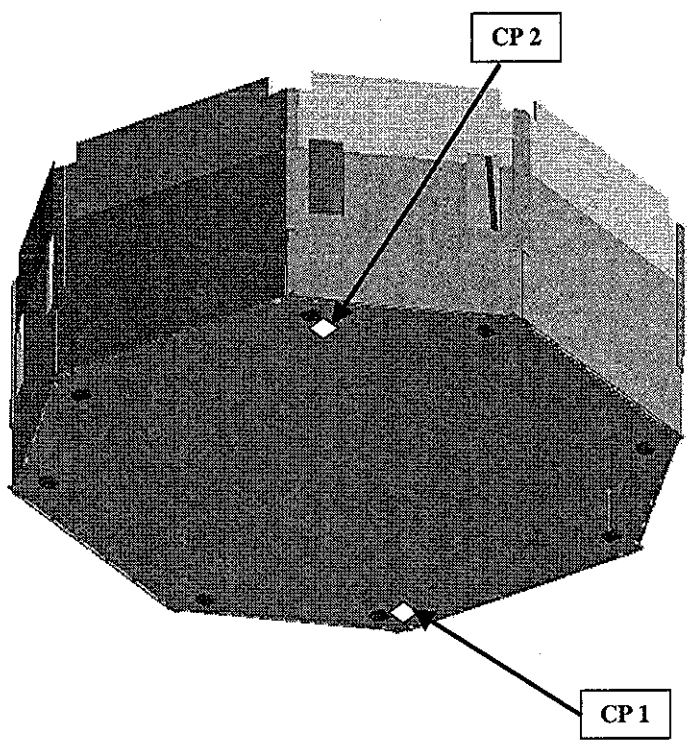

Figure 17-1: Pilot Accelerometers disposition

Questo documento contiene informazioni di proprietà di CARLO GAVAZZI SPACE SpA. Tutti i diritti sono riservati
All information contained in this document are property of CARLO GAVAZZI SPACE SpA. All right reserved.

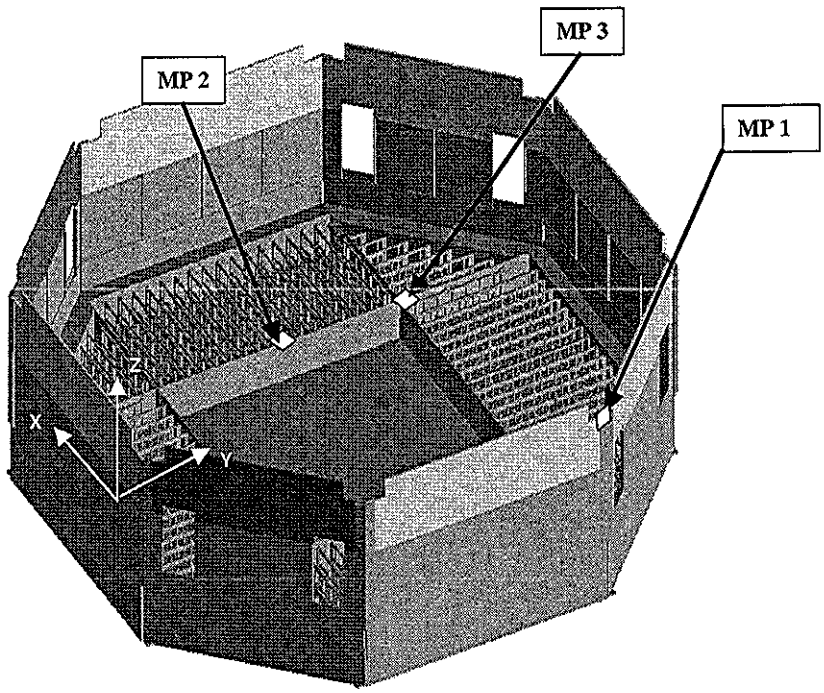

Figure 17-2: Accelerometers disposition

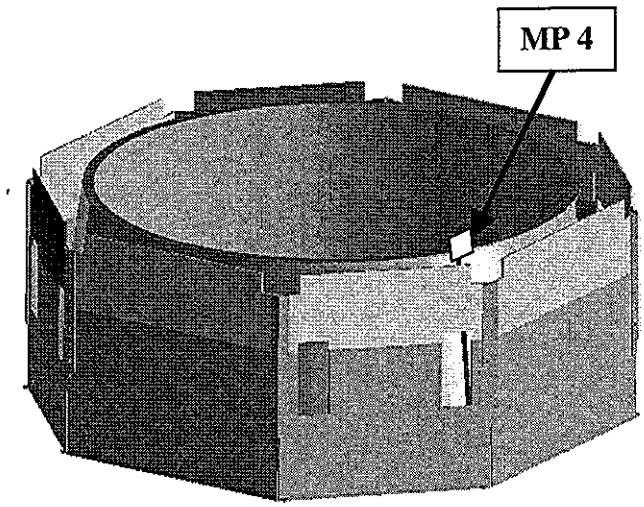

Figure 17-3: Accelerometers disposition

Questo documento contiene informazioni di proprietà di CARLO GAVAZZI SPACE SpA. Tutti i diritti sono riservati.
All information contained in this document are property of CARLO GAVAZZI SPACE SpA. All right reserved.

18.RICH FM FLOWCHART:

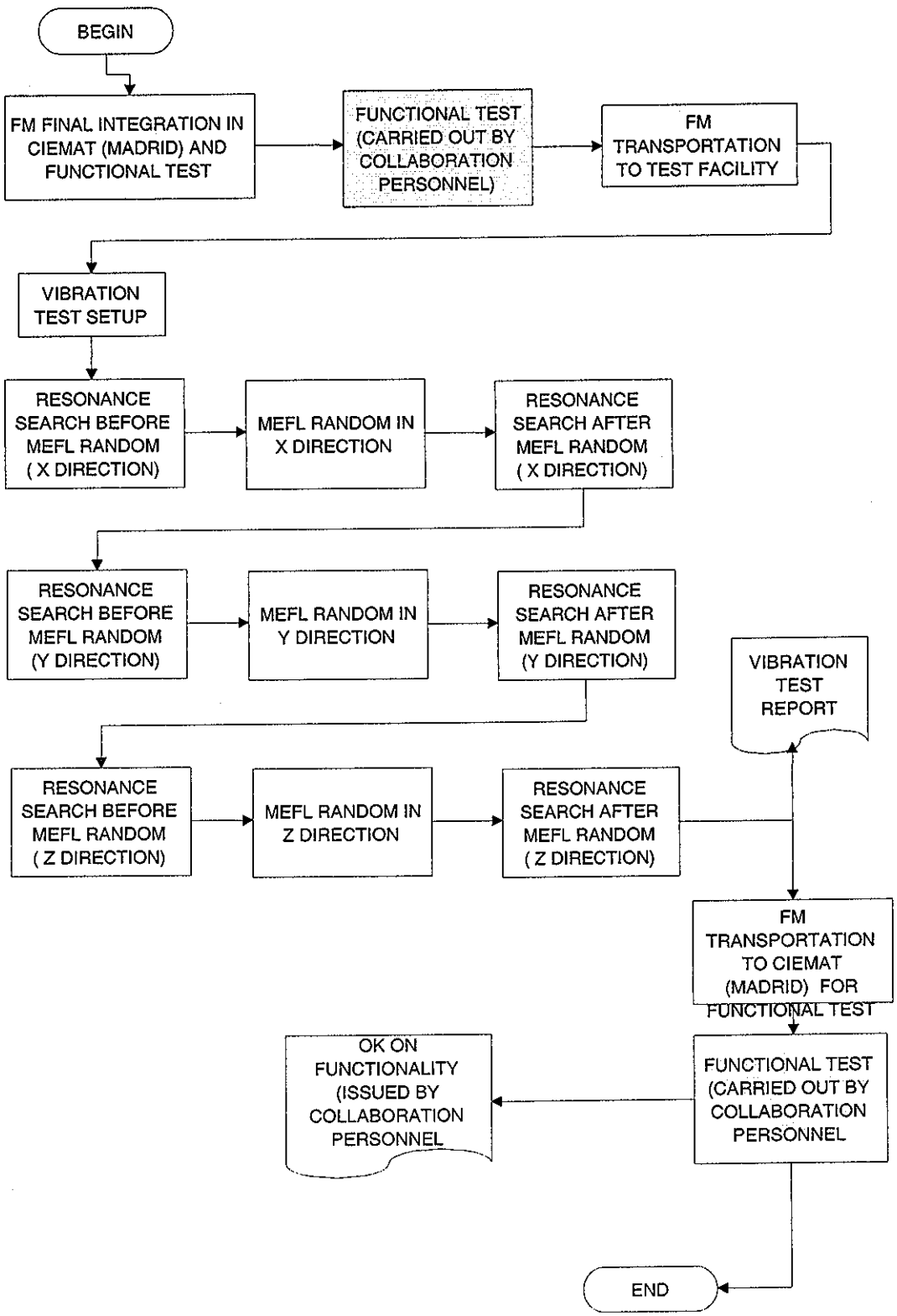

Questo documento contiene informazioni di proprietà di CARLO GAVAZZI SPACE SpA. Tutti i diritti sono riservati
All information contained in this document are property of CARLO GAVAZZI SPACE SpA. All right reserved.

19.VIBRATION TEST PROCEDURE (STEP BY STEP)

This paragraph explains all the procedures that shall be performed on the models.
Each test activity is defined in sequence and task by task, including measurement recording to be made.

In the sequence procedure is also contained the statement that the test article shall be tested in accordance with the approved procedure to be signed and dated by Test Conductor, Quality Assurance Representative and Customer Representative (where applicable).

Questo documento contiene informazioni di proprietà di CARLO GAVAZZI SPACE SpA. Tutti i diritti sono riservati
All information contained in this document are property of CARLO GAVAZZI SPACE SpA. All right reserved.

UUT DATA :	Model	Item	C.I.	S/N

STEP n°	TEST SEQUENCE	EXPECTED VALUE	MEASURED VALUE	REMARKS
1.	**FUNCTIONAL TEST REPORT CHECK**			
1.1.	CHECK THE PRESENCE, IN THE DETECTOR DELIVERY DATA PACKAGE, OF THE FUNCTIONAL TEST REPORT (PERFORMED BY COLLABORATION PERSONNEL) STATING THAT THE HARDWARE IS READY FOR THE VIBRATION TEST	YES		
2.	**UUT QUALIFICATION VIBRATION TEST IN X DIRECTION**			
2.1.	**RESONANCE SEARCH BEFORE MEFL RANDOM**			
2.1.1.	SCREW THE FIXTURE TO THE SLIDING TABLE FOR VIBRATION IN X DIRECTION	OK		
2.1.2.	INSTALL UUT ON FIXTURE FOR X DIRECTION VIBRATION (NAS 1351-5 screw torque 35 Nm)	OK		
2.1.3.	FIX CONTROL ACCELEROMETERS (CP) TO THE FIXTURE AS PER Figure 17-1	OK		
2.1.4.	FIX ACCELEROMETERS TO UUT AS PER Figure 17-2 AND Figure 17-3	OK		
2.1.5.	PERFORM A RESONANCE SEARCH (PROGRAM SHAKER ACCORDING TO 16.1.2) IF MULTIPOINT INPUT CONTROL IS USED SELECT HIGHEST POINT STRATEGY			
2.1.6.	ANNEX TO THE TEST REPORT THE RECORDING CHART AND SAVE FILE	OK		

DATE:	TEST CONDUCTOR	QA	CUSTOMER

Questo documento contiene informazioni di proprietà di CARLO GAVAZZI SPACE SpA. Tutti i diritti sono riservati.
All information contained in this document are property of CARLO GAVAZZI SPACE SpA. All right reserved.

UUT DATA :	Model	Item	C.I.	S/N

STEP n°	TEST SEQUENCE	EXPECTED VALUE	MEASURED VALUE	REMARKS
2.2.	**MEFL RANDOM VIBRATION IN X DIRECTION**			
2.2.1.	PROGRAM SHAKER ACCORDING TO Table 16-1 IF MULTIPOINT INPUT CONTROL IS USED SELECT MAXIMUM POINT STRATEGY	OK		
2.2.2.	PERFORM THE RANDOM VIBRATION TEST	OK		
2.2.3.	VISUAL INSPECTION OF THE TEST ARTICLE	No visual damages detected		
2.2.4.	ANNEX TO THE TEST REPORT THE RECORDING CHART AND SAVE FILE	OK		

DATE:	TEST CONDUCTOR	QA	CUSTOMER

Questo documento contiene informazioni di proprietà di CARLO GAVAZZI SPACE SpA. Tutti i diritti sono riservati.
All information contained in this document are property of CARLO GAVAZZI SPACE SpA. All right reserved.

UUT DATA :	Model	Item	C.I.	S/N

STEP n°	TEST SEQUENCE	EXPECTED VALUE	MEASURED VALUE	REMARKS
2.3.	**RESONANCE SEARCH AFTER MEFL RANDOM VIBRATION**			
2.3.1.	PERFORM A RESONANCE SEARCH AFTER RANDOM (PROGRAM SHAKER ACCORDING TO 16.1.2)	See chap 9		
2.3.2.	ANNEX TO THE TEST REPORT THE RECORDING CHART AND SAVE FILE	OK		
2.3.3.	REMOVE UUT MOUNTED ACCELEROMETERS	OK		
2.3.4.	CHECK I\F BOLTS TORQUE	OK		
2.3.5.	REMOVE UUT FROM FIXTURE	OK		
2.3.6.	REMOVE FIXTURE	OK		

DATE:	TEST CONDUCTOR	QA	CUSTOMER

Questo documento contiene informazioni di proprietà di CARLO GAVAZZI SPACE SpA. Tutti i diritti sono riservati.
All information contained in this document are property of CARLO GAVAZZI SPACE SpA. All right reserved.

UUT DATA :	Model	Item	C.I.	S/N

STEP n°	TEST SEQUENCE	EXPECTED VALUE	MEASURED VALUE	REMARKS
3.	**UUT QUALIFICATION VIBRATION TEST IN Y DIRECTION**			
3.1.	**RESONANCE SEARCH BEFORE MEFL RANDOM**			
3.1.1.	SCREW THE FIXTURE TO THE SLIDING TABLE FOR VIBRATION IN Y DIRECTION	OK		
3.1.2.	INSTALL UUT ON FIXTURE FOR Y DIRECTION VIBRATION (NAS 1351-5 screw torque 35 Nm)	OK		
3.1.3.	FIX CONTROL ACCELEROMETERS (CP) TO THE FIXTURE AS PER Figure 17-1	OK		
3.1.4.	FIX ACCELEROMETERS TO UUT AS PER Figure 17-2 AND Figure 17-3	OK		
3.1.5.	PERFORM A RESONANCE SEARCH (PROGRAM SHAKER ACCORDING TO 16.1.2) IF MULTIPOINT INPUT CONTROL IS USED SELECT HIGHEST POINT STRATEGY			
3.1.6.	ANNEX TO THE TEST REPORT THE RECORDING CHART AND SAVE FILE	OK		

DATE:	TEST CONDUCTOR	QA	CUSTOMER

Questo documento contiene informazioni di proprietà di CARLO GAVAZZI SPACE SpA. Tutti i diritti sono riservati.
All information contained in this document are property of CARLO GAVAZZI SPACE SpA. All right reserved.

UUT DATA :	Model	Item	C.I.	S/N

STEP n°	TEST SEQUENCE	EXPECTED VALUE	MEASURED VALUE	REMARKS
3.2.	**MEFL RANDOM VIBRATION IN Y DIRECTION**			
3.2.1.	PROGRAM SHAKER ACCORDING TO Table 16-2 IF MULTIPOINT INPUT CONTROL IS USED SELECT MAXIMUM POINT STRATEGY	OK		
3.2.2.	PERFORM THE RANDOM VIBRATION TEST	OK		
3.2.3.	VISUAL INSPECTION OF THE TEST ARTICLE	No visual damages detected		
3.2.4.	ANNEX TO THE TEST REPORT THE RECORDING CHART AND SAVE FILE	OK		

DATE:	TEST CONDUCTOR	QA	CUSTOMER

Questo documento contiene informazioni di proprietà di CARLO GAVAZZI SPACE SpA. Tutti i diritti sono riservati.
All information contained in this document are property of CARLO GAVAZZI SPACE SpA. All right reserved.

UUT DATA :	Model	Item	C.I.	S/N

STEP n°	TEST SEQUENCE	EXPECTED VALUE	MEASURED VALUE	REMARKS
3.3.	**RESONANCE SEARCH AFTER MEFL RANDOM VIBRATION**			
3.3.1.	PERFORM A RESONANCE SEARCH AFTER RANDOM (PROGRAM SHAKER ACCORDING TO 16.1.2)	See chap 9		
3.3.2.	ANNEX TO THE TEST REPORT THE RECORDING CHART AND SAVE FILE	OK		
3.3.3.	REMOVE UUT MOUNTED ACCELEROMETERS	OK		
3.3.4.	CHECK I\F BOLTS TORQUE	OK		
3.3.5.	REMOVE UUT FROM FIXTURE	OK		
3.3.6.	REMOVE FIXTURE	OK		

DATE:	TEST CONDUCTOR	QA	CUSTOMER

Questo documento contiene informazioni di proprietà di CARLO GAVAZZI SPACE SpA. Tutti i diritti sono riservati.
All information contained in this document are property of CARLO GAVAZZI SPACE SpA. All right reserved.

UUT DATA :	Model	Item	C.I.	S/N

STEP n°	TEST SEQUENCE	EXPECTED VALUE	MEASURED VALUE	REMARKS
4.	**UUT QUALIFICATION VIBRATION TEST IN Z DIRECTION**			
4.1.	**RESONANCE SEARCH BEFORE MEFL RANDOM**			
4.1.1.	SCREW THE FIXTURE TO THE SLIDING TABLE FOR VIBRATION IN Z DIRECTION	OK		
4.1.2.	INSTALL UUT ON FIXTURE FOR Z DIRECTION VIBRATION (NAS 1351-5 screw torque 35 Nm)	OK		
4.1.3.	FIX CONTROL ACCELEROMETERS (CP) TO THE FIXTURE AS PER Figure 17-1	OK		
4.1.4.	FIX ACCELEROMETERS TO UUT AS PER Figure 17-2 AND Figure 17-3	OK		
4.1.5.	PERFORM A RESONANCE SEARCH (PROGRAM SHAKER ACCORDING TO 16.1.2) IF MULTIPOINT INPUT CONTROL IS USED SELECT HIGHEST POINT STRATEGY			
4.1.6.	ANNEX TO THE TEST REPORT THE RECORDING CHART AND SAVE FILE	OK		

DATE:	TEST CONDUCTOR	QA	CUSTOMER

Questo documento contiene informazioni di proprietà di CARLO GAVAZZI SPACE SpA. Tutti i diritti sono riservati.
All information contained in this document are property of CARLO GAVAZZI SPACE SpA. All right reserved.

UUT DATA :	Model	Item	C.I.	S/N

STEP n°	TEST SEQUENCE	EXPECTED VALUE	MEASURED VALUE	REMARKS
4.2.	**MEFL RANDOM VIBRATION IN Z DIRECTION**			
4.2.1.	PROGRAM SHAKER ACCORDING TO Table 16-3 IF MULTIPOINT INPUT CONTROL IS USED SELECT MAXIMUM POINT STRATEGY	OK		
4.2.2.	PERFORM THE RANDOM VIBRATION TEST	OK		
4.2.3.	VISUAL INSPECTION OF THE TEST ARTICLE	No visual damages detected		
4.2.4.	ANNEX TO THE TEST REPORT THE RECORDING CHART AND SAVE FILE	OK		

DATE:	TEST CONDUCTOR	QA	CUSTOMER

Questo documento contiene informazioni di proprietà di CARLO GAVAZZI SPACE SpA. Tutti i diritti sono riservati.
All information contained in this document are property of CARLO GAVAZZI SPACE SpA. All right reserved.

UUT DATA :	Model	Item	C.I.	S/N

STEP n°	TEST SEQUENCE	EXPECTED VALUE	MEASURED VALUE	REMARKS
4.3.	**RESONANCE SEARCH AFTER MEFL RANDOM VIBRATION**			
4.3.1.	PERFORM A RESONANCE SEARCH AFTER RANDOM (PROGRAM SHAKER ACCORDING TO 16.1.2)	See chap 9		
4.3.2.	ANNEX TO THE TEST REPORT THE RECORDING CHART AND SAVE FILE	OK		
4.3.3.	REMOVE UUT MOUNTED ACCELEROMETERS	OK		
4.3.4.	CHECK I\F BOLTS TORQUE	OK		
4.3.5.	REMOVE UUT FROM FIXTURE	OK		
4.3.6.	REMOVE FIXTURE	OK		
5.	**FINAL FUNCTIONAL TEST REPORT CHECK**			
5.1.	CHECK THE FINAL FUNCTIONAL TEST REPORT (PERFORMED BY COLLABORATION PERSONNEL) STATING THE STATUS OF THE PMTS AFTER THE VIBRATION TEST	See chap 9		

DATE:	TEST CONDUCTOR	QA	CUSTOMER

Questo documento contiene informazioni di proprietà di CARLO GAVAZZI SPACE SpA. Tutti i diritti sono riservati.
All information contained in this document are property of CARLO GAVAZZI SPACE SpA. All right reserved.