PROCEDURES

LIST OF DOCUMENTS INCLUDED IN THIS SECTION:

DOCUMENT NUMBER	ISSUE	TITLE
RICSYS-PR-CGS-007	3	RICH FM VIBRATION TEST PROCEDURE

All information contained in this document are property of CARLO GAVAZZI SPACE SpA. All rights reserved.

CARLO GAVAZZI SPACE SpA	RICH SYSTEM ORIGINALE ARCHIVIO

Tipo Doc.: *Doc.Type:*	PROCEDURE				N°DRD: *DRD N°:*	NA	
N°Doc.: *Doc. N°:*	**RICSYS-PR-CGS-007**	Ediz.: *Issue:*	**3**	Data: *Date:*	**20/08/2007**	Pagina *Page* **1**	Di *Of* **50**
Titolo : *Title :*	RICH FM VIBRATION TEST PROCEDURE						

	Nome & Funzione *Name & Function*	Firma *Signature*	Data *Date*
Preparato da: *Prepared by:*	A. Bursi (DT/MT)	Alessandro Bursi	27/08/07
Approvato da: *Approved by:*	X Cinquepalmi C. (PC/CC/) X Cremonesi L. (PA/SF) Molina M. (DT/MT/) Olivier M. (DT/MT/)	[illegible] [illegible] [illegible] M. Olivier	27/8/07 27/8/07 27/8/2007 27/08/07
Applicazione autorizzata da: *Application authorized by:*	Olivier M. (DT/MT/)	M. Olivier	27/08/07
Customer / Higher Level Contractor			
Accettato da: *Accepted by:*			
Approvato da: *Approved by:*			

LISTA DI DISTRIBUZIONE *DISTRIBUTION LIST*	N	A	I
Interna / *Internal*			
Esterna / *External*			
ASI	1		x
INFN BO	1		

N=Numero di copie A=Applicazione I=Informazione
N=Number of copy A=Application I=Information

Gestione documenti: *Data Management:* Mtermite 27/8/7
Firma / *Signature* Data / *Date*

File: RICSYS-PR-CGS-007_issue_3.doc

Questo documento contiene informazioni di proprietà di CARLO GAVAZZI SPACE SpA: Tutti i diritti sono riservati
All information contained in this document are property of CARLO GAVAZZI SPACE SpA. All right reserved.

REGISTRAZIONE DELLE MODIFICHE / *CHANGE RECORD*

EDIZIONE *ISSUE*	DATA *DATE*	AUTORIZZAZIONE *CHANGE AUTHORITY*	OGGETTO DELLA MODIFICA E SEZIONI AFFETTE *REASON FOR CHANGE AND AFFECTED SECTIONS*
1	01/10/2003		First emission
2	18/11/2003		Updated "success criteria" chapter (pag 12) and "step by step" table (pag 23)
3	20\08\2007		Added clarifications on test setup and test predictions.

Questo documento contiene informazioni di proprietà di CARLO GAVAZZI SPACE SpA. Tutti i diritti sono riservati.
All information contained in this document are property of CARLO GAVAZZI SPACE SpA. All right reserved.

LISTA DELLE PAGINE VALIDE / *LIST OF VALID PAGES*

PAGINA *PAGE*	EDIZIONE *ISSUE*	PAGINA *PAGE*	EDIZIONE *ISSUE*	PAGINA *PAGE*	EDIZIONE *ISSUE*	PAGINA *PAGE*	EDIZIONE *ISSUE*	PAGINA *PAGE*	EDIZIONE *ISSUE*
1 - 50	3								

Questo documento contiene informazioni di proprietà di CARLO GAVAZZI SPACE SpA. Tutti i diritti sono riservati.
All information contained in this document are property of CARLO GAVAZZI SPACE SpA. All right reserved.

TABLE OF CONTENT

LIST OF TABLES 5
LIST OF FIGURES 5

1. SCOPE 6

2. DOCUMENTS 6

2.1 APPLICABLE DOCUMENTS 6
2.2 REFERENCE DOCUMENTS 6

3. ACRONYMS 6

4. TESTED ITEMS 7

5. TEST OBJECTIVE 9

6. FACILITY DESCRIPTION 9

6.1 TEST SETUP (SHAKER AND SLIDING TABLE) 9
6.2 FIXTURE CHARACTERISTICS 10
6.3 ACCELEROMETER CHARACTERISTICS 12

7. TEST CONDITIONS 12

8. TEST RESPONSIBILITY 12

9. SUCCESS CRITERIA 13

10. OPERATIONAL RESTRICTIONS 14

10.1 RICH HANDLING 14
10.2 RICH HOISTING FIXTURE 15

11. PARTICIPANTS REQUIRED 16

11.1 GENERAL 16
11.2 QA WITNESS OF TESTS AND SIGN-OFF 16

12. NON-CONFORMANCE AND FAILURES 16

13. CALIBRATION REQUIREMENTS 16

14. MEASUREMENT ACCURACY 17

15. TEST PROCEDURE VARIATION SHEET 17

16. GENERAL PROCEDURE 19

17. TEST LEVELS 19

17.1 RANDOM TEST LEVEL (MEFL) 19
17.2 RANDOM TEST AXES 21
17.2.1 TEST LEVEL FOR RESONANCE SEARCH 22

18. UUT ACCELEROMETER DISPOSITION 23

19. RICH FM FLOWCHART: 28

20. NOTCHING 29

Questo documento contiene informazioni di proprietà di CARLO GAVAZZI SPACE SpA. Tutti i diritti sono riservati.
All information contained in this document are property of CARLO GAVAZZI SPACE SpA. All right reserved.

20.1 NOTCHING FOR PMT ACCELERATION 29
20.2 NOTCHING FOR COG ACCELERATION 30
20.3 NOTCHING FOR REFLECTOR ACCELERATION 34

21. VIBRATION TEST PROCEDURE (STEP BY STEP) 40

LIST OF TABLES

Table 9-1: Success criteria 13
Table 17-1: Maximum Expected Flight Levels for the Alpha Magnetic Spectrometer – 02 **X Axis** 19
Table 17-2: Maximum Expected Flight Levels for the Alpha Magnetic Spectrometer – 02 **Y Axis** 19
Table 17-3: Maximum Expected Flight Levels for the Alpha Magnetic Spectrometer – 02 **Z Axis** 20
Table 17-4: Alpha Magnetic Spectrometer – 02 **Axes and RICH test axes** 21
Table 18-1: Accelerometers disposition 23
Table 20-1 Acceleration limit for the lower skin measurement points 29
Table 20-2 CoG acceleration limit 30
Table 20-3 Scale factors to determine the CoG acceleration levels 30
Table 20-4 Reflector acceleration limit 34

LIST OF FIGURES

Figure 4-1: Model of the UUT 7
Figure 4-2: UUT DIMENSIONS 8
Figure 6-1: Shaker in position for the X and Y directions of test 9
Figure 6-2: Shaker in position for the Z direction of test 9
Figure 6-3: Fixture Design 10
Figure 6-4: RICH- Fixture I\F Pattern 11
Figure 10-1: Rich hoisting fixture 15
Figure 17-1: Test Random Vibration Levels X, Y and Z axes 20
Figure 18-1: Pilot Accelerometers disposition 23
Figure 18-2: Grids Accelerometers disposition 24
Figure 18-3 External Structure accelerometer suggested position 25
Figure 18-4 Reflector accelerometer position 26
Figure 18-5 Debris shield accelerometer suggested position 27
Figure 20-1 X-Input: MP7 output Vs CoG response 31
Figure 20-2 Y-Input: MP9 output Vs CoG response 32
Figure 20-3 Z-Input: MP8 output Vs CoG response 33
Figure 20-4 X-Input MP12 XYZ outputs 36
Figure 20-5 Y-Input MP12 XYZ outputs 37
Figure 20-6 Y-Input MP12 XYZ outputs 39

Questo documento contiene informazioni di proprietà di CARLO GAVAZZI SPACE SpA. Tutti i diritti sono riservati.
All information contained in this document are property of CARLO GAVAZZI SPACE SpA. All right reserved.

1. SCOPE

This document defines the procedure to test the RICH SYSTEM FM for the vibration environment. Qualification of the design shall be accomplished using Flight Model hardware. The objectives of the test shall be to verify all the specified performance of the hardware assembled with flight materials and components under applicable mechanical environment and I/F conditions:

No structural yielding or failures. (AD 1).
No functional degradation due to vibration loads (AD 1).

2. DOCUMENTS

2.1 APPLICABLE DOCUMENTS

AD #	Document Number	Issue/Date	Rev.	Title/Applicability
1	JSC-28792	DEC, 2001	B	Alpha Magnetic Spectrometer – 02 Structural Verification Plan for the Space Transportation System and the International Space Station
2	I/020/03/0	14/05/2003		Allegato tecnico-manageriale CGS al contratto AMS02/RICH/TOF/ECAL

2.2 REFERENCE DOCUMENTS

RD#	Doc Number	Issue	Date	Rev	Title
1	GD-PL-CGS-001	3	17/03/99	n/a	Product Assurance & RAMS Plan
2	ECSS-E-10-03A	n/a	15/02/02	n/a	Space Engineering - Testing

3. ACRONYMS

A.D.	APPLICABLE DOCUMENTS
FEM	FINITE ELEMENT MODEL
FM	FLIGHT MODEL
I/F	INTERFACE
MEFL	MAXIMUM EXPECTED FLIGHT LEVEL
QM	QUALIFICATION MODEL
R.D.	REFERENCE DOCUMENTS
UUT	UNIT UNDER TEST

Questo documento contiene informazioni di proprietà di CARLO GAVAZZI SPACE SpA. Tutti i diritti sono riservati.
All information contained in this document are property of CARLO GAVAZZI SPACE SpA. All right reserved.

4. TESTED ITEMS

Tested item, called UUT is:

MODEL	ITEM	C.I.	Drawing Number/Part Number	S/N	NOTES
FM	RICH-SYSTEM (ICD)	NA	10-RICHSYS-00.001	1	

The agreed test configuration with INFN is composed by the following sub-items:
CGS tested Hardware :

- Main structure (FM)
- Secondary structure (FM)
- Mirror (FM)
- TCS components (heaters an thermostats FM)

INFN tested Hardware:

- Assembled PMT grids (FM)
- Electronics (FM)
- Harness (FM+dummies)
- Debris shielding (FM)

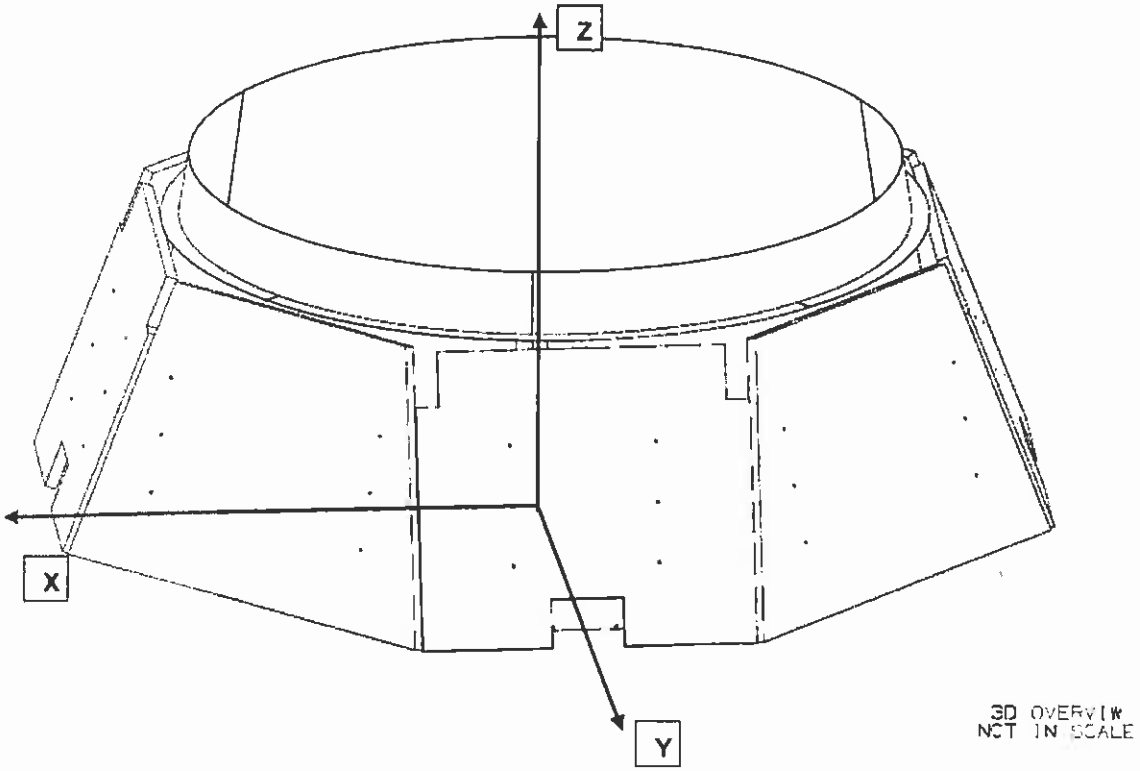

Figure 4-1: Model of the UUT

Questo documento contiene informazioni di proprietà di CARLO GAVAZZI SPACE SpA. Tutti i diritti sono riservati.
All information contained in this document are property of CARLO GAVAZZI SPACE SpA. All right reserved.

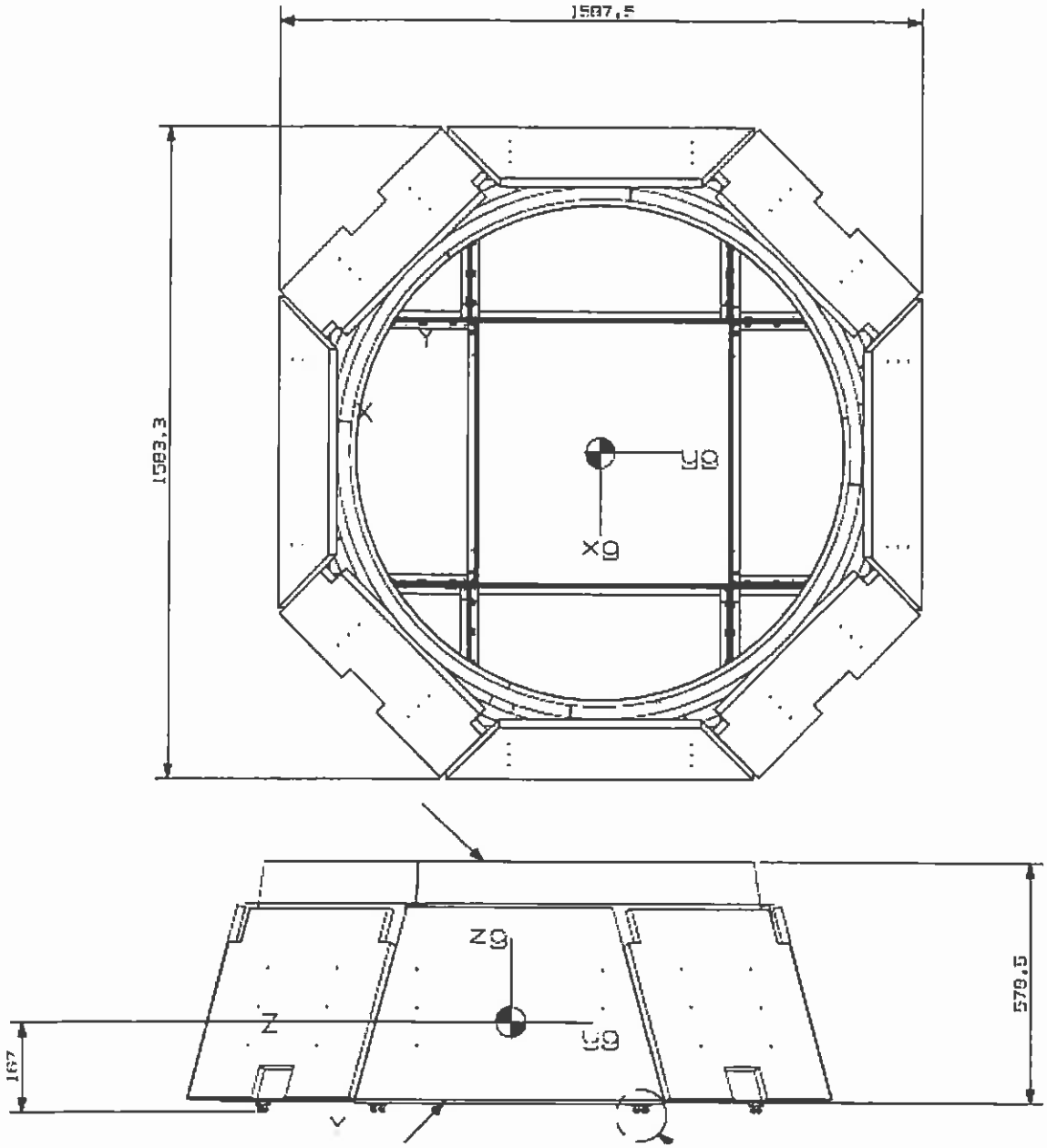

Figure 4-2: UUT DIMENSIONS

For the UUT, mass property and envelope are:

Mass: 179.9Kg (+\-10%)
Dimension: 1405mm length, 1410mm width and 619.4mm height

Questo documento contiene informazioni di proprietà di CARLO GAVAZZI SPACE SpA. Tutti i diritti sono riservati.
All information contained in this document are property of CARLO GAVAZZI SPACE SpA. All right reserved.

5. TEST OBJECTIVE

This test is required to demonstrate the unit to withstand the MEFL, to verify the absence of material-workmanship defects.
The UUT shall be subject to a visual inspection before and after test.
Functional check shall be performed before and after test campaign by the AMS-02 collaboration.
THE UUT SHALL BE POWERED OFF DURING VIBRATION.

6. FACILITY DESCRIPTION

The vibration tests shall be executed at INTA (Madrid) external laboratory in a proper area.

6.1 TEST SETUP (SHAKER AND SLIDING TABLE)

For Z direction vibration a shaker shall be used, for X and Y direction a sliding table shall be used.
The shaker and sliding table characteristics shall be annexed to the test data report as provided by the test laboratory.

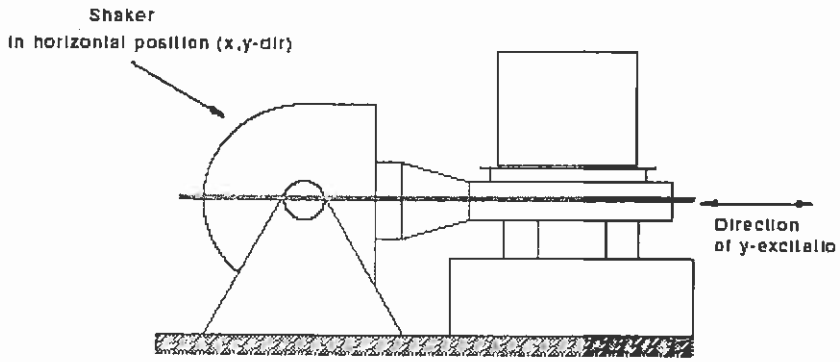

Figure 6-1: Shaker in position for the X and Y directions of test

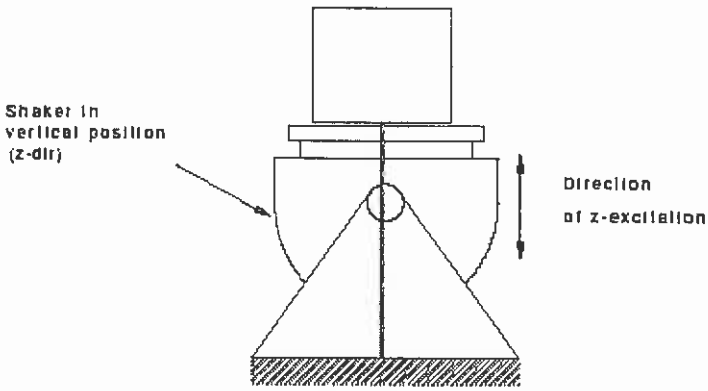

Figure 6-2: Shaker in position for the Z direction of test

Questo documento contiene informazioni di proprietà di CARLO GAVAZZI SPACE SpA. Tutti i diritti sono riservati.
All information contained in this document are property of CARLO GAVAZZI SPACE SpA. All right reserved.

6.2 FIXTURE CHARACTERISTICS

The test adapter is designed to guarantee that the input vibration levels are transmitted from the exciter to the UUT without relevant amplification/degradation.
Moreover the selected design allow to install the RICH on the shaker without dismounting the reflector between one axis and the other. t
The picture of the fixture is shown in Figure 6-3, and the RICH I\F pattern is shown in Figure 6-4.

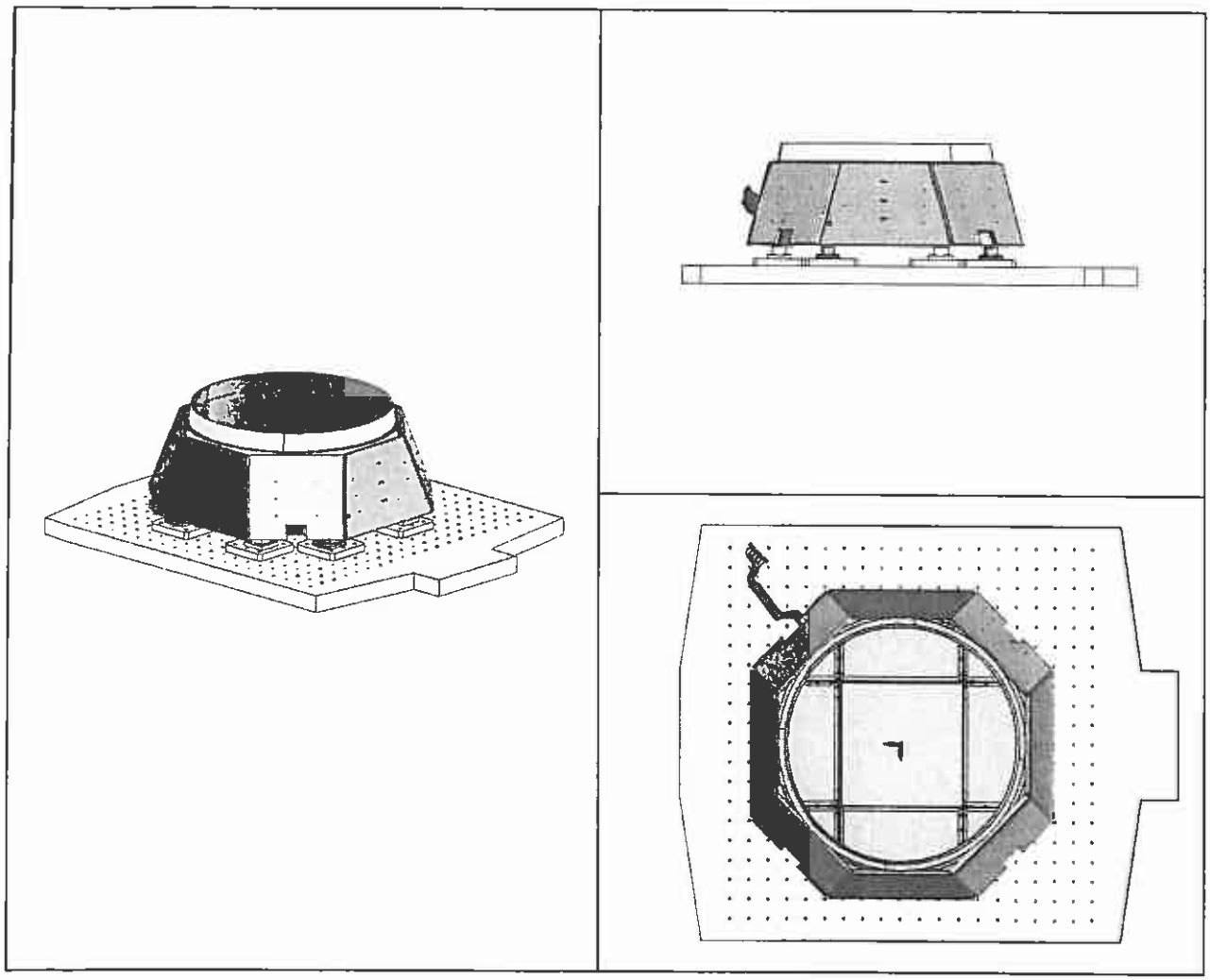

Figure 6-3: Fixture Design

Questo documento contiene informazioni di proprietà di CARLO GAVAZZI SPACE SpA. Tutti i diritti sono riservati.
All information contained in this document are property of CARLO GAVAZZI SPACE SpA. All right reserved.

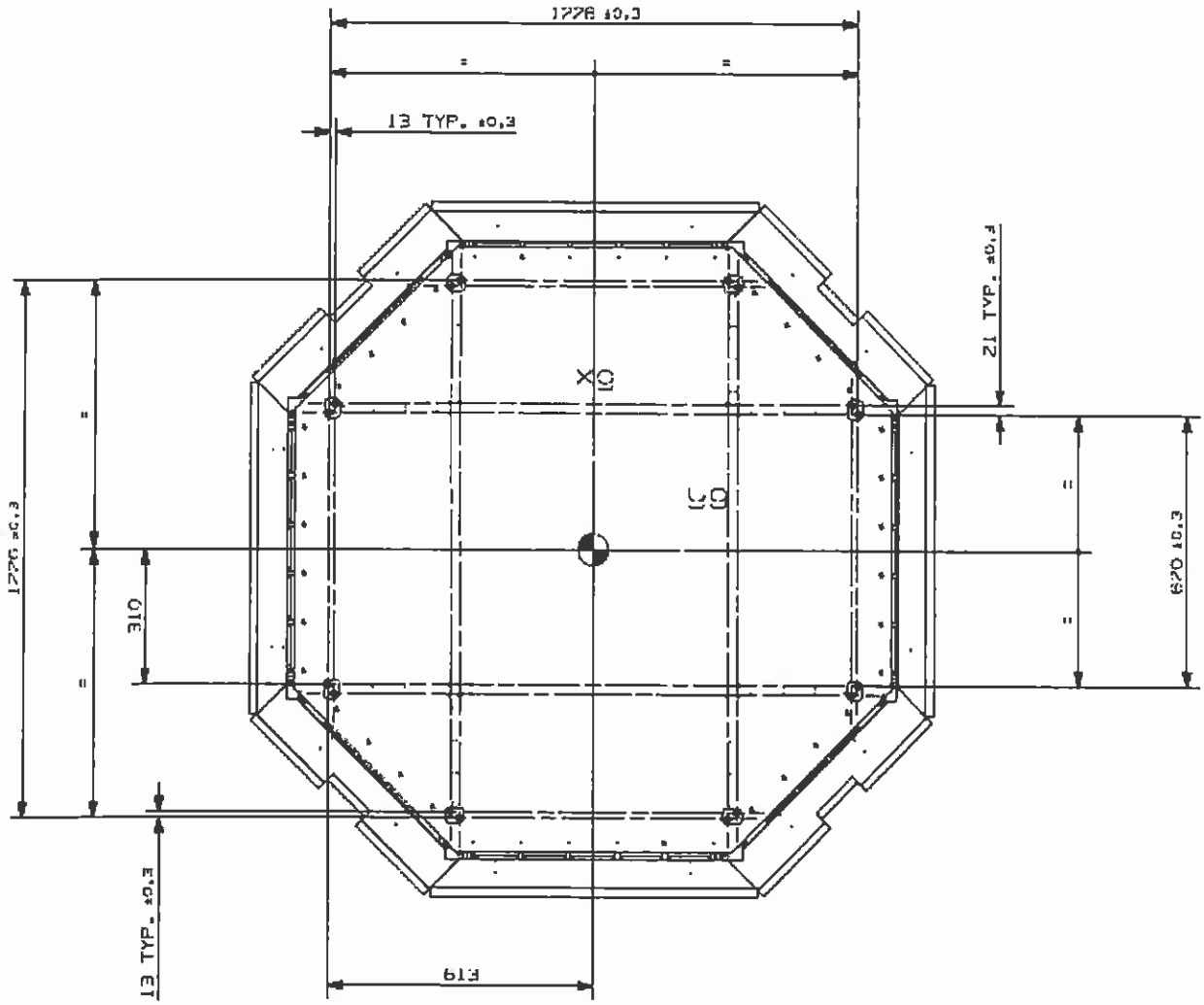

Figure 6-4: RICH- Fixture I\F Pattern

Threaded inserts for NAS 1351-5 bolts shall be used.

Threaded inserts length shall be 2d minimum.

Questo documento contiene informazioni di proprietà di CARLO GAVAZZI SPACE SpA. Tutti i diritti sono riservati.
All information contained in this document are property of CARLO GAVAZZI SPACE SpA. All right reserved.

6.3 ACCELEROMETER CHARACTERISTICS

The accelerometer characteristics shall be annexed to the test data report as provided by the test laboratory.

7. TEST CONDITIONS

The UUT shall be mounted on the vibrator exciter by bolting it onto a rigid fixture in launch configuration.

The transmissibility characteristic of the rigid fixture will guarantee that the input vibration levels are transmitted from the exciter to the unit without relevant amplification/degradation (Table 9-1).

The UUT shall be powered OFF for all the test duration.

Unless otherwise specified, all the measurements are to be performed at the following ambient conditions:

Temperature:	20℃ ±5℃
Relative humidity:	60% ±20% RH
Pressure:	Ambient
Cleanliness	Visibly clean

8. TEST RESPONSIBILITY

CGS is responsible for the application of all requirements stated in the applicable documents.

The technical responsibilities for testing and test results is of the Engineering department.
Project and test managers are responsible for the test program. The test engineer is responsible for the correct execution of the test program and for the fulfillment of the requirements, for measurement and recording and for the preparation of the test report.

Laboratories General disposition shall be applied to maximize personnel safety from potential hazards.

INFN skilled personnel shall provide support to handling and UUT preparation and shall be responsible for the INFN provided hardware under test (see chp 4).

Questo documento contiene informazioni di proprietà di CARLO GAVAZZI SPACE SpA. Tutti i diritti sono riservati.
All information contained in this document are property of CARLO GAVAZZI SPACE SpA. All right reserved.

9. SUCCESS CRITERIA

9.1 MECHANICAL CRITERIA

The random vibration tests shall be performed in the following way (for each axis):

FM	*SUCCESS CRITERIA*
Fixture calibration	The transmissibility characteristic of the rigid fixture will guarantee that the input vibration levels are transmitted from the exciter to the unit without relevant amplification/degradation (less than 3dB between 5 and 500 Hz and ± 6 dB between 500 and 2000 dB).
Resonance search before random vibration	No relevant amplification below 50Hz
WM level random vibration	No structural yielding or failure
Resonance search after random vibration	No relevant differences with respect to the previously recorded sine resonance search data (15% on frequency shift, 30% on amplitude)

Table 9-1: Success criteria

Functional tests shall be carried out before and after the overall vibration test campaign.

9.2 FUNCTIONAL CRITERIA

Functional tests shall be carried out before and after the overall vibration test campaign by collaboration personnel. The flow chart (see chapter 18) highlights that a functional test will be performed at CIEMAT (Madrid); afterwards, the UUT will be the transported to the vibration test site, where the presence of the documentation stating the results of the functional test will be checked and noted in the "step by step" RICH FM VIBRATION TEST REPORT; this will be the required input to start with the vibration test.
After the vibration test, whose mechanical success criteria has been defined in the previous paragraph, the UUT will be transported to the aforementioned collaboration site, where the second functional test will be performed.
The success criteria for this test is the following one:

Functional test	No more than 2% of RICH detector PMTs damaged after vibration test

Table 9-2: Functional success criteria

A report of this test, stating the result about the aforementioned criteria, will be sent to CGS by the collaboration personnel.

Questo documento contiene informazioni di proprietà di CARLO GAVAZZI SPACE SpA. Tutti i diritti sono riservati.
All information contained in this document are property of CARLO GAVAZZI SPACE SpA. All right reserved.

10.OPERATIONAL RESTRICTIONS

All used instruments shall meet the necessary accuracy and shall not degrade the UUT performance.

10.1 RICH HANDLING

- Lifting and handling of the RICH shall be performed under supervision of INFN\AMS-02 Collaboration responsibles using dedicated hoisting fixtures.
- Latex gloves will be used.
- All the assembly activities related to the mirror and debris installation shall be performed by skilled collaboration personnel and CGS personnel.
- Alcool and other volatile solvents cannot be used near to the RICH for sensitivity of the used materials of the light guides.
- The Light guides and mirror shall be protected between one vibration run and the other covering the UUT.
- Adequate protection means for contamination during operations in the vibration Facility shall be provided by the Collaboration

Questo documento contiene informazioni di proprietà di CARLO GAVAZZI SPACE SpA. Tutti i diritti sono riservati.
All information contained in this document are property of CARLO GAVAZZI SPACE SpA. All right reserved.

10.2 RICH HOISTING FIXTURE

The following dedicated hoisting fixture shall be used to handle the RICH during vibration test session:

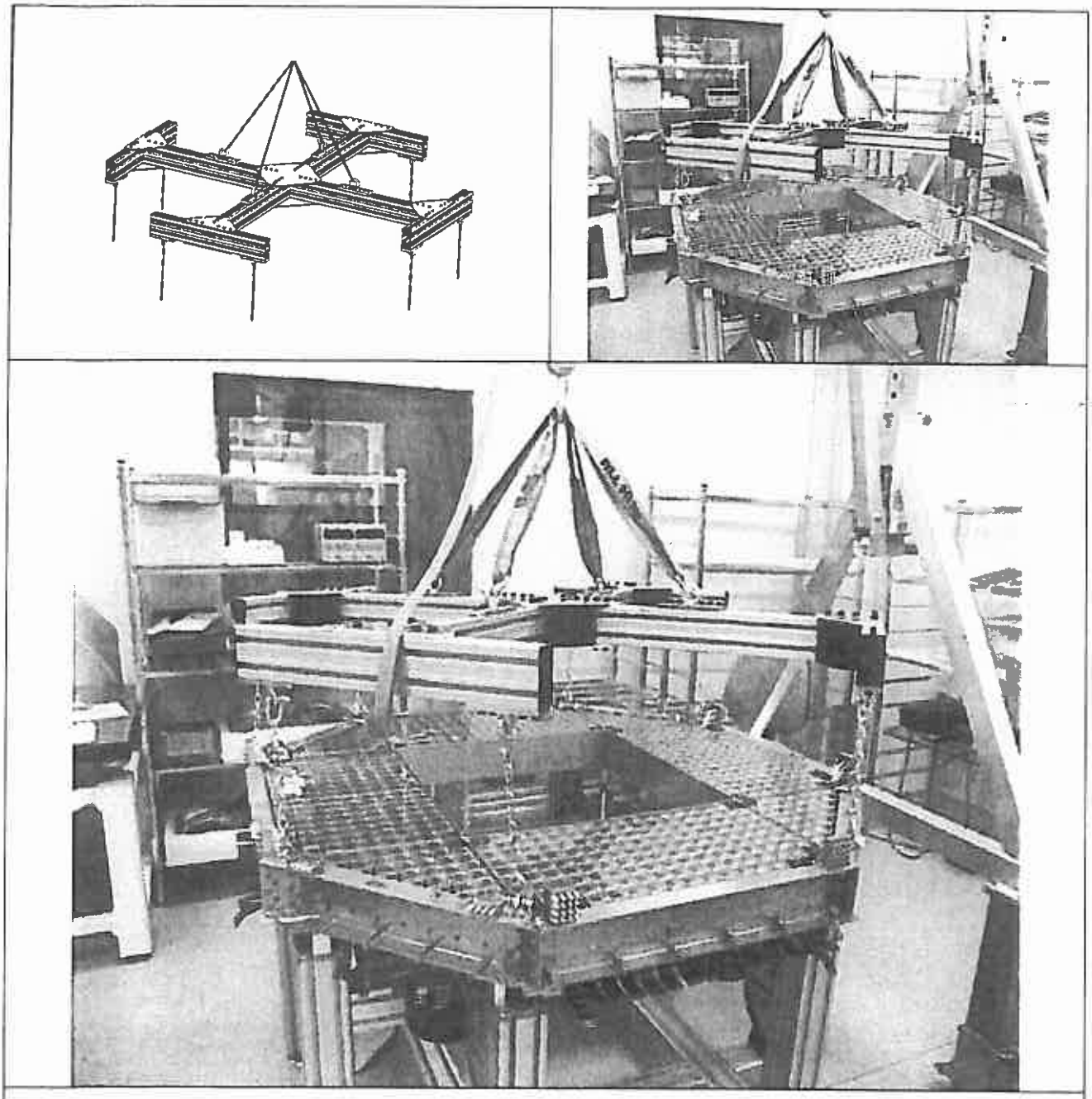

Figure 10-1: Rich hoisting fixture

Questo documento contiene informazioni di proprietà di CARLO GAVAZZI SPACE SpA. Tutti i diritti sono riservati.
All information contained in this document are property of CARLO GAVAZZI SPACE SpA. All right reserved.

11.PARTICIPANTS REQUIRED

11.1 GENERAL

All tests shall be performed under QA surveillance in accordance with and following detailed procedure of CGS PA Plan.

Skilled personnel shall be employed.

The test shall be notified to the Customer as applicable.

11.2 QA WITNESS OF TESTS AND SIGN-OFF

QA inspector , or its delegate, shall witness all tests described in this procedure and shall sign the test data sheet, only for flight models.

12.NON-CONFORMANCE AND FAILURES

Any malfunction occurred during the tests shall be processed according to the Non-Conformance Procedure.

13.CALIBRATION REQUIREMENTS

All instruments used for testing shall be calibrated.
Evidence of certification shall be provided by a label attached to the instruments itself, showing the calibration date, the expire date and the signature of the operator.

Questo documento contiene informazioni di proprietà di CARLO GAVAZZI SPACE SpA. Tutti i diritti sono riservati.
All information contained in this document are property of CARLO GAVAZZI SPACE SpA. All right reserved.

14.MEASUREMENT ACCURACY

Test parameter tolerances shall be as follows:

Resonance search.

sweep rate = 2 oct/min ±5%. (1 sweep-up and down), amplitude g

Random vibration.

frequency: ±2%

power spectral density:

- 20 to 500 Hz (filter bandwidth 25 Hz or narrower)	±1.5 dB
- 500 to 2000 Hz	±3.0 dB
- Overall g_{RMS}	±1.5 dB

15.TEST PROCEDURE VARIATION SHEET

In case that for any reason the test procedure has to be changed, the change shall be described in a Procedure Variation Sheet (PVS) as shown in the next page.

The PVS shall contain:

Reference to the test procedure to be changed
Reference to the relevant test, procedure page and paragraph
Description of the change, possibly in the form was....is.....
Reason for change
Test Engineer, QA, Test conductor signatures and dates
Customer signature and date (when required).

Each PVS shall be identified by a reference number provided in sequential order.

All the generated PVS shall be collected in a dedicated section of the Test Report.

Questo documento contiene informazioni di proprietà di CARLO GAVAZZI SPACE SpA. Tutti i diritti sono riservati.
All information contained in this document are property of CARLO GAVAZZI SPACE SpA. All right reserved.

PROCEDURE VARIATION SHEET ref. N°:

Test Procedure Ref.:	Page Revised:	Paragraph Revised:

Description of Change:

Reason for Change:

CONCURRENCE

Test Cond.	QA	System Eng.		Customer
Date	Date	Date		Date

Questo documento contiene informazioni di proprietà di CARLO GAVAZZI SPACE SpA. Tutti i diritti sono riservati.
All information contained in this document are property of CARLO GAVAZZI SPACE SpA. All right reserved.

16.GENERAL PROCEDURE

For each vibration axis the following sequence is applicable:

- Fixture callbration
- Resonance search before random vibration
- WM -3dB level random vibration
- WM level random vibration
- Resonance search after random vibration

17.TEST LEVELS

In the next pages the complete test sequence to be followed during the test is reported.
It shall be properly filled during test performance and form part - in addition to test results and analysis - of the relevant test report.

17.1 RANDOM TEST LEVEL (MEFL)

The Table 17-3 shows the Maximum Expected Flight Levels (MEFL) test environment for UUT (from AD1)

X Axis		
Frequency (Hz)	PSD (g^2/Hz)	slope (dB/oct.)
20-58	0.0025	
58-125		+9
125-300	0.025	
300-900		-9
900-2000	0.001	
Composite: 3.1 g_{RMS} Duration: 60 sec Direction: X axis.		

Table 17-1: Maximum Expected Flight Levels for the Alpha Magnetic Spectrometer – 02 ***X Axis***

Y Axis		
Frequency (Hz)	PSD (g^2/Hz)	slope (dB/oct.)
20-90	0.008	
90-100		+9
100-300	0.01	
300-650		-9
650-2000	0.001	
Composite: 2.3 g_{RMS} Duration: 60 sec Direction: Y axis.		

Table 17-2: Maximum Expected Flight Levels for the Alpha Magnetic Spectrometer – 02 ***Y Axis***

Questo documento contiene informazioni di proprietà di CARLO GAVAZZI SPACE SpA. Tutti i diritti sono riservati.
All information contained in this document are property of CARLO GAVAZZI SPACE SpA. All right reserved.

Z Axis		
Frequency (Hz)	PSD (g^2/Hz)	slope (dB/oct.)
20-45	0.009	
45-125		+3
125-300	0.025	
300-900		-9
900-2000	0.001	
Composite: 3.2 g_{RMS} Duration: 60 sec Direction: Z axis.		

Table 17-3: Maximum Expected Flight Levels for the Alpha Magnetic Spectrometer – 02 **Z Axis**

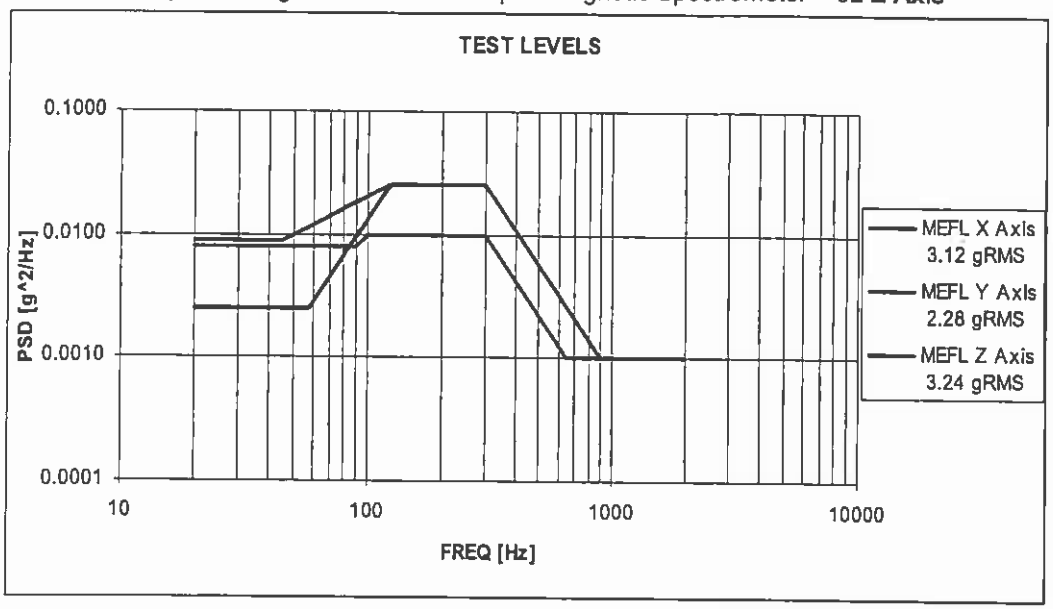

Figure 17-1: Test Random Vibration Levels X, Y and Z axes

Questo documento contiene informazioni di proprietà di CARLO GAVAZZI SPACE SpA. Tutti i diritti sono riservati.
All information contained in this document are property of CARLO GAVAZZI SPACE SpA. All right reserved.

17.2 RANDOM TEST AXES

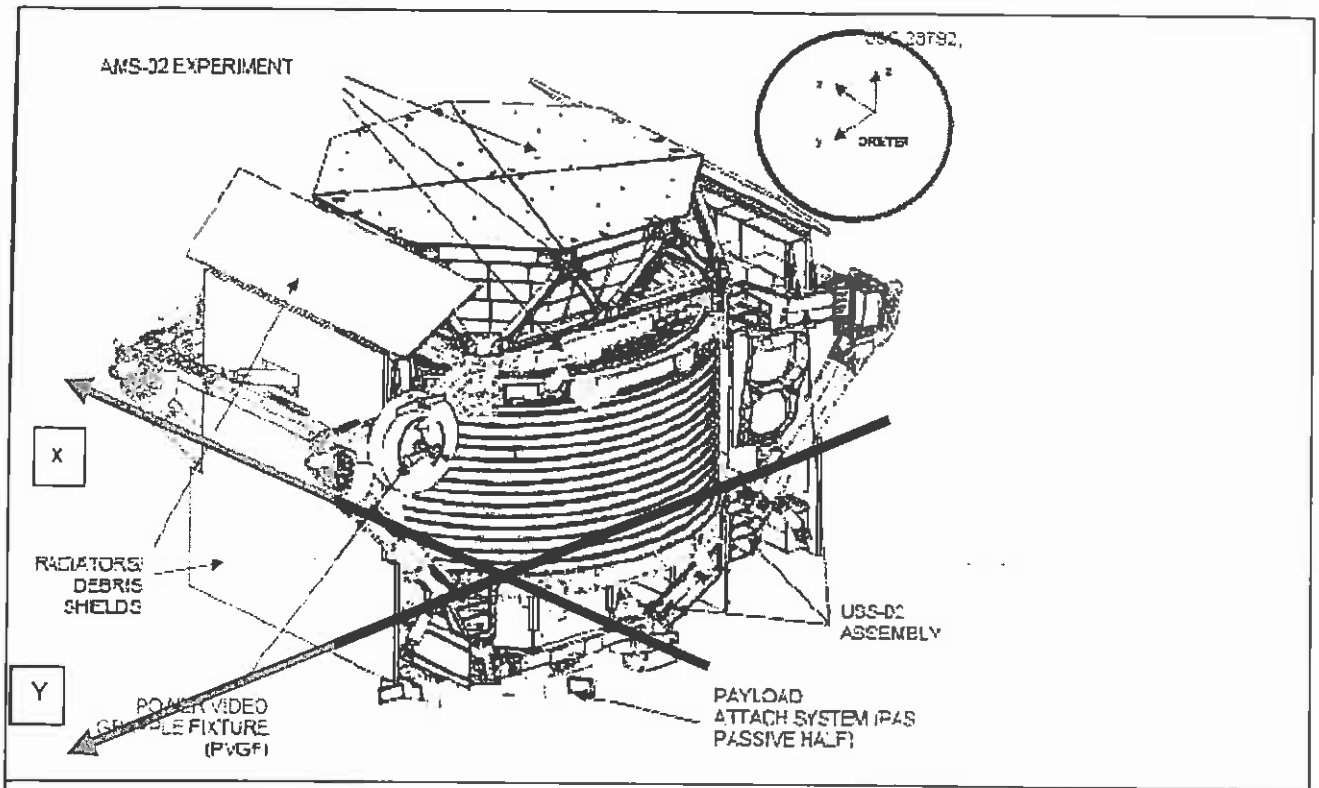

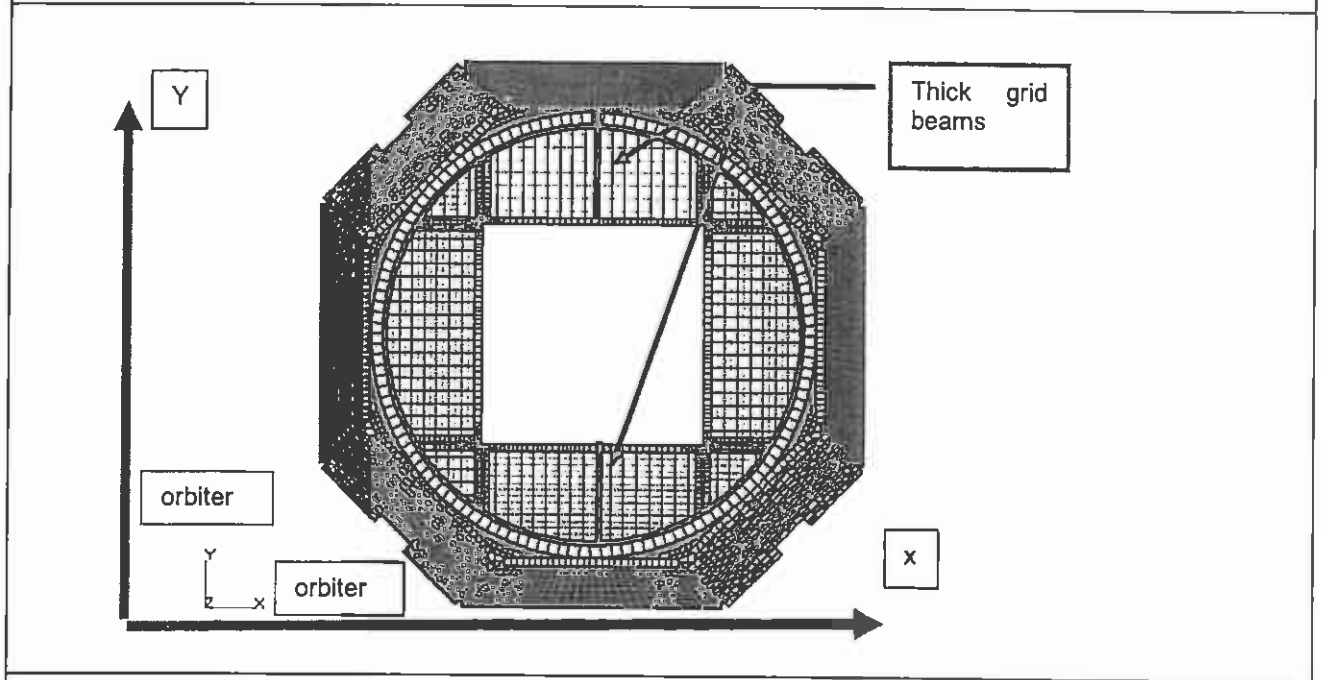

Table 17-4: Alpha Magnetic Spectrometer – 02 ***Axes and RICH test axes***

Questo documento contiene informazioni di proprietà di CARLO GAVAZZI SPACE SpA. Tutti i diritti sono riservati.
All information contained in this document are property of CARLO GAVAZZI SPACE SpA. All right reserved.

17.2.1 TEST LEVEL FOR RESONANCE SEARCH

The program for the shaker is explained in the following operations:

- Linear Frequency Scan
- Band: 5-2000 HZ
- Scan Speed 2 oct/min (Sweep Up Only)
- Level 0.3 g (Peak)

Questo documento contiene informazioni di proprietà di CARLO GAVAZZI SPACE SpA. Tutti i diritti sono riservati.
All information contained in this document are property of CARLO GAVAZZI SPACE SpA. All right reserved.

18.UUT ACCELEROMETER DISPOSITION

The following instrumentation plan shall be used. The accelerometers position shall be reported (picture) on the test report.

SENSOR	LOCATION DESCRIPTION	MEASURED AXIS	REMARKS
CP 1-2	FIXTURE	Excited axis + CROSS AXES	Pilot on excited axis
MP 1-6	UUT – grids	X, Y and Z	
MP 7-11	UUT – main structure	X, Y and Z	
MP 12-15	UUT – reflector	X, Y and Z	
MP 16-21	UUT – debris shields	X, Y and Z	

Table 18-1: Accelerometers disposition.

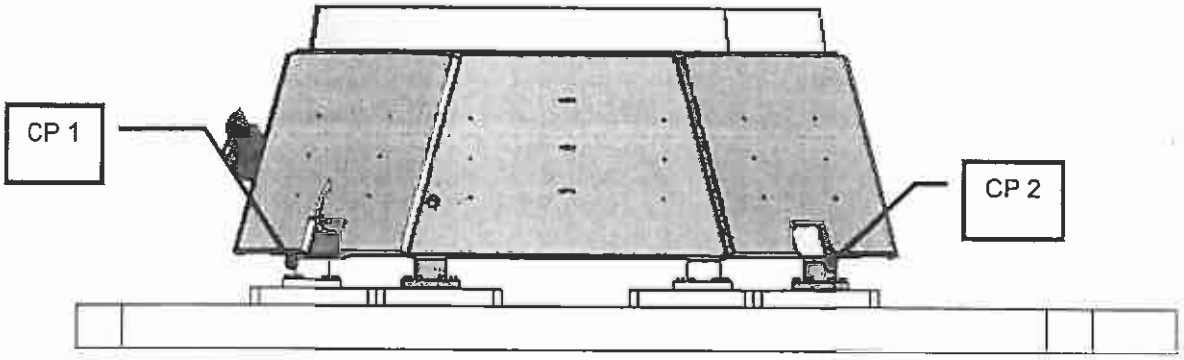

Figure 18-1: Pilot Accelerometers disposition

Questo documento contiene informazioni di proprietà di CARLO GAVAZZI SPACE SpA. Tutti i diritti sono riservati.
All information contained in this document are property of CARLO GAVAZZI SPACE SpA. All right reserved.

The following figure shows the accelerometer selected areas evaluating the gRMS maps for lower skin.

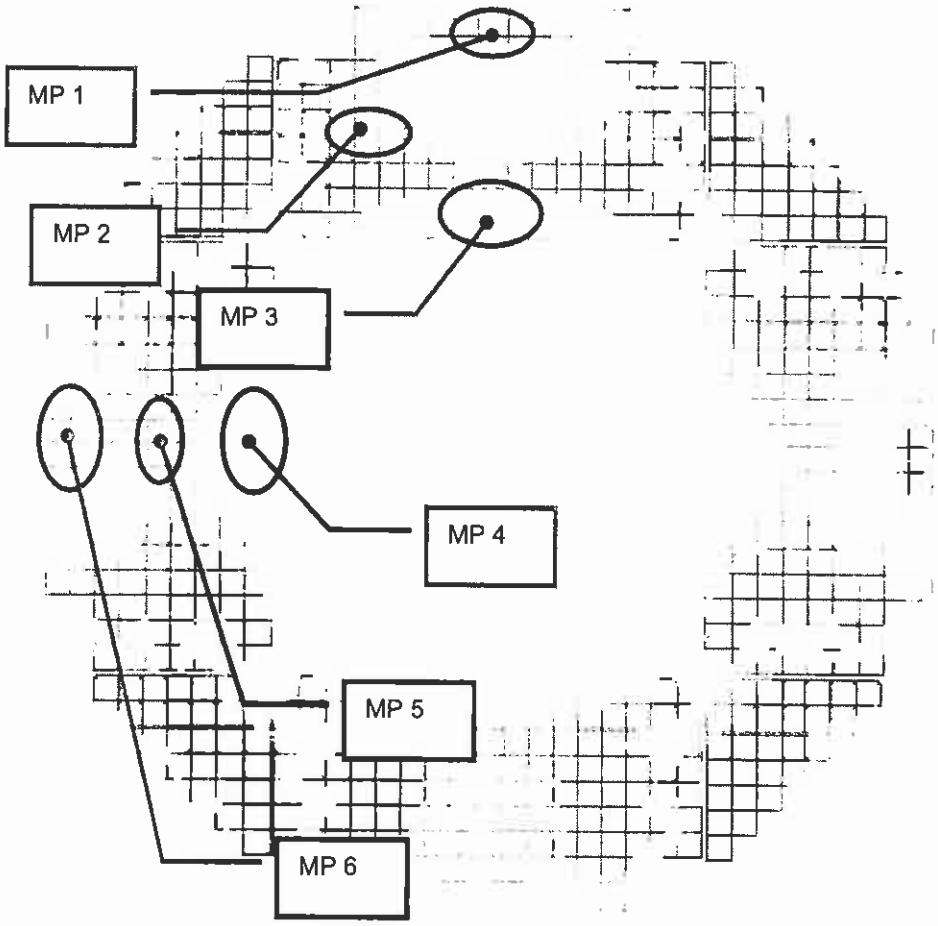

Figure 18-2: Grids Accelerometers disposition

Questo documento contiene informazioni di proprietà di CARLO GAVAZZI SPACE SpA. Tutti i diritti sono riservati.
All information contained in this document are property of CARLO GAVAZZI SPACE SpA. All right reserved.

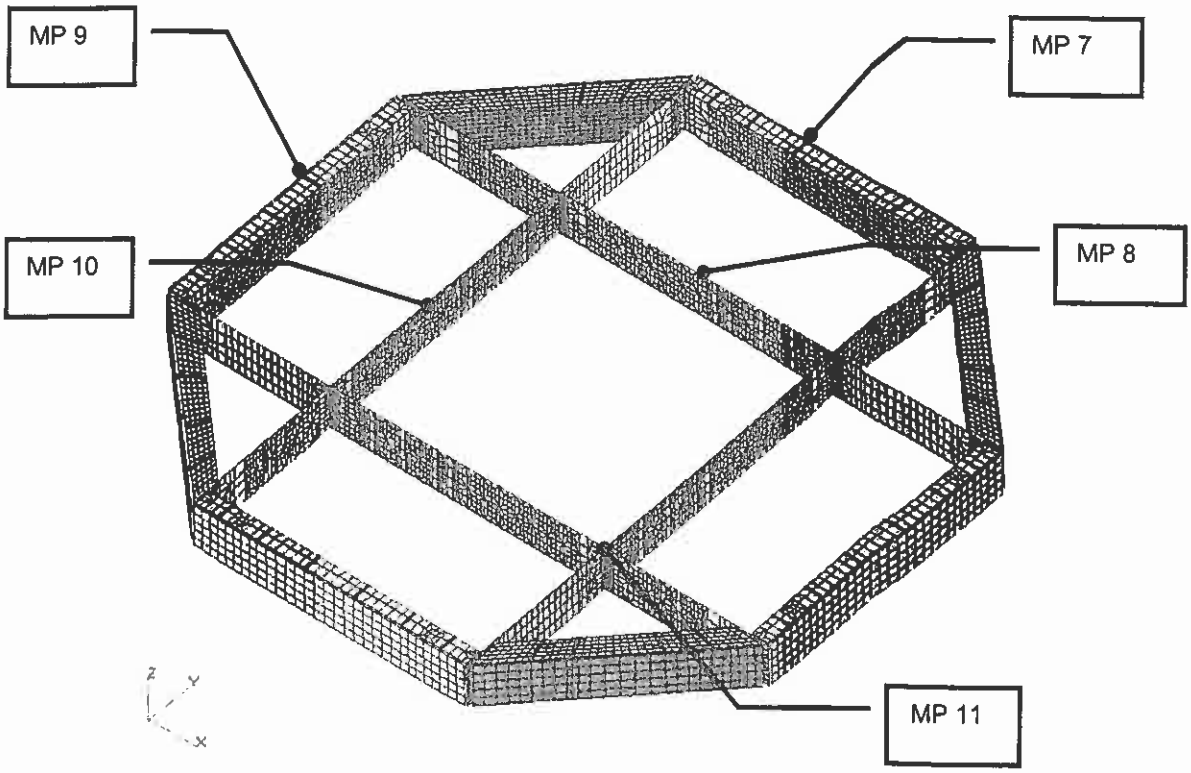

Figure 18-3 External Structure accelerometer suggested position

The following figure shows the selected position for the reflector to monitor the interface acceleration and the amplification on reflector top.

Questo documento contiene informazioni di proprietà di CARLO GAVAZZI SPACE SpA. Tutti i diritti sono riservati.
All information contained in this document are property of CARLO GAVAZZI SPACE SpA. All right reserved.

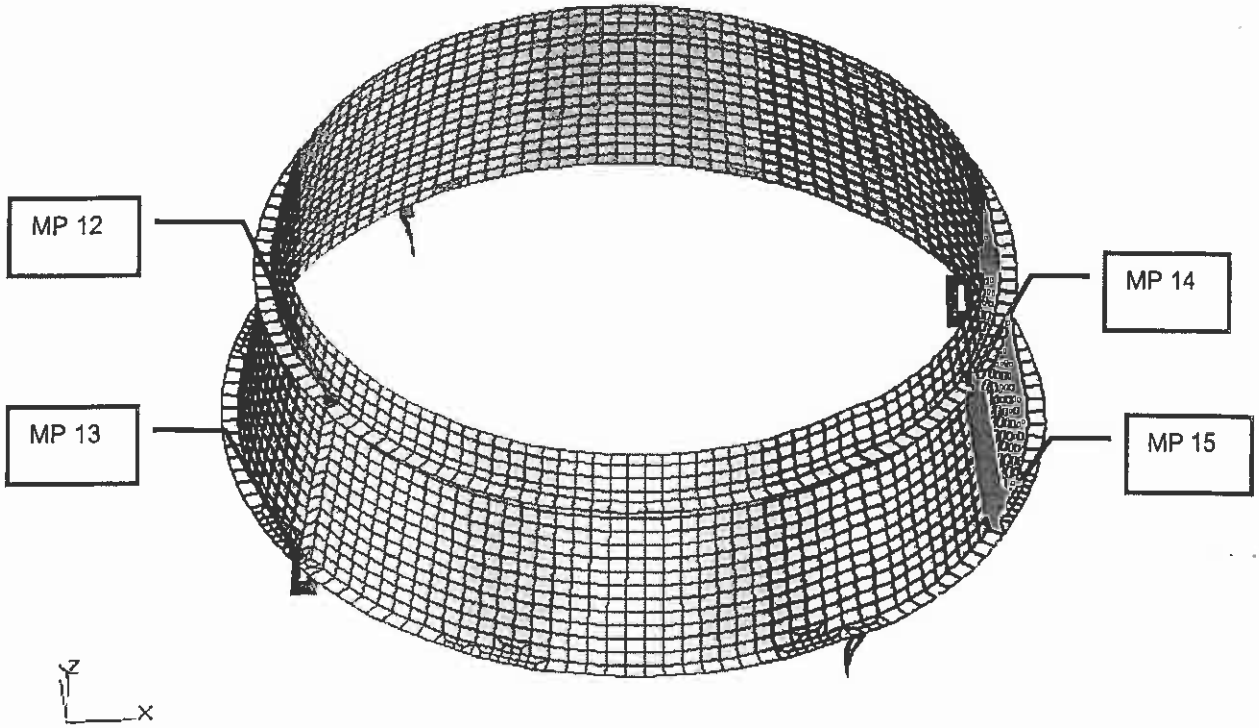

Figure 18-4 Reflector accelerometer position

Questo documento contiene informazioni di proprietà di CARLO GAVAZZI SPACE SpA. Tutti i diritti sono riservati.
All information contained in this document are property of CARLO GAVAZZI SPACE SpA. All right reserved.

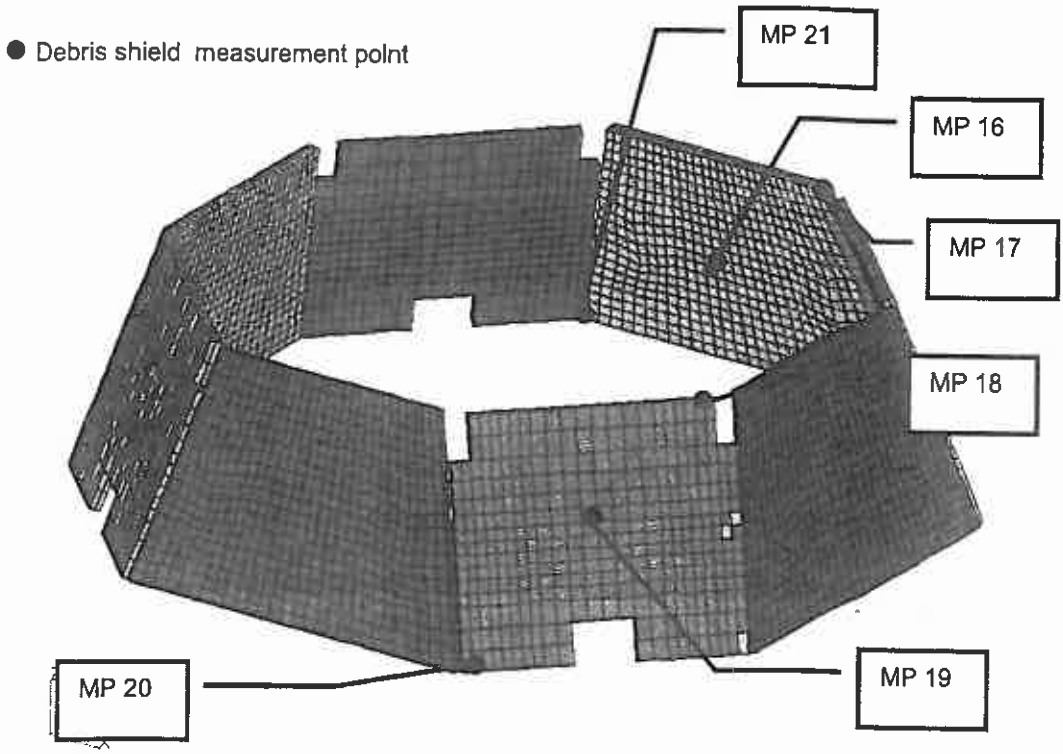

Figure 18-5 Debris shield accelerometer suggested position

Questo documento contiene informazioni di proprietà di CARLO GAVAZZI SPACE SpA. Tutti i diritti sono riservati.
All information contained in this document are property of CARLO GAVAZZI SPACE SpA. All right reserved.

19.RICH FM FLOWCHART:

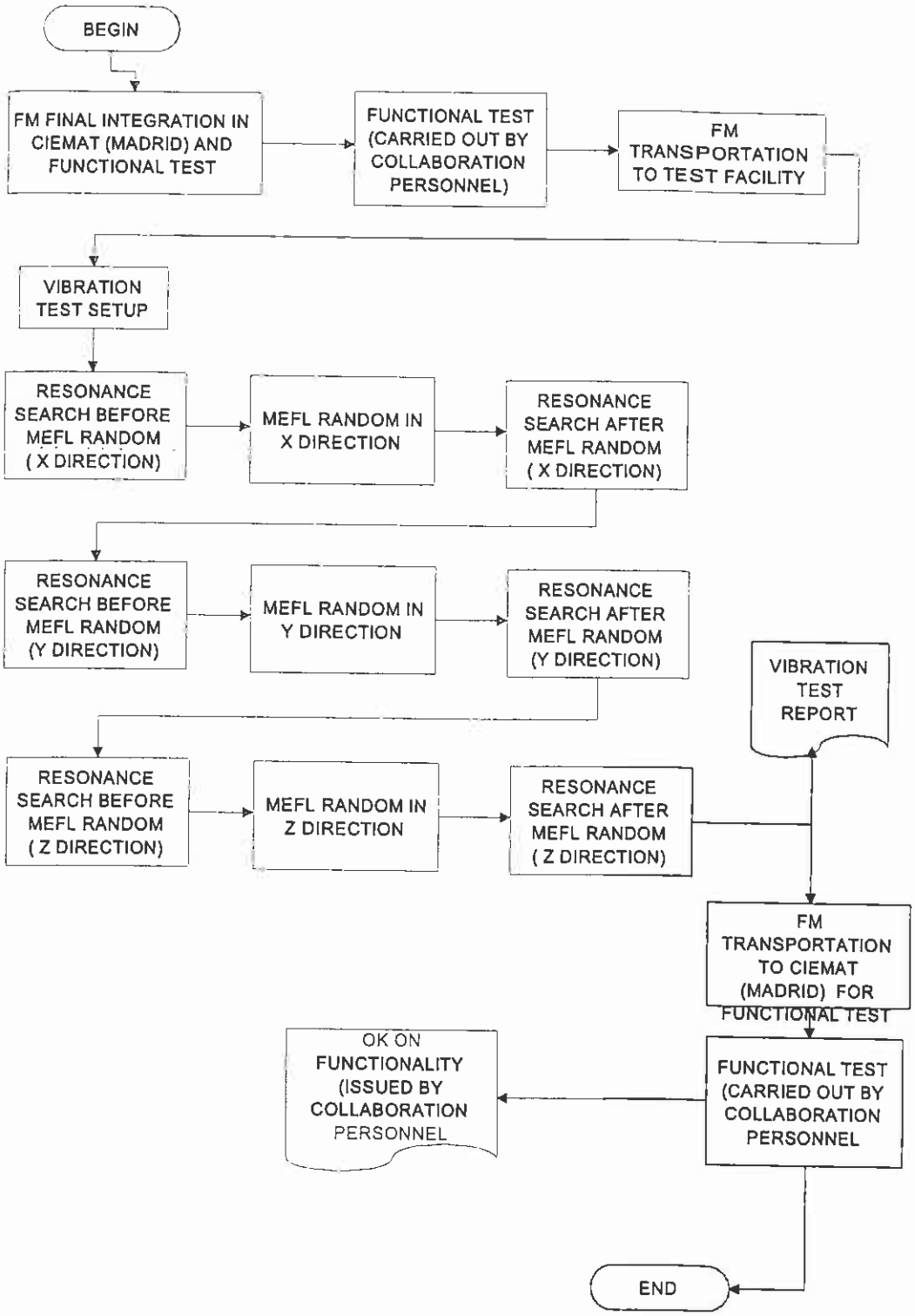

Questo documento contiene informazioni di proprietà di CARLO GAVAZZI SPACE SpA. Tutti i diritti sono riservati.
All information contained in this document are property of CARLO GAVAZZI SPACE SpA. All right reserved.

20.NOTCHING

The notching criteria are based on:

- PMT acceptable acceleration;
- Structural failure preservation.

The PMT acceleration levels are monitored using the acceleration measured on the lower skins.
For what concerns the structural preservation, the RICH SYSTEM structure has been divided in two categories:

1. Primary structure:
   - External structure;
   - Internal structure;
   - Interface Bolts.

2. Secondary structure:
   - Debris shield;
   - Debris stirrup;
   - Debris upper connection;
   - Reflector;
   - Reflector support.

The primary structure is composed by the elements that guarantees mainly the RICH structural integrity, while the secondary structure assures the RICH functionality. For this reason two different methods have been used for these categories to determine the acceleration limits:

- CoG acceleration limit → Static equivalent method for the primary structure;
- Reflector acceleration limit → RMS analysis for the secondary structure.

20.1 NOTCHING FOR PMT ACCELERATION

Base on the results of the single grid vibration and analytical correlation with the FEM model, a gRMS limit has been defined for the lower skins measurement points.
This limit shall be used in place of the 6.8 gRMS limit for the PMT bodies that cannot be measured directly to ensure that the PMTs do not exceed the vibration environment sustained during the single grid vibration.

Direction	Acceleration Limit on lower skin
X	6.18 gRMS
Y	6.18 gRMS
Z	11.3 gRMS

Table 20-1 Acceleration limit for the lower skin measurement points

During low level run the predicted levels shall be checked and extrapolated to full level. Notching shall be proposed in case the gRMS level measure on the grids shall exceed the calculated limits (MP1-6).

Questo documento contiene informazioni di proprietà di CARLO GAVAZZI SPACE SpA. Tutti i diritti sono riservati.
All information contained in this document are property of CARLO GAVAZZI SPACE SpA. All right reserved.

20.2 NOTCHING FOR COG ACCELERATION

The analytical test predictions provided also the following limits for the measured accelerations at CoG:

Direction	Acceleration Limit to RICH CoG
X	7.3 gRMS
Y	7.5 gRMS
Z	9.4 gRMS

Table 20-2 CoG acceleration limit

Using the external structure measurement points the RICH system centre of gravity behavior shall be identified and the gRMS level can be evaluated.
The following figures show the MP behaviour regarding to the CoG response. The used inputs are reported in the paragraph 17.1 , while the considered MPs are different for each direction, in particular:

- X-Input: MP7 X output
- Y-Input: MP9 Y output
- Z-Input: MP8 Z output

The following table shows the scale factor to correlate the MP gRMS outputs and the CoG responses.

Measurement Points	**Acceleration Limit to RICH CoG (1sigma)**	**Scale Factors**	**Acceleration Limit to RICH MP (1sigma)**
MP7 X-X	7.3 gRMS	1.71	4.27 gRMS
MP9 Y-Y	7.5 gRMS	1.64	4.57 gRMS
MP8 Z-Z	9.4 Grms	0.7	13.43 gRMS

Table 20-3 Scale factors to determine the CoG acceleration levels.

During low level run the predicted levels shall be checked and extrapolated to full level. Notching shall be proposed in case the scaled gRMS level, according to the reported response shape, measured on the MP shall exceed the Table 20-2 limits.

Questo documento contiene informazioni di proprietà di CARLO GAVAZZI SPACE SpA. Tutti i diritti sono riservati.
All information contained in this document are property of CARLO GAVAZZI SPACE SpA. All right reserved.

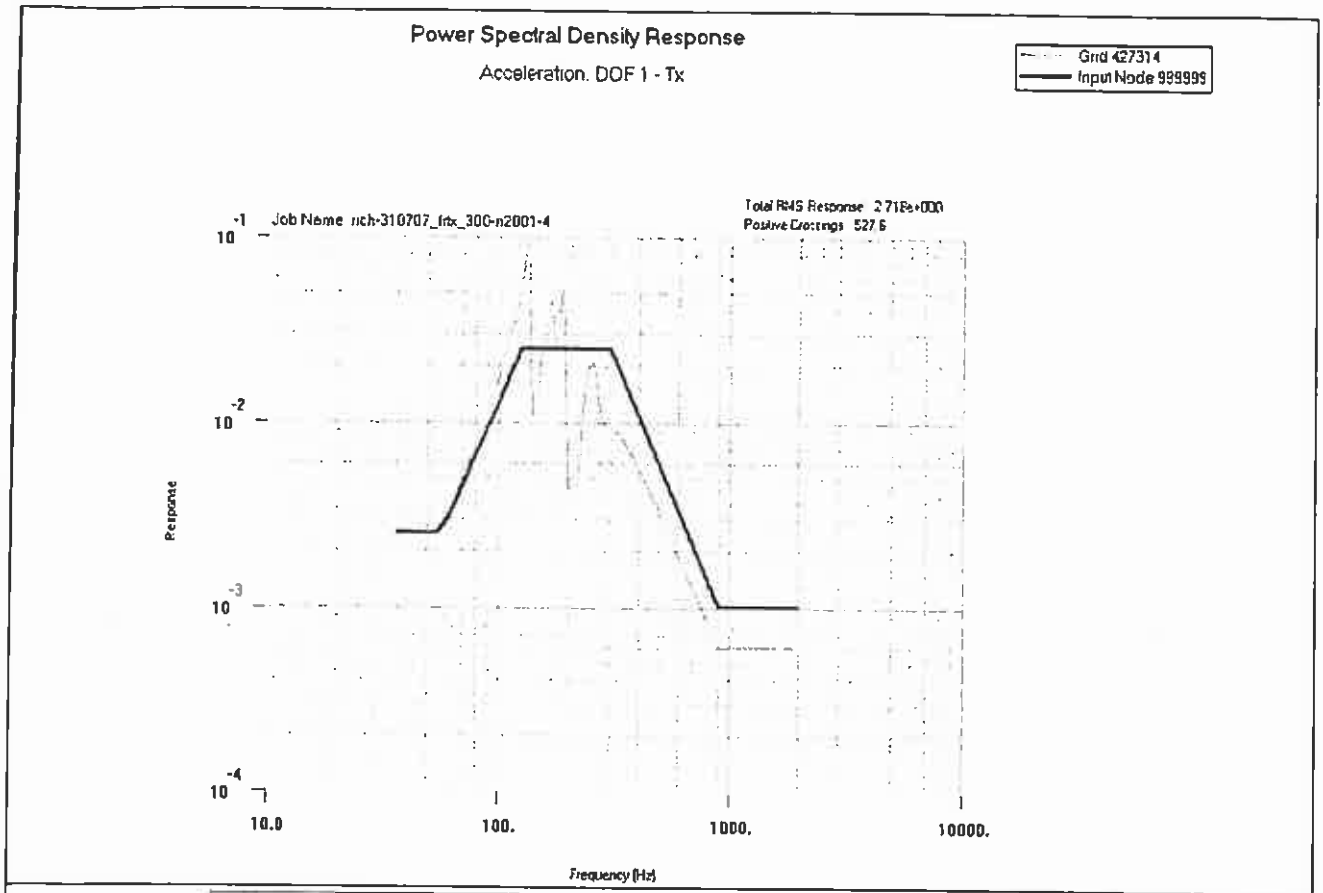

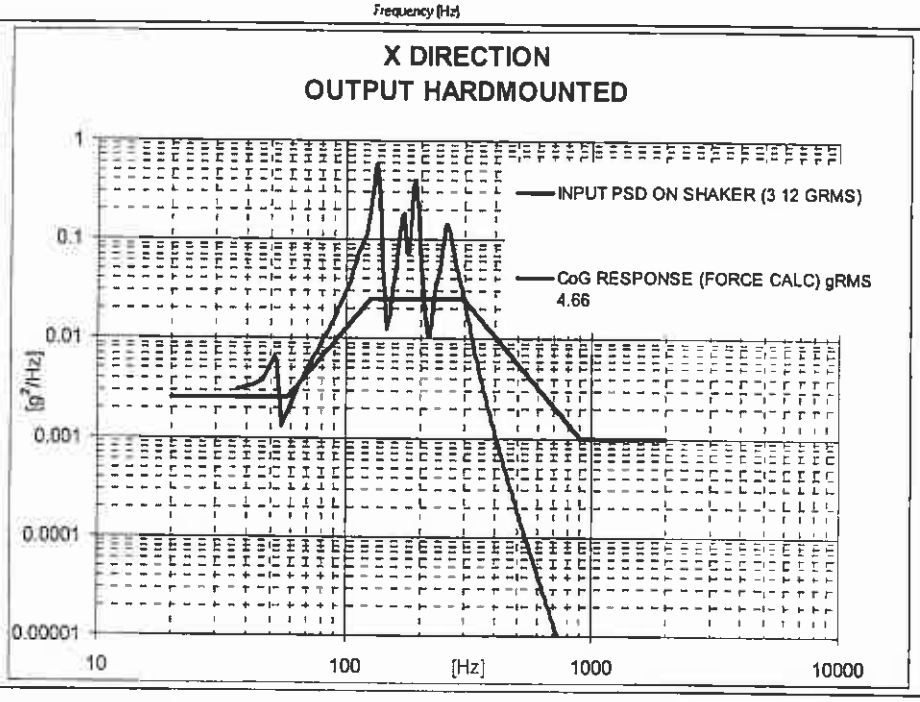

Figure 20-1 X-Input: MP7 output Vs CoG response

Questo documento contiene informazioni di proprietà di CARLO GAVAZZI SPACE SpA. Tutti i diritti sono riservati.
All information contained in this document are property of CARLO GAVAZZI SPACE SpA. All right reserved.

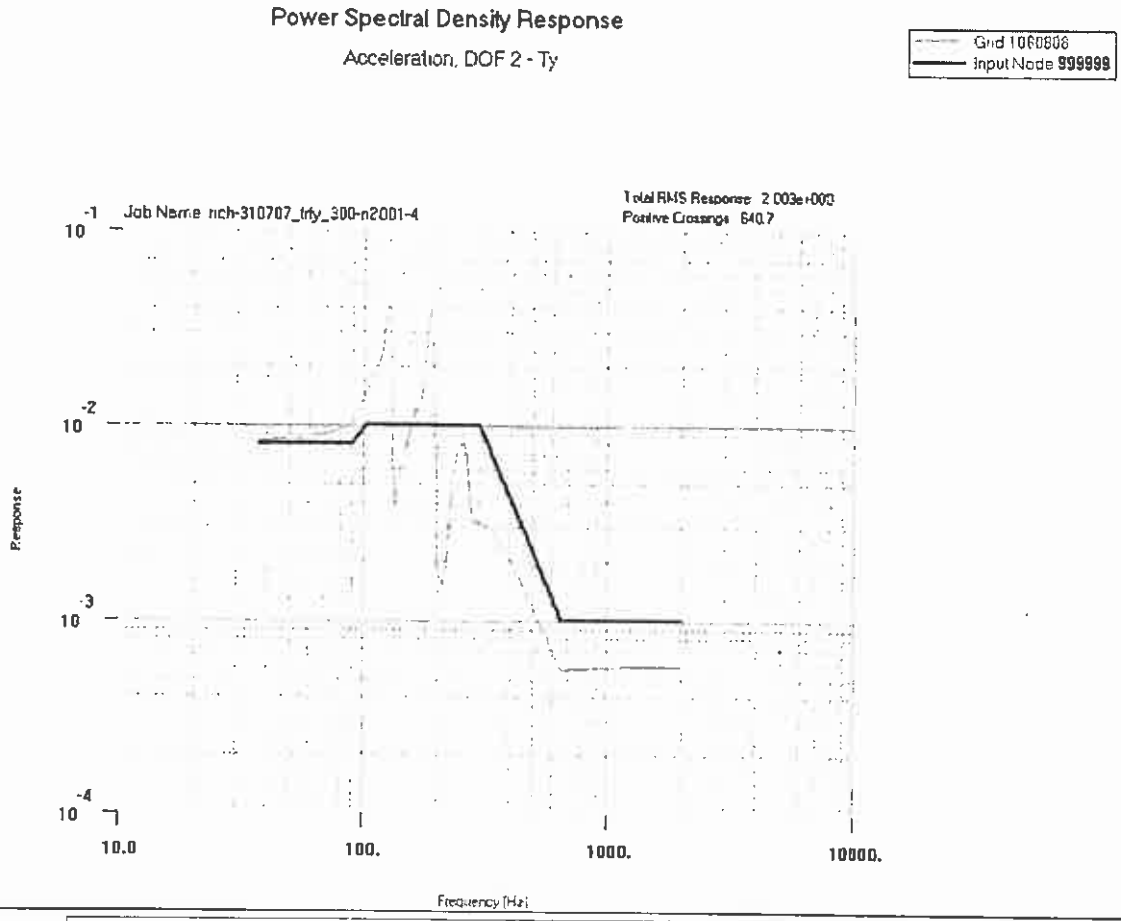

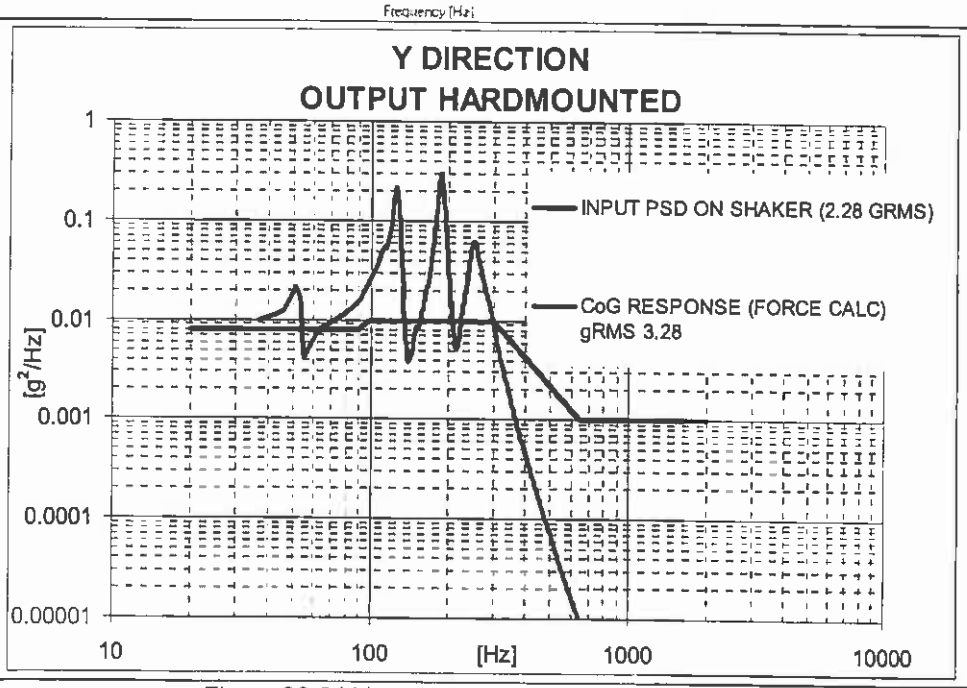

Figure 20-2 Y-Input: MP9 output Vs CoG response

Questo documento contiene informazioni di proprietà di CARLO GAVAZZI SPACE SpA. Tutti i diritti sono riservati.
All information contained in this document are property of CARLO GAVAZZI SPACE SpA. All right reserved.

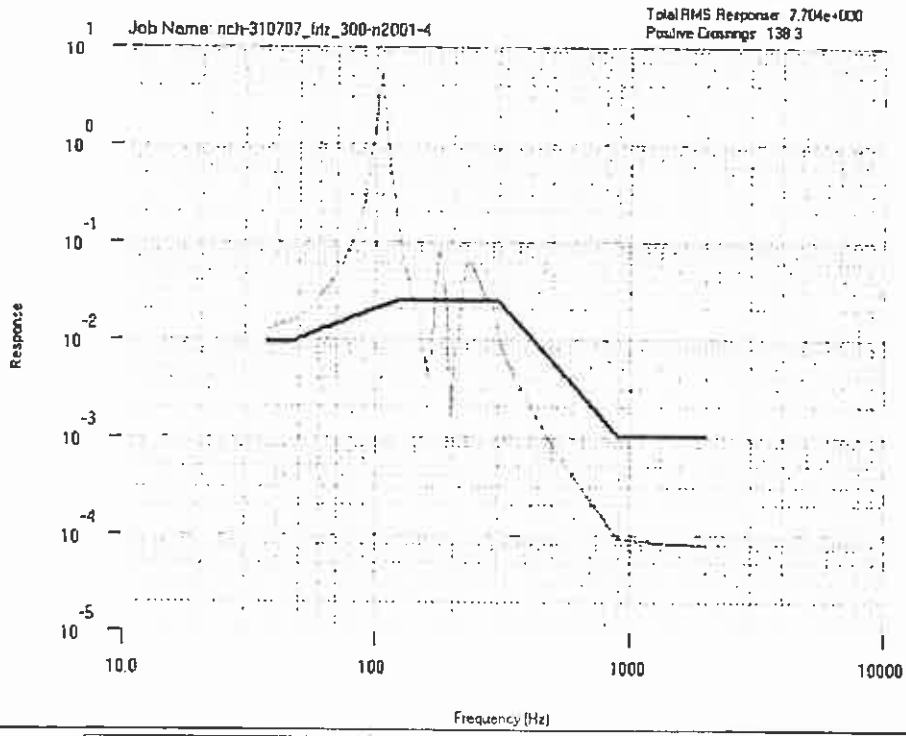

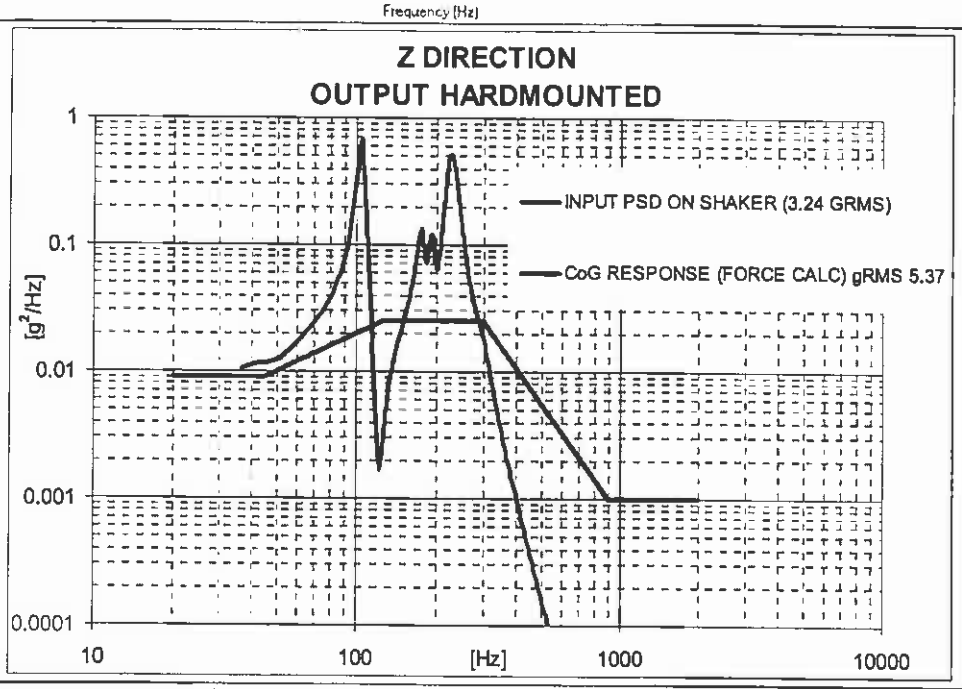

Figure 20-3 Z-Input: MP8 output Vs CoG response

Questo documento contiene informazioni di proprietà di CARLO GAVAZZI SPACE SpA. Tutti i diritti sono riservati.
All information contained in this document are property of CARLO GAVAZZI SPACE SpA. All right reserved.

20.3 NOTCHING FOR REFLECTOR ACCELERATION

The analytical test predictions provided also the limits for the measured accelerations on the reflector:

	Directions	Acceleration Limit on reflector top [gRMS]
X INPUT	X	4.74
	Y	4.38
	Z	1.44
Y INPUT	X	1.04
	Y	4.31
	Z	2.31
Z INPUT	X	2.84
	Y	7.21
	Z	17.21

Table 20-4 Reflector acceleration limit

Using the reflector measurement points the reflector support structural integrity shall be monitored. In particular the MP 12 has not to exceed the Table 20-4 limits.
The following figures show the acceleration response for MP 12, for each excitation direction:

Questo documento contiene informazioni di proprietà di CARLO GAVAZZI SPACE SpA. Tutti i diritti sono riservati.
All information contained in this document are property of CARLO GAVAZZI SPACE SpA. All right reserved.

X-Input

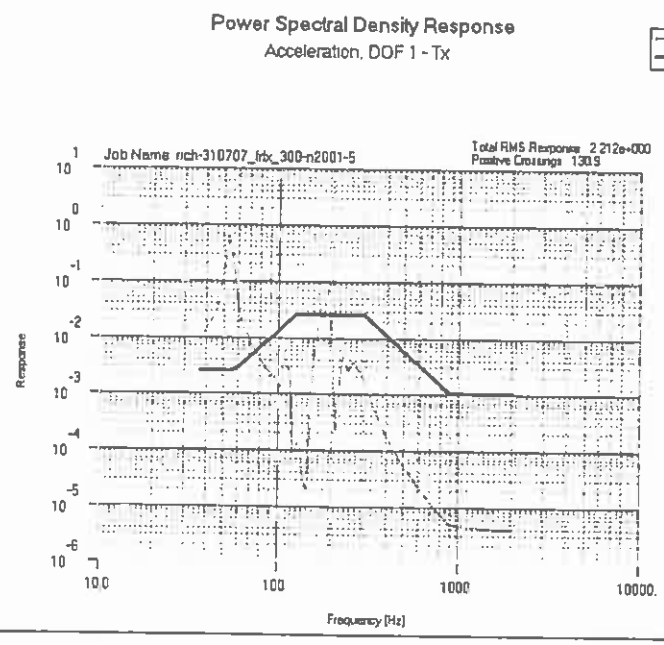

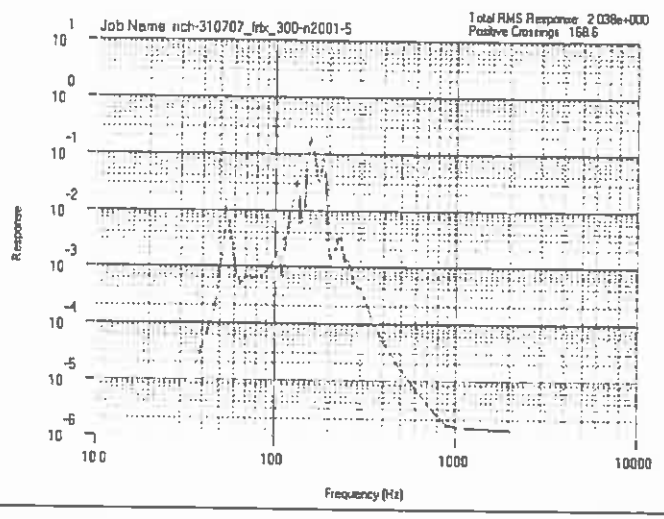

Questo documento contiene informazioni di proprietà di CARLO GAVAZZI SPACE SpA. Tutti i diritti sono riservati.
All information contained in this document are property of CARLO GAVAZZI SPACE SpA. All right reserved.

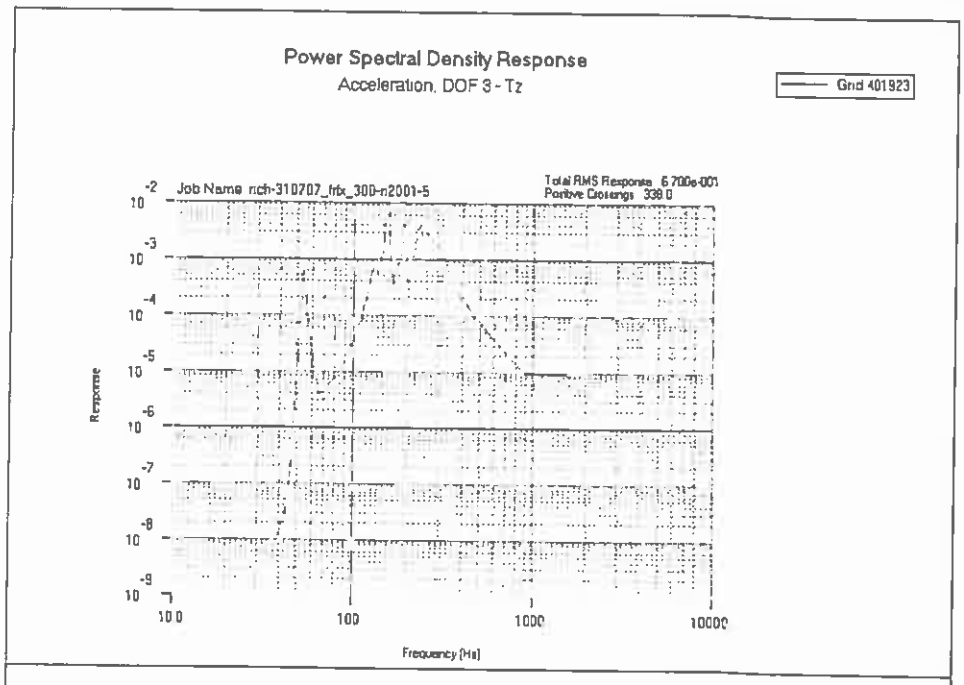

Figure 20-4 X-Input MP12 XYZ outputs

Y-Input

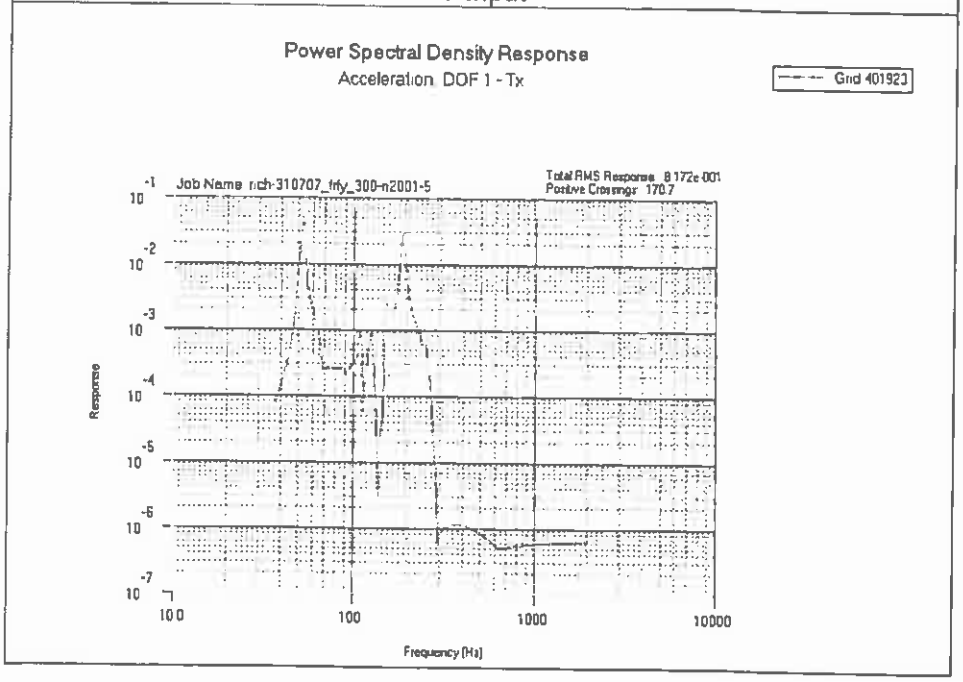

Questo documento contiene informazioni di proprietà di CARLO GAVAZZI SPACE SpA. Tutti i diritti sono riservati.
All information contained in this document are property of CARLO GAVAZZI SPACE SpA. All right reserved.

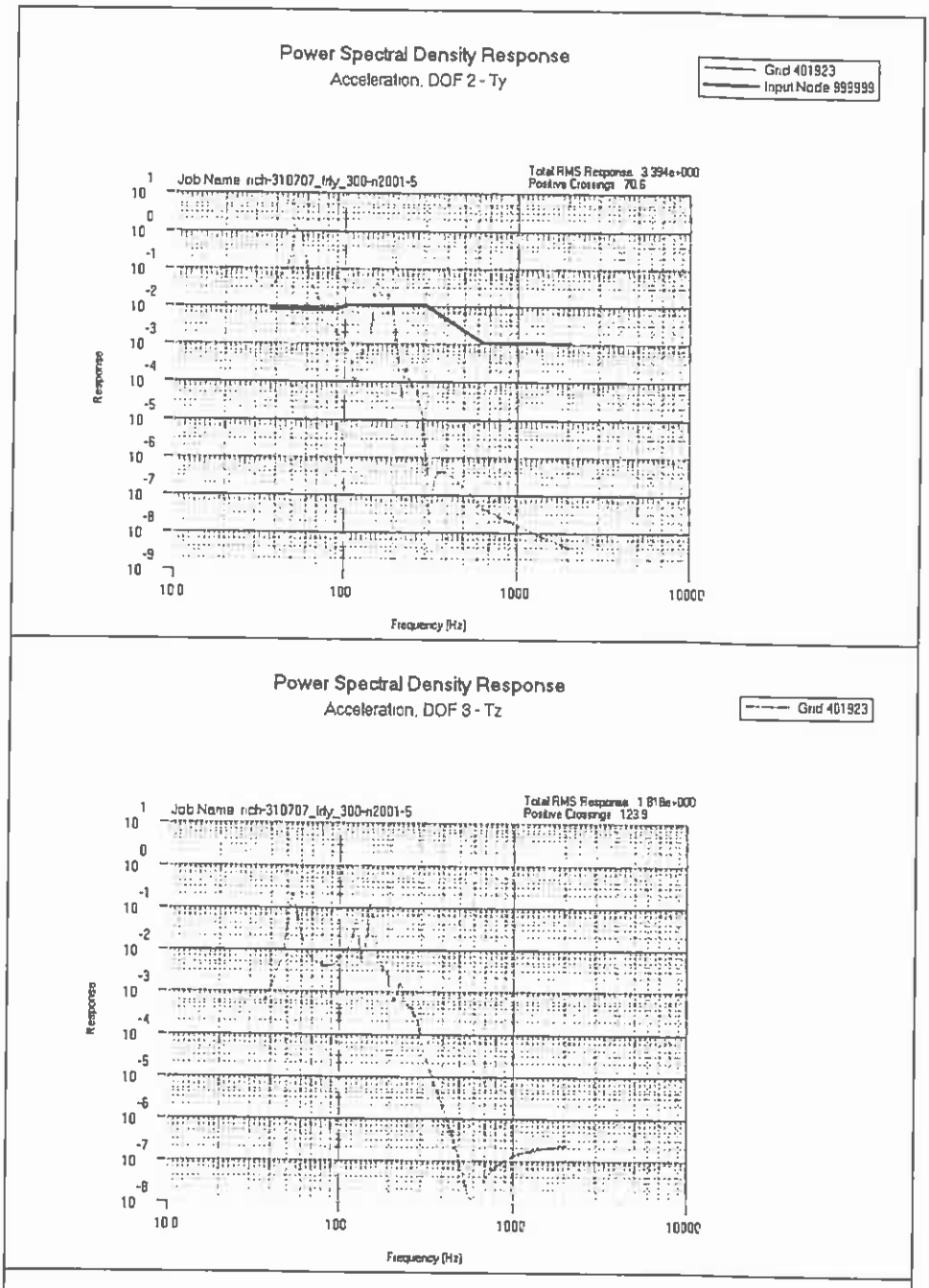

Figure 20-5 Y-Input MP12 XYZ outputs

Questo documento contiene informazioni di proprietà di CARLO GAVAZZI SPACE SpA. Tutti i diritti sono riservati.
All information contained in this document are property of CARLO GAVAZZI SPACE SpA. All right reserved.

Z-Input

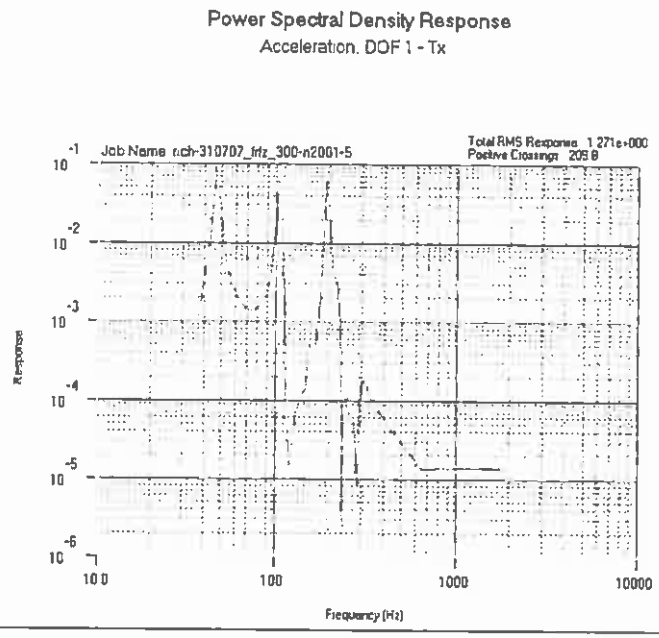

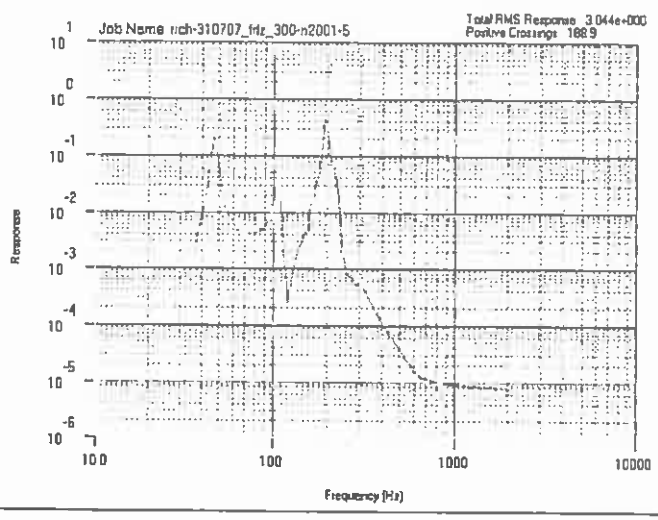

Questo documento contiene informazioni di proprietà di CARLO GAVAZZI SPACE SpA. Tutti i diritti sono riservati.
All information contained in this document are property of CARLO GAVAZZI SPACE SpA. All right reserved.

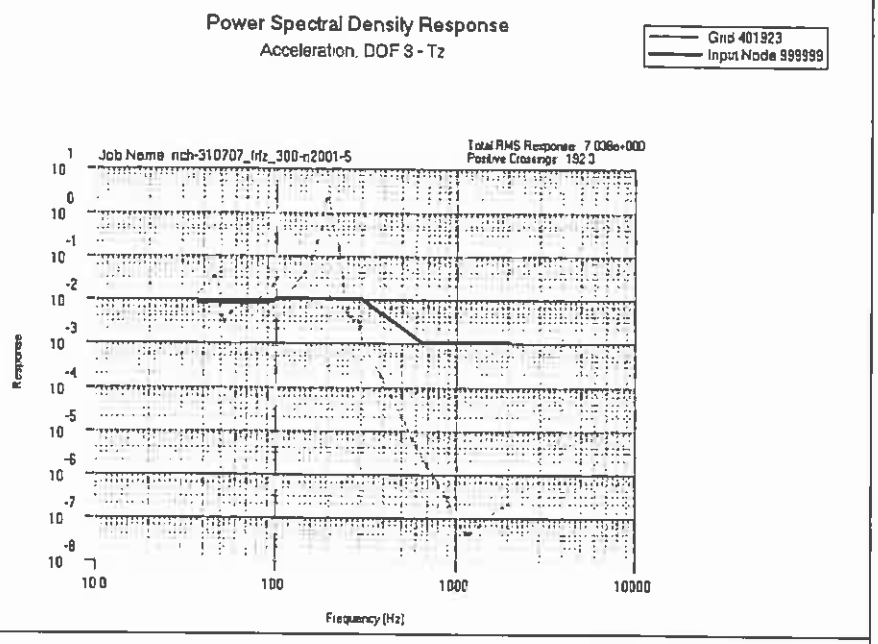

Figure 20-6 Y-Input MP12 XYZ outputs

During low level run the predicted levels shall be checked and extrapolated to full level. Notching shall be proposed in case the gRMS level, according to the reported response shape, measured on the reflector measurement point shall exceed the calculated limits.

Questo documento contiene informazioni di proprietà di CARLO GAVAZZI SPACE SpA. Tutti i diritti sono riservati.
All information contained in this document are property of CARLO GAVAZZI SPACE SpA. All right reserved.

21.VIBRATION TEST PROCEDURE (STEP BY STEP)

This paragraph explains all the procedures that shall be performed on the models.
Each test activity is defined in sequence and task by task, including measurement recording to be made.

In the sequence procedure is also contained the statement that the test article shall be tested in accordance with the approved procedure to be signed and dated by Test Conductor, Quality Assurance Representative and Customer Representative (where applicable).

Questo documento contiene informazioni di proprietà di CARLO GAVAZZI SPACE SpA. Tutti i diritti sono riservati.
All information contained in this document are property of CARLO GAVAZZI SPACE SpA. All right reserved.

UUT DATA :	Model	Item	C.I.	S/N

STEP n°	TEST SEQUENCE	EXPECTED VALUE	MEASURED VALUE	REMARKS
1.	**FUNCTIONAL TEST REPORT CHECK**			
1.1.	CHECK THE PRESENCE, IN THE DETECTOR DELIVERY DATA PACKAGE, OF THE FUNCTIONAL TEST REPORT (PERFORMED BY COLLABORATION PERSONNEL) STATING THAT THE HARDWARE IS READY FOR THE VIBRATION TEST	YES		
–				
2.	**UUT QUALIFICATION VIBRATION TEST IN X DIRECTION**			
2.1.	**RESONANCE SEARCH BEFORE RANDOM**			
2.1.1.	SCREW THE FIXTURE TO THE SLIDING TABLE FOR VIBRATION IN X DIRECTION	OK		
2.1.2.	INSTALL UUT ON FIXTURE FOR X DIRECTION VIBRATION (NAS 1351-5 screw torque 35 Nm and DIN 912 M10 torque TBD NM)	OK		
2.1.3.	FIX CONTROL ACCELEROMETERS (CP) TO THE FIXTURE	OK		
2.1.4.	FIX ACCELEROMETERS TO UUT	OK		
2.1.5.	PERFORM A RESONANCE SEARCH (PROGRAM SHAKER ACCORDING TO 17.2.1) IF MULTIPOINT INPUT CONTROL IS USED SELECT HIGHEST POINT STRATEGY	OK		
2.1.6.	ANNEX TO THE TEST REPORT THE RECORDING CHART AND SAVE FILE	OK		
2.1.7.	VERIFY FIXTURE TRASMISSIBILITY	OK		
2.1.8.	VERIFY PREDICTED FIRST FREQUENCY AND RESPONSE	OK		

DATE:	TEST CONDUCTOR	QA	CUSTOMER

Questo documento contiene informazioni di proprietà di CARLO GAVAZZI SPACE SpA. Tutti i diritti sono riservati.
All information contained in this document are property of CARLO GAVAZZI SPACE SpA. All right reserved.

UUT DATA :	Model	Item	C.I.	S/N

STEP n°	TEST SEQUENCE	EXPECTED VALUE	MEASURED VALUE	REMARKS

DATE:	TEST CONDUCTOR	QA	CUSTOMER

Questo documento contiene informazioni di proprietà di CARLO GAVAZZI SPACE SpA. Tutti i diritti sono riservati.
All information contained in this document are property of CARLO GAVAZZI SPACE SpA. All right reserved.

UUT DATA :	Model	Item	C.I.	S/N

STEP n°	TEST SEQUENCE	EXPECTED VALUE	MEASURED VALUE	REMARKS
2.2.	**RANDOM VIBRATION IN X DIRECTION**			
2.2.1.	PROGRAM SHAKER ACCORDING TO Table 17-1 IF MULTIPOINT INPUT CONTROL IS USED SELECT MAXIMUM POINT STRATEGY	OK		
2.2.2.	PERFORM THE RANDOM VIBRATION TEST AT LOW LEVEL (-3dB)	OK		
2.2.3.	VISUAL INSPECTION OF THE TEST ARTICLE	No visual damages detected		
2.2.4.	VERIFY UUT RESPONSE AND NOTCHING IF REQUIRED	Freq. OK gRMS OK		
2.2.5.	PERFORM THE RANDOM VIBRATION TEST AT FULL LEVEL (-0dB)	OK		
2.2.6.	VISUAL INSPECTION OF THE TEST ARTICLE	No visual damages detected		
2.2.7.	ANNEX TO THE TEST REPORT THE RECORDING CHART AND SAVE FILE	OK		

DATE:	TEST CONDUCTOR	QA	CUSTOMER

Questo documento contiene informazioni di proprietà di CARLO GAVAZZI SPACE SpA. Tutti i diritti sono riservati.
All information contained in this document are property of CARLO GAVAZZI SPACE SpA. All right reserved.

UUT DATA :	Model	Item	C.I.	S/N

STEP n°	TEST SEQUENCE	EXPECTED VALUE	MEASURED VALUE	REMARKS
2.3.	**RESONANCE SEARCH AFTER RANDOM VIBRATION**			
2.3.1.	PERFORM A RESONANCE SEARCH AFTER RANDOM	OK		
2.3.2.	ANNEX TO THE TEST REPORT THE RECORDING CHART AND SAVE FILE	OK		
2.3.3.	VERIFY DISCREPANCIES WITH RESPECT TO PREVIOUS RESONANCE SEARCH	OK		
2.3.4.	REMOVE UUT MOUNTED ACCELEROMETERS IF REQUIRED	OK		
2.3.5.	CHECK FIXTURE BOLTS TORQUE	OK		
2.3.6.	REMOVE UUT FROM FIXTURE	OK		
2.3.7.	REMOVE FIXTURE	OK		

DATE:	TEST CONDUCTOR	QA	CUSTOMER

Questo documento contiene informazioni di proprietà di CARLO GAVAZZI SPACE SpA. Tutti i diritti sono riservati.
All information contained in this document are property of CARLO GAVAZZI SPACE SpA. All right reserved.

UUT DATA :	Model	Item	C.I.	S/N

STEP n°	TEST SEQUENCE	EXPECTED VALUE	MEASURED VALUE	REMARKS
3.	**UUT QUALIFICATION VIBRATION TEST IN Y DIRECTION**			
3.1.	**RESONANCE SEARCH BEFORE MEFL RANDOM**			
3.1.1.	SCREW THE FIXTURE TO THE SLIDING TABLE FOR VIBRATION IN Y DIRECTION	OK		
3.1.2.	INSTALL UUT ON FIXTURE FOR Y DIRECTION VIBRATION (NAS 1351-5 screw torque 35 Nm and DIN 912 M10 torque TBD NM))	OK		
3.1.3.	FIX CONTROL ACCELEROMETERS (CP) TO THE FIXTURE	OK		
3.1.4.	FIX ACCELEROMETERS TO UUT	OK		
3.1.5.	PERFORM A RESONANCE SEARCH (PROGRAM SHAKER ACCORDING TO 17.2.1) IF MULTIPOINT INPUT CONTROL IS USED SELECT HIGHEST POINT STRATEGY	OK		
3.1.6.	ANNEX TO THE TEST REPORT THE RECORDING CHART AND SAVE FILE	OK		
3.1.7.	VERIFY FIXTURE TRASMISSIBILITY	OK		
3.1.8.	VERIFY PREDICTED FIRST FREQUENCY AND RESPONSE	OK		

DATE:	TEST CONDUCTOR	QA	CUSTOMER

Questo documento contiene informazioni di proprietà di CARLO GAVAZZI SPACE SpA. Tutti i diritti sono riservati.
All information contained in this document are property of CARLO GAVAZZI SPACE SpA. All right reserved.

UUT DATA :	Model	Item	C.I.	S/N

STEP n°	TEST SEQUENCE	EXPECTED VALUE	MEASURED VALUE	REMARKS
3.2.	**MEFL RANDOM VIBRATION IN Y DIRECTION**			
3.2.1.	PROGRAM SHAKER ACCORDING TO Table 17-2 IF MULTIPOINT INPUT CONTROL IS USED SELECT MAXIMUM POINT STRATEGY	OK		
3.2.2.	PERFORM THE RANDOM VIBRATION TEST AT LOW LEVEL (-3dB)	OK		
3.2.3.	VISUAL INSPECTION OF THE TEST ARTICLE	No visual damages detected		
3.2.4.	VERIFY UUT RESPONSE AND NOTCHING IF REQUIRED	OK		
3.2.5.	PERFORM THE RANDOM VIBRATION TEST AT FULL LEVEL (-0dB)	OK		
3.2.6.	VISUAL INSPECTION OF THE TEST ARTICLE	No visual damages detected		
3.2.7.	ANNEX TO THE TEST REPORT THE RECORDING CHART AND SAVE FILE	OK		

DATE:	TEST CONDUCTOR	QA	CUSTOMER

Questo documento contiene informazioni di proprietà di CARLO GAVAZZI SPACE SpA. Tutti i diritti sono riservati.
All information contained in this document are property of CARLO GAVAZZI SPACE SpA. All right reserved.

UUT DATA :	Model	Item	C.I.	S/N

STEP n°	TEST SEQUENCE	EXPECTED VALUE	MEASURED VALUE	REMARKS
3.3.	**RESONANCE SEARCH AFTER MEFL RANDOM VIBRATION**			
3.3.1.	PERFORM A RESONANCE SEARCH AFTER RANDOM (PROGRAM SHAKER ACCORDING TO 17.2.1)	OK		
3.3.2.	ANNEX TO THE TEST REPORT THE RECORDING CHART AND SAVE FILE	OK		
3.3.3.	VERIFY DISCREPANCIES WITH RESPECT TO PREVIOUS RESONANCE SEARCH	OK		
3.3.4.	REMOVE UUT MOUNTED ACCELEROMETERS	OK		
3.3.5.	CHECK FIXTURE BOLTS TORQUE	OK		
3.3.6.	REMOVE UUT FROM FIXTURE	OK		
3.3.7.	REMOVE FIXTURE	OK		

DATE:	TEST CONDUCTOR	QA	CUSTOMER

Questo documento contiene informazioni di proprietà di CARLO GAVAZZI SPACE SpA. Tutti i diritti sono riservati.
All information contained in this document are property of CARLO GAVAZZI SPACE SpA. All right reserved.

UUT DATA :	Model	Item	C.I.	S/N

STEP n°	TEST SEQUENCE	EXPECTED VALUE	MEASURED VALUE	REMARKS
4.	**UUT QUALIFICATION VIBRATION TEST IN Z DIRECTION**			
4.1.	**RESONANCE SEARCH BEFORE MEFL RANDOM**			
4.1.1.	SCREW THE FIXTURE TO THE SLIDING TABLE FOR VIBRATION IN Z DIRECTION	OK		
4.1.2.	INSTALL UUT ON FIXTURE FOR Z DIRECTION VIBRATION (NAS 1351-5 screw torque 35 Nm and DIN 912 M10 torque TBD NM)	OK		
4.1.3.	FIX CONTROL ACCELEROMETERS (CP) TO THE FIXTURE	OK		
4.1.4.	FIX ACCELEROMETERS TO UUT	OK		
4.1.5.	PERFORM A RESONANCE SEARCH (PROGRAM SHAKER ACCORDING TO 17.2.1) IF MULTIPOINT INPUT CONTROL IS USED SELECT HIGHEST POINT STRATEGY			
4.1.6.	ANNEX TO THE TEST REPORT THE RECORDING CHART AND SAVE FILE	OK		
4.1.7.	VERIFY FIXTURE TRASMISSIBILITY	OK		
4.1.8.	VERIFY PREDICTED FIRST FREQUENCY AND RESPONSE	OK		

DATE:	TEST CONDUCTOR	QA	CUSTOMER

Questo documento contiene informazioni di proprietà di CARLO GAVAZZI SPACE SpA. Tutti i diritti sono riservati.
All information contained in this document are property of CARLO GAVAZZI SPACE SpA. All right reserved.

UUT DATA :	Model	Item	C.I.	S/N

STEP n°	TEST SEQUENCE	EXPECTED VALUE	MEASURED VALUE	REMARKS
4.2.	**MEFL RANDOM VIBRATION IN Z DIRECTION**			
4.2.1.	PROGRAM SHAKER ACCORDING TO Table 17-3 IF MULTIPOINT INPUT CONTROL IS USED SELECT MAXIMUM POINT STRATEGY	OK		
4.2.2.	PERFORM THE RANDOM VIBRATION TEST AT LOW LEVEL (-3dB)	OK		
4.2.3.	VISUAL INSPECTION OF THE TEST ARTICLE	No visual damages detected		
4.2.4.	VERIFY UUT RESPONSE AND NOTCHING IF REQUIRED	OK		
4.2.5.	PERFORM THE RANDOM VIBRATION TEST AT FULL LEVEL (-0dB)	OK		
4.2.6.	VISUAL INSPECTION OF THE TEST ARTICLE	No visual damages detected		
4.2.7.	ANNEX TO THE TEST REPORT THE RECORDING CHART AND SAVE FILE	OK		

DATE:	TEST CONDUCTOR	QA	CUSTOMER

Questo documento contiene informazioni di proprietà di CARLO GAVAZZI SPACE SpA. Tutti i diritti sono riservati.
All information contained in this document are property of CARLO GAVAZZI SPACE SpA. All right reserved.

UUT DATA :	Model	Item	C.I.	S/N

STEP n°	TEST SEQUENCE	EXPECTED VALUE	MEASURED VALUE	REMARKS
4.3.	**RESONANCE SEARCH AFTER MEFL RANDOM VIBRATION**			
4.3.1.	PERFORM A RESONANCE SEARCH AFTER RANDOM (PROGRAM SHAKER ACCORDING TO 17.2.1)	OK		
4.3.2.	ANNEX TO THE TEST REPORT THE RECORDING CHART AND SAVE FILE	OK		
4.3.3.	VERIFY DISCREPANCIES WITH RESPECT TO PREVIOUS RESONANCE SEARCH	OK		
4.3.4.	REMOVE UUT MOUNTED ACCELEROMETERS	OK		
4.3.5.	CHECK FIXTURE BOLTS TORQUE	OK		
4.3.6.	REMOVE UUT FROM FIXTURE	OK		
4.3.7.	REMOVE FIXTURE	OK		
4.3.8.	CHECK RICH IVF BOLTS TORQUE AFTER MIRROR DE-INTEGRATION	OK		
5.	FINAL FUNCTIONAL TEST REPORT CHECK			
5.1.	CHECK THE FINAL FUNCTIONAL TEST REPORT (PERFORMED BY COLLABORATION PERSONNEL) STATING THE STATUS OF THE PMTS AFTER THE VIBRATION TEST	OK		

DATE:	TEST CONDUCTOR	QA	CUSTOMER

Questo documento contiene informazioni di proprietà di CARLO GAVAZZI SPACE SpA. Tutti i diritti sono riservati.
All information contained in this document are property of CARLO GAVAZZI SPACE SpA. All right reserved.