COVER SHEET

DRD: N.A.

ACCEPTANCE DATA PACKAGE

ECAL THERMAL CONTROL SYSTEM ASSY

This is a controlled document. Changes and revisions will be issued, as they are approved, to holders of this document.

ITEM DESCRIPTION: ECAL TCS ASSY

PART N°/C.I. N°: ECAL-TCS FM01

SERIAL N°: 01

MODEL: FM

SPECIFICATION N°: Allegato tecnico - manageriale al contratto I/ 020/ 03/ 0

CUSTOMER: ASI

CONTRACTOR: Carlo Gavazzi Space S.p.A.

CONTRACT N°: ASI/ CGSI/ 020/ 03/ 0

	NAME	DATE	SIGNATURE
PREPARED BY:	P.A. Team		
PA APPROVAL:	L. CREMONESI	19.12.08	L. Cremonesi
PM APPROVAL:	M. OLIVIER	19.12.08	M. Olivier
CC APPROVAL:	C. CINQUEPALMI	19.12.08	C. Cinquepalmi
CUSTOMER APPROVAL:			

All information contained in this document are property of CARLO GAVAZZI SPACE SpA. All rights reserved.

CHANGE RECORD OF THE ADP

ISSUE	DATE	CHANGE AUTHORITY	SECTIONS/PAGES AFFECTED	REMARKS
1	May 2007		All	
2	June 2008		Sec. 1 COVER SHEET Sec. 2 CHANGE RECORD OF THE ADP Sec.3 LIST of DELIVERABLE ITEMS Sec. 4 CERTIFICATES Sec. 5 CIDL / AS BUILT CONFIGURATION LIST Sec. 6 NOTES and COMMENTS Sec. 32 MINUTES OF MEETING Sec 37 OTHER DOCUMENTS	
3	Dec. 2008		Sec. 1 COVER SHEET Sec. 2 CHANGE RECORD OF THE ADP Sec.3 LIST of DELIVERABLE ITEMS Sec. 4 CERTIFICATES Sec. 5 CIDL / AS BUILT CONFIGURATION LIST Sec. 6 NOTES and COMMENTS Sec 37 OTHER DOCUMENTS	

All information contained in this document are property of CARLO GAVAZZI SPACE SpA. All rights reserved.

DISTRIBUTION LIST OF THE ADP

INTERNAL DISTRIBUTION:

NAME	DEPT.	N° OF COPIES
M. OLIVIER	DT/ MT	1

EXTERNAL DISTRIBUTION:

NAME	COMPANY	N° OF COPIES
E. RUSSO	ASI	1

All information contained in this document are property of CARLO GAVAZZI SPACE SpA. All rights reserved.

LIST OF DELIVERED ITEMS

CONTRACTOR: CARLO GAVAZZI SPACE S.P.A.	ITEM DESCRIPTION: ECAL TCS ASSY	
MODEL: FM	PART N°/C.I. N°: ECAL-TCS FM01	SERIAL N°: 01

ITEM DESCRIPTION	CONTAINER N°	PART N°/C.I. N°	SERIAL N°	Q.TY
1 THERMOSTAT	N.A.	G311P641/03-701S-01 011/3/3/7	201	1
2 THERMOSTAT	N.A.	G311P641/03-701S-01 011/3/3/7	202	1
3 THERMOSTAT	N.A.	G311P641/03-701S-01 011/3/3/7	203	1
4 THERMOSTAT	N.A.	G311P641/03-701S-01 011/3/3/7	206	1
5 THERMOSTAT	N.A.	G311P641/03-701S-01 011/3/3/7	207	1
6 THERMOSTAT	N.A.	G311P641/03-701S-01 011/3/3/7	208	1
7 THERMOSTAT	N.A.	G311P641/03-701S-01 011/3/3/7	209	1
8 THERMOSTAT	N.A.	G311P641/03-701S-01 011/3/3/7210	210	1
9 THERMOSTAT	N.A.	G311P641/03-701S-01 011/3/3/7	211	1
10 THERMOSTAT	N.A.	G311P641/03-701S-01 011/3/3/7	214	1
11 THERMOSTAT	N.A.	G311P641/03-701S-01 011/3/3/7	215	1
12 THERMOSTAT	N.A.	G311P641/03-701S-01 011/3/3/7	217	1

All information contained in this document are property of CARLO GAVAZZI SPACE SpA. All rights reserved.

CONTRACTOR: CARLO GAVAZZI SPACE S.P.A.	ITEM DESCRIPTION: ECAL TCS ASSY			
MODEL: FM	PART N°/C.I. N°: ECAL-TCS FM01		SERIAL N°: 01	
ITEM DESCRIPTION	CONTAINER N°	PART N°/C.I. N°	SERIAL N°	Q.TY
13 ECAL CORNER ZP MLI:	N.A.	RTEM-DP-0002-AAE	N.A.	
13.1 BLANKET ECAL CORNER ZPXNYN	N.A.	G4070-100-210-00	01	1
13.2 BLANKET ECAL CORNER ZPXNYP	N.A.	G4070-100-220-00	01	1
13.3 BLANKET ECAL CORNER ZPXPYN	N.A.	G4070-100-230-00	01	1
13.4 BLANKET ECAL CORNER ZPXPYP	N.A.	G4070-100-240-00	01	1
14 ECAL CORNER ZN MLI	N.A.	RTEM-DP-0003-AAE	N.A.	
14.1 BLANKET ECAL CORNER ZNXNYN	N:A:	G4070-100-250-00/A	01	1
14.2 BLANKET ECAL CORNER ZNXNYP	N.A:	G4070-100-260-00/A	01	1
14.3 BLANKET ECAL CORNER ZNXPYN	N.A.	G4070-100-270-00/A	01	1
14.4 BLANKET ECAL CORNER ZNXPYP	N.A.	G4070-100-280-00/A	01	1
14.5 BLANKET RICH LATERAL XN	N.A.	G4070-100-120-00/A	01	1
14.6 BLANKET RICH LATERAL XP	N.A.	G4070-100-125-00/A	01	1

All information contained in this document are property of CARLO GAVAZZI SPACE SpA. All rights reserved.

LIST OF DELIVERED ITEMS

CONTRACTOR: CARLO GAVAZZI SPACE S.P.A.	ITEM DESCRIPTION: ECAL TCS ASSY	
MODEL: FM	PART N°/C.I. N°: ECAL-TCS FM01	SERIAL N°: 01

ITEM DESCRIPTION	CONTAINER N°	PART N°/C.I. N°	SERIAL N°	Q.TY
14.7 BLANKET RICH LATERAL YN	N.A.	G4070-100-130-00/A	01	1
14.8 BLANKET RICH LATERAL YP	N.A.	G4070-100-135-00/A	01	1

All information contained in this document are property of CARLO GAVAZZI SPACE SpA. All rights reserved.

SHIPPING DOCUMENTS

LIST OF SHIPPING DOCUMENTS INCLUDED IN THIS SECTION:

DESCRIPTION / DOCUMENT NUMBER	DATE
SHIPPING NOTE N° 231	04/07/2007

All information contained in this document are property of CARLO GAVAZZI SPACE SpA. All rights reserved.

CARLO GAVAZZI SPACE SpA	RICH SYSTEM	Doc.: RICSYS-CC-CGS-005
		Date: 19.12.2008
	COC/COA CERTIFICATE OF CONFORMITY/ACCEPTANCE	Page: 1 of 2

ITEM DESCRIPTION:	PART N°/C.I. N°:	SERIAL N°:	MODEL:
ECAL-TCS ASSY	ECAL-TCS FM01	01	FM
SPECIFICATION N°:	**CUSTOMER:**	**CONTRACTOR:**	**CONTRACT N°:**
Allegato tecnico - manageriale al contratto I/ 020/ 03/ 0 JSC2 9789 Playload Integration Hardware	ASI	Carlo Gavazzi Space S.p.A.	ASI/CGS/020/03/0

THE ENDORSEMENT HEREIN CERTIFY THAT THE ITEM OFFERED FOR ACCEPTANCE HAS BEEN DESIGNED, MANUFACTURED, ASSEMBLED AND TESTED IN ACCORDANCE WITH APPROVED CONFIGURATION AND COMPLIES IN ALL RESPECTS WITH CONTRACT REQUIREMENTS EXCEPT AS RECORDED IN THE LIST OF EXCEPTIONS OF THIS CERTIFICATE.

The following is certified:		Exceptions:
1.	All exceptions listed against lower level item configurations have been resolved and closed out	
2.	A configuration verification has been performed and the item complies with configuration baseline, and it is accurately described by the configuration documents	
3.	Each departure from specification and drawing has been approved	
4.	Verification including acceptance testing has been successfully completed and all discrepancies have been resolved and corrective actions implemented	
5.	The CI complies with the PA requirements for mechanical parts, materials and processes	
6.	The CI complies with the requirements for safety in accordance with:	N.A CGS provided inputs to NASA for the Flight Safety review
7.	All identified hazards are solved/closed	N.A CGS provided inputs to NASA for the Flight Safety review
8.	The CI has been cleaned and complies with the requirements for cleanliness.	
9.	The Acceptance Data Package (ADP) / System Log-book N° RICSYS-ED-CGS-002 is complete and is available for shipment with the CI	
10.	Open work/tests and unresolved non-conformances defined in ADP / System Log-book are acceptable for transfer to the user site	See next page
11.	Packaging and shipping arrangements are defined and agreed	N.A.
12.	Qualification of the item is satisfactory and recorded in	N.A.

	PRODUCT ASSURANCE MANAGER			PROGRAM MANAGER		
CONTRACTOR APPROVAL	L. CREMONESI		19.12.08	M. OLIVIER		19.12.08
	Name	Signature	Date	Name	Signature	Date
PRIME CONTRACTOR APPROVAL	PRODUCT ASSURANCE MANAGER			PROGRAM MANAGER		
	Name	Signature	Date	Name	Signature	Date
CUSTOMER APPROVAL	PRODUCT ASSURANCE MANAGER			PROGRAM MANAGER		
	Name	Signature	Date	Name	Signature	Date

All information contained in this document are property of CARLO GAVAZZI SPACE SpA. All rights reserved.

CARLO GAVAZZI SPACE SpA	RICH SYSTEM	Doc.: RICSYS-CC-CGS-005
		Date: 19.12.2008
	COC/COA CERTIFICATE OF CONFORMITY/ACCEPTANCE	Page: 2 of 2

ITEM DESCRIPTION:	PART N°/C.I. N°:	SERIAL N°:	MODEL:
ECAL-TCS ASSY	ECAL-TCS FM01	01	FM
SPECIFICATION N°:	**CUSTOMER:**	**CONTRACTOR:**	**CONTRACT N°:**
Allegato tecnico - manageriale al contratto I/ 020/ 03/ 0 JSC2 9789 Playload Integration Hardware	ASI	Carlo Gavazzi Space S.p.A.	ASI/CGS/020/03/0

Open Actions/Work:	Actionee:	Due Date:	Clos. Date:	Closure Ref.:
ECAL CORNER ZN MLI to be provided (Sect. 6 of RICSYS-ED-CGS-002)	CGS	Nov. 2008	12.09.2008	RTEM-DP-0003-AAE

Closure Signature:

	PRODUCT ASSURANCE MANAGER			PROGRAM MANAGER		
CONTRACTOR	L.CREMONESI		19.12.08	M. OLIVIER	M. Olivier	19.12.08
	Name	Signature	Date	Name	Signature	Date
PRIME CONTRACTOR	PRODUCT ASSURANCE MANAGER			PROGRAM MANAGER		
	Name	Signature	Date	Name	Signature	Date
CUSTOMER	PRODUCT ASSURANCE MANAGER			PROGRAM MANAGER		
	Name	Signature	Date	Name	Signature	Date

All information contained in this document are property of CARLO GAVAZZI SPACE SpA. All rights reserved.

CARLO GAVAZZI SPACE SpA	RICH SYSTEM

Tipo Doc.: *Doc.Type:*	LIST			N°DRD: *DRD N°:*	PA14
N°Doc.: *Doc. N°:*	**RICSYS-LI-CGS-002**	Ediz.: *Issue:* **3**	Data: *Date:* **Dec.'08**	Pagina *Page* **1**	Di *Of* **10**
Titolo : *Title :*	ECAL TCS CIDL/ABCL				

	Nome & Funzione *Name & Function*	Firma *Signature*	Data *Date*
Preparato da: *Prepared by:*	Cinquepalmi C. (PC/CC)	C. Cinquepalmi	18/12/08
Approvato da: *Approved by:*	Cinquepalmi C. (PC/CC) Cremonesi L. (PA/QA) Molina M. (DT/MT)	C. Cinquepalmi L. Cremonesi Molina	18/12/08 18/12/08 18/12/08
Applicazione autorizzata da: *Application authorized by:*	Olivier M. (DT/MT)	M. Olivier	18/12/08
Customer / Higher Level Contractor			
Accettato da: *Accepted by:*			
Approvato da: *Approved by:*			

LISTA DI DISTRIBUZIONE *DISTRIBUTION LIST*	N	A	I
Interna / *Internal*			
Cremonesi L. (PA/QA)	1	x	
Olivier M. (DT/MT)	1	x	
Esterna / *External*			
Russo E. (ASI)	1		x
Laurenti G. (INFN BO)	1	x	

N=Numero di copie A=Applicazione I=Informazione
N=Number of copy A=Application I=Information

Gestione documenti: *Data Management:*	Firma / *Signature*	Data / *Date* 18/12/08
File: RICSYS-LI-CGS-002 Issue 3.doc		

Questo documento contiene informazioni di proprietà di CARLO GAVAZZI SPACE SpA: Tutti i diritti sono riservati
All information contained in this document are property of CARLO GAVAZZI SPACE SpA. All right reserved.

REGISTRAZIONE DELLE MODIFICHE / *CHANGE RECORD*

EDIZIONE *ISSUE*	DATA *DATE*	AUTORIZZAZIONE *CHANGE AUTHORITY*	OGGETTO DELLA MODIFICA E SEZIONI AFFETTE *REASON FOR CHANGE AND AFFECTED SECTIONS*
1	18/05/07		First issue
2	20/06/08		General update of Annex A
3	Dec.'08		Annex A Documents Section update

Questo documento contiene informazioni di proprietà di CARLO GAVAZZI SPACE SpA. Tutti i diritti sono riservati.
All information contained in this document are property of CARLO GAVAZZI SPACE SpA. All right reserved.

LISTA DELLE PAGINE VALIDE / *LIST OF VALID PAGES*

PAGINA *PAGE*	EDIZIONE *ISSUE*	PAGINA *PAGE*	EDIZIONE *ISSUE*	PAGINA *PAGE*	EDIZIONE *ISSUE*	PAGINA *PAGE*	EDIZIONE *ISSUE*	PAGINA *PAGE*	EDIZIONE *ISSUE*
1 - 10	3								
Annex A									
A1-A3	3								

Questo documento contiene informazioni di proprietà di CARLO GAVAZZI SPACE SpA. Tutti i diritti sono riservati.
All information contained in this document are property of CARLO GAVAZZI SPACE SpA. All right reserved.

TABLE OF CONTENT

1. SCOPE **5**

2. APPLICABILITY **6**

2.1 APPLICABLE DOCUMENTS 6
2.2 REFERENCE DOCUMENTS 6

3. PRODUCT TREE **7**

3.1 DRAWINGS LIST 8

4. CONFIGURATION ITEM DATA LIST (CIDL) **9**

4.1 FIRST SECTION (DOCUMENTS SECTION) 9
4.2 SECOND SECTION (DRAWINGS SECTION) 9

5. AS DESIGNED/AS BUILT CONFIGURATION LIST **10**

5.1 ANNEX A: (ECAL TCS ASSY CIDL/ABCL) 10

Questo documento contiene informazioni di proprietà di CARLO GAVAZZI SPACE SpA. Tutti i diritti sono riservati.
All information contained in this document are property of CARLO GAVAZZI SPACE SpA. All right reserved.

1. SCOPE

The Configuration Item Data List / As Built Configuration data List (CIDL/ABCL), establishes the configuration status of the RICH ECAL TCS ASSY p/n: N.A. C.I. ECAL-TCS FM01 s/n: 01.

Questo documento contiene informazioni di proprietà di CARLO GAVAZZI SPACE SpA. Tutti i diritti sono riservati.
All information contained in this document are property of CARLO GAVAZZI SPACE SpA. All right reserved.

2. APPLICABILITY

This document shall be continuously updated, and applicable during all phases of activity concerning the a.m. item, activities undertaken by CGS.

2.1 APPLICABLE DOCUMENTS

The following documents, in the valid latest issue formally agreed with the Agency, form a part of this document to the extent specified herein. Documents referenced in the following specifications, standards, publications and procedures are also a part of this document and are applicable to the extent specified in the text to meet the specifications of this document.

AD #	Doc Number	Issue	Date	Rev	Title
01	RICSYS-SP-CGS-001	3	16/05/07		Ecal FM thermal hardware procurement specification
03	RICSYS-PT-CGS-003	1	14/05/07		Rich System ECAL TCS Product Tree

2.2 REFERENCE DOCUMENTS

RD#	Doc Number	Issue	Date	Rev	Title
1	GD-PL-CGS-001	3	17/03/99	n/a	Product Assurance & RAMS Plan
2	GD-PL-CGS-002	3	19-02-99		Configuration and Data Management Plan
3	ECSS-Q-70-36A	n/a	20/01/98	n/a	Space product assurance - Material selection for controlling stress-corrosion cracking

Questo documento contiene informazioni di proprietà di CARLO GAVAZZI SPACE SpA. Tutti i diritti sono riservati.
All information contained in this document are property of CARLO GAVAZZI SPACE SpA. All right reserved.

3. PRODUCT TREE

At the beginning of RICH SYSTEM program, a product tree has been prepared to identify and describe the basic design composition at system level and kept updated.
Product tree for RICH ECAL TCS ASSY shall be kept updated to describe the C.I. composition at lower levels, for clarification see AD03.

Questo documento contiene informazioni di proprietà di CARLO GAVAZZI SPACE SpA. Tutti i diritti sono riservati.
All information contained in this document are property of CARLO GAVAZZI SPACE SpA. All right reserved.

3.1 DRAWINGS LIST

All the released drawings have been recorded in a drawing index and status list reporting:

- Drawing sequential number
- Drawing identification Number
- Drawing title
- Issue status(first issue of the drawing indicated as / , followed by A, B, etc.)
- N°of sheets
- Size of drawings
- Alterations (approved change authority)

While usually issued as a separated document, the Parts List in case of simple drawings can be part of the first drawing sheet, especially at the lower levels.

Questo documento contiene informazioni di proprietà di CARLO GAVAZZI SPACE SpA. Tutti i diritti sono riservati.

All information contained in this document are property of CARLO GAVAZZI SPACE SpA. All right reserved.

4. CONFIGURATION ITEM DATA LIST (CIDL)

The CIDL ,as in the annexed list, is a tabulation of the engineering documentation comprising drawings, specifications, part list and procedures required to manufacture, assembly and test a configuration item.
Its content will progressively increase as the design progresses.
Beginning with the design/performance requirements, interface control documents and, as the design is devoted, released manufacturing drawings, until at acceptance it provides the complete engineering "as designed" description configuration.
The CIDL will be mainly divided into two functional sections.

4.1 FIRST SECTION (DOCUMENTS SECTION)

It lists all documents applicable to the design, manufacturing, acceptance, testing relevant to the subjected CI, if any, with their proper issue status/date and any approved but not yet included change.

These documents are the following:

- Performance requirements
- Design and support specifications
- I/F documents
- Parts and materials lists
- Test procedures
- Handling, loading and transport procedures
- List of applicable waivers
- Operations and maintenance manual

These documents shall be subdivided into subsections for clarification.

4.2 SECOND SECTION (DRAWINGS SECTION)

It lists all drawings providing the engineering definition of the CI from the top level assembly down to detail drawings.

The list shall be prepared as described in § 3.1 moreover showing level identification of all the drawings and used quantity of each item.

Questo documento contiene informazioni di proprietà di CARLO GAVAZZI SPACE SpA. Tutti i diritti sono riservati.
All information contained in this document are property of CARLO GAVAZZI SPACE SpA. All right reserved.

5. AS DESIGNED/AS BUILT CONFIGURATION LIST

The CIDL/ABCL compare the current "as designed" configuration with the "as built" configuration, which consists of a list of drawings with their issue/revision index, as they have been applied at manufacturing time.
The "as built" configuration must also identify all manufacturing and test step, equipment items, failure and non conformance documents and all pertinent engineering documentation.
Reconciliation between "as designed" and "as built" status is documented in the ABCL section/columns and all differences will be:

- Non Conformance Reports (NCR)
- Waivers granted

The ABCL section/columns shall be filled in only during manufacturing activity of the Project.

5.1 ANNEX A: (ECAL TCS ASSY CIDL/ABCL)

The above mentioned list follows hereafter.

Questo documento contiene informazioni di proprietà di CARLO GAVAZZI SPACE SpA. Tutti i diritti sono riservati.
All information contained in this document are property of CARLO GAVAZZI SPACE SpA. All right reserved.

CARLO GAVAZZI SPACE SpA	CIDL/ABCL	Doc.N°. : Annex A to RICSYS-LI-CGS-002 Date: 20/06/08 DRD N°: PA14 Issue: 2 Page:
	CONTRACTOR: ASI PART DESIGNATION: ECAL TCS Assy MODEL: FM	PART N°C.I.N°: N.A. / ECAL-TCS FM01 SERIAL NUMBER: 01

ITEM id. LEVEL	DWG/DOC seq NUM	DRAWING/DOC./ITEM IDENTIFICATION NUMBER	TITLE/NOMENCLATURE	AS DESIGNED			AS BUILT CONFIGURATION LIST		
				ISSUE	DATE	REMARKS/ECO	Q.ty	NCR	REMARKS
DOCUMENTS SECTION									
		C.I. INPUT REQUIREMENTS SECTION Applicable **documents**							
		ASI / CGSI / 020 / 03 / 0	RICH **SYSTEM Contract**						
		ECSS-Q-70B	Materials, mechanical parts and processes	B	14 December 2004				
		Product Specification							
		GD-PL-CGS-001	Product Assurance & **RAMS Plan**	3	17/03/1999				
		GD-PL-CGS-002	Configuration and Data Management Plan	3	12/02/1999				
		RICSYS-SP-CGS-001	Ecal FM **thermal hardware procurement specification**	3	16/05/2007				
		Design Definition							
		RICSYS-IC-CGS-001	ECAL **Thermal Control System Interface Control Document**	1	04/05/2007				
		RICSYS-SB-CGS-006	ECAL **Trasys/Sinda Mathematical Models**	2	16/01/2007				
		RICSYS-TN-CGS-004	ECAL HEATERS AND **THERMOSTATS** INTEGRATION DESCRIPTION	1	14/05/2007				
		RICSYS-MA-CGS-003	ECAL **TCS Handling, Storage, Operation and Maintenance Manual**	1	16/05/2007				
		Test & Verification							
		RICSYS-PR-CGS-008	ECAL **Thermal test procedure**	3	31/08/2006				
		RICSYS-RP-CGS-015	Ecal Thermal Analysis Report	2	07/03/2005				
		RICSYS-RP-CGS-019	ECAL **THERMAL VACUUM TEST REPORT**	1	12/10/06				
		RICSYS-RP-CGS-020	ECAL **Thermal Control System Design report**	1	15/01/07				
		Product Tree							
		RICSYS-PT-CGS-003	Rich System ECAL **TCS Product Tree**	1	14/06/2007				
		Austrian AeroSpace							
		Data Package :							
		RTEM-DP-0002-AAE	ECAL Corner ZP MLI Acceptance Data **Package**	1.0	19 Dec 2007				**Austrian AeroSpace**
		RTEM-DP-0003-AAE	ECAL Corner ZN MLI Acceptance Data **Package**	1.0	12 Sep 2008				**Austrian AeroSpace**

All information contained in this document are property of CARLO GAVAZZI SPACE SpA. All rights reserved.

CARLO GAVAZZI SPACE SpA

CIDL/ABCL

Doc.N°: Annex A to RICSYS-LI-CGS-002
Date: 20/06/08 DRD N°: PA14
Issue: 2 Page:

CONTRACTOR: ASI
PART DESIGNATION: ECAL TCS Assy
MODEL: FM
PART N°/C.I.N°: N.A. / ECAL-TCS FM01
SERIAL NUMBER: 01

ITEM Id. LEVEL	DWG/DOC seq NUM	DRAWING/DOC./ITEM IDENTIFICATION NUMBER	TITLE/NOMENCLATURE	AS DESIGNED ISSUE	AS DESIGNED DATE	AS DESIGNED REMARKS/ECO	AS BUILT CONFIGURATION LIST Q.ty	AS BUILT CONFIGURATION LIST NCR	AS BUILT CONFIGURATION LIST REMARKS
DRAWINGS SECTION									
A		**ECAL TCS ASSY C.I. ECAL-TCS FM01 s/n : 01 p/n : N.A**							
		7015-01A0011/3/3/7	Thermostat				8		
		R0632	Heater				16		See Shipping note N°144 dated 03/04/06 Delivered to LAPP France (Q.ty 8)
		TBD	MLI Blanket						
		167149-001	Radiator tape - Embossed Teflon						
		62-10-0909-A274	Thermal filler				16		See Shipping note N°288 dated 23/09/04 Delivered to INFN Pisa (Q.ty 16)
		DELIVERED LOOSE ITEMS (Spare Parts)							
		7015-01A0011/3/3/7	Thermostat				4		
		R0632	Heater				4		
		ECAL Corner ZP MLI :							
		THERMAL HARDWARE:							
		G4070-100-210-00 s/n:01	BLANKET ECAL Corner ZPXNYN				1		Austrian AeroSpace
		G4070-100-220-00 s/n:01	BLANKET ECAL Corner ZPXNYP				1		Austrian AeroSpace
		G4070-100-230-00 s/n:01	BLANKET ECAL Corner ZPXNYN				1		Austrian AeroSpace
		G4070-100-240-00 s/n:01	BLANKET ECAL Corner ZPXNYP				1		Austrian AeroSpace
		ATTACHMENT HARDWARE:							
		G300-409-000-00/A	Stand-off dia 3-5				20		Austrian AeroSpace
		G300-410-000-00/A	Stand-off dia 3-8				4		Austrian AeroSpace
		SKQ-V10165/Rev.1	Clipwasher dia 3 / dia 11				24		Austrian AeroSpace
		SPARE HARDWARE:							
		G300-409-000-00/A	Stand-off dia 3-5				2		Austrian AeroSpace
		G300-410-000-00/A	Stand-off dia 3-8				1		Austrian AeroSpace
		SKQ-V10165/Rev.1	Clipwasher dia 3 / dia 11				6		Austrian AeroSpace
		MISCELLANEOUS HARDWARE:							
		G4070-100-210-00/A	Manufacturing Template				1		Austrian AeroSpace

All information contained in this document are property of CARLO GAVAZZI SPACE SpA. All rights reserved.

CARLO GAVAZZI SPACE SpA	CIDL/ABCL	Doc.N°: Annex A to RICSYS-LI-CGS-002 Date: 20/06/08 DRD N°: PA14 Issue: 2 Page:
	CONTRACTOR: ASI PART DESIGNATION: ECAL TCS Assy MODEL: FM	PART N°C.I.N°: N.A. / ECAL-TCS FM01 SERIAL NUMBER: 01

ITEM Id. LEVEL	DWG/DOC seq NUM	DRAWING/DOC./ITEM IDENTIFICATION NUMBER	TITLE/NOMENCLATURE	AS DESIGNED			AS BUILT CONFIGURATION LIST		
				ISSUE	DATE	REMARKS/ECO	Q.ty	NCR	REMARKS
		G4070-100-220-00/A	Manufacturing Template				1		Austrian AeroSpace
		G4070-100-230-00/A	Manufacturing Template				1		Austrian AeroSpace
		G4070-100-240-00/A	Manufacturing Template				1		Austrian AeroSpace
		ECAL Corner ZN MLI :							
		THERMAL HARDWARE							
		G4070-100-250-00/A s/n:01	BLANKET ECAL Corner ZNXNYN				1		Austrian AeroSpace
		G4070-100-260-00/A s/n:01	BLANKET ECAL Corner ZNXNYP				1		Austrian AeroSpace
		G4070-100-270-00/A s/n:01	BLANKET ECAL Corner ZNXNYN				1		Austrian AeroSpace
		G4070-100-280-00/A s/n:01	BLANKET ECAL Corner ZNXNYP				1		Austrian AeroSpace
		G4070-100-120-00/A s/n:01	Blanket RICH Lateral XN				1		Austrian AeroSpace
		G4070-100-125-00/A s/n:01	Blanket RICH Lateral XP				1		Austrian AeroSpace
		G4070-100-130-00/A s/n:01	Blanket RICH Lateral YN				1		Austrian AeroSpace
		G4070-100-135-00/A s/n:01	Blanket RICH Lateral YP				1		Austrian AeroSpace
		MISCELLANEOUS HARDWARE							
		G4070-100-XXX-00/A	Manufacturing Template				8		Austrian AeroSpace
		RTEM-TLS-0006-AAE Issue 1.0	Blanket inspection sheets				2		Austrian AeroSpace

All information contained in this document are property of CARLO GAVAZZI SPACE SpA. All rights reserved.

NOTES AND COMMENTS

CONTRACTOR: Carlo Gavazzi Space S.p.A. **ITEM DESCRIPTION:** ECAL-TCS ASSY	**MODEL:** FM **PART N°/C.I. N°:** ECAL TCS FM01	**SERIAL N°:** 01

Seq. N°	DESCRIPTION
1	MLI TO BE PROVIDED ECAL CORNER ZN MLI PROVIDED SEE RTEM-DP-0003-AAE

All information contained in this document are property of CARLO GAVAZZI SPACE SpA. All rights reserved.

5

CARLO GAVAZZI SPACE SpA	RELAZIONE DI RIUNIONE / VISITA *MINUTES OF MEETING / VISIT*	N° AMSTCS-MI-CGS-029 FOGLIO / SHEET 1 DI / OF 4 ANNEX

DATA - DATE	LOCALITA - LOCATION	COMMESSA - JOB	RIF - REF
14/11/2008	CERN	2011 I , AMS TCS	

IMPIANTO *PROJECT*	DESCRIZIONE *DESCRIPTI*		CLIENTE - *CUSTOMER*
	LOCALITA *LOCATION*	CERN	ORDINE - *CONTRACT*
SCOPO RIUNIONE *PURPOSE OF MEETING*	AMS-02 INSTALLATION FOR BRICKS MLI FM, RICH LATERAL MLI FM, ECAL CORNER ZN MLI FM AND RICH BOTTOM REWORKING		REDATTO – *WRITTEN BY*: V. LATINI LISTA DI DISTRIBUZIONE *DISTRIBUTION LIST*: M OLIVIER (CGS) ✓ L CREMONESI (CGS) ✓ M.MOLINA (CGS) ✓

PRESENTI - *ATTENDED BY*	NOMI – *NAMES*	POSIZIONE - *POSITION*	
	V LATINI (CGS)	Tech. (CGS)	M. BARAC (AAE)
	C VETTORE (CGS)	System Eng. (CGS)	R Olschnegger (AAE)
	J BURGER (AMS collaboration)	TCS system Eng (AMS)	M. Neuhaeuse (AAE)
	C GARGIULO(AMS collaboration)	PAIQA (AMS)	F. FAccHin ✓
			H. ZAPPino ✓

PUNTI *ITEMS*	ARGOMENTI DISCUSSI – DESCRIPTION OF DISCUSSION	AZIONE A CURA [1] *ACTION BY* [1]
1	**FM MLI , LIST OF DELIVERED ITEMS:** On day 10/11/2008 the following FM blankets have been delivered by CGS to CERN in accordance to AMS collaboration request to maintain the current integration schedule. BRICKS • Blanket Brick EHV XPYN G4370-110-310-00/A S/N01 • Blanket Brick EHV XPYN G4370-110-315-00/A S/N01 • Blanket Brick RHV EHV XNYN G4370-110-320-00/A S/N01 • Blanket Brick RHV EHV XPYP G4370-110-325-00/A S/N01 • Blanket Brick RHV XNYP G4370-110-330-00/A S/N01 • Blanket Brick RHV XPYN G4370-110-335-00/A S/N01 RICH Lateral • Blanket RICH Lateral XN G4070-100-120-00/A S/N01 • Blanket RICH Lateral XP G4070-100-125-00/A S/N01 • Blanket RICH Lateral YN G4070-100-130-00/A S/N01 • Blanket RICH Lateral YP G4070-100-135-00/A S/N01 ECAL CORNER ZN • Blanket Ecal Corner ZNXNYN G4070-100-250-00/A S/N01 • Blanket Ecal Corner ZNXNYP G4070-100-260-00/A S/N01 • Blanket Ecal Corner ZNXPYN G4070-100-270-00/A S/N01 • Blanket Ecal Corner ZNXPYP G4070-100-280-00/A S/N01 LTOF: • Blanket L-Tof XP G4070-100-140-00/A S/N01 • Blanket L-Tof XN G4070-100-145-00/A S/N01 • Blanket L-Tof YP G4070-100-150-00/A S/N01 • Blanket L-Tof YN G4070-100-155-00/A S/N01	

N° LZ

RICEVUTO IL 05 DIC. 2008

Commessa 2011

Data copia a: VEDI SOPRA

CARLO GAVAZZI SPACE SpA	RELAZIONE DI RIUNIONE / VISITA *MINUTES OF MEETING / VISIT*	N° AMSTCS-MI-CGS-029 FOGLIO *SHEET* 2 DI *OF* 4 ANNEX

DATA – *DATE*	LOCALITA' – *LOCATION*	COMMESSA – *JOB*	RIF – *REF*
14/11/2008	CERN	2011 I , AMS TCS	

PUNTI *ITEMS*	ARGOMENTI DISCUSSI – DESCRIPTION OF DISCUSSION	AZIONE A CURA [1] *ACTION BY* [1]
2.	**FM MLI DELIVERED ITEMS INCOMING INSPECTION** On days 10 and 11/11/2008 former FM blankets have been unpacked and successfully inspected by CGS in situ: *1) Shock Recorders outside the container are not present* *2) No damages are present on the containers except for a large dent in the cover of the Aluminum Box (Colli 3193) containing LTOF XP and XM blankets and EHV and RHV brick blankets (no damage to contents).* *3) Desiccants bags present inside the container* *4) shipping documentation present :* *-Delivery note with the Deliverable Item list* *- Blankets Inspection Sheet* *- Hardware Acceptance Data Package* *5) Correspondence of the items P/N written in the Deliverable Item list with the P/N written in the label attached to each hardware plastic bag verified* *6) Blankets have been inspected and no damage on Bricks Blankets was identified. RICH Lateral, ECAL Corner ZN and LTOF MLI Blankets have not been extracted from sealed plastic bag since final installation will be performed in a subsequent integration slot.* *7) Aluminum MLI attachment supports (tie-downs) have no sharp edges*	
3.	**FM MLI INSTALLATION:** The following installation activities have benn performed by the AAE personnel (M. Barrac) under the supervision of CGS and AMS personnel: (V. Latini , C.Vettore , J. Burger , C.Gargiulo)	
4.	**FM MLI INSTALLATION :** BRICKS MLI On days 11, 12 and 13 Bricks FM blankets have been installed on AMS-02 according to ATS TCS081030-24 (annex 1). 20 additional tie-downs have been mounted on bricks top and bottom surfaces to tighten blankets to the hardware. 10 additional tie-downs, requested by AMS collaboration, have been mounted on bricks bottom surfaces for bricks cable fixation. Temporary lacing (instead of permanent lacing) is requested by AMS Collaboration for all tie downs with the exception of the ones additionally located on the bottom of the HV bricks (tie downs on the connector side). Final lacing will be performed by AMS collaboration during a subsequent integration slot. Grounding cable is fixed and routed. The final resistance measurement has been performed. Details are shown in: ▪ DR_081112_13 ▪ DR_081112_13_A ▪ MOD1_TCS081030-24	
5.	**FM MLI INSTALLATION : ECAL CORNER ZN** The ECAL Corner ZN MLI blankets final installation cannot not been performed since the required accessibility to the fit-check and installation location is prevented by the MGSE. Grounding cable fixation on structure side has been performed. Due to the lack of the grounding cable at MLI side the final resistance	

1) INDICARE IL NOMINATIVO RESPONSABILE DELL'AZIONE E DATA DI COMPLETAMENTO
1) *ACTUAL PERSON RESPONSIBLE FOR THE ACTION AND COMPLETION DATE SHALL BE SHOWN*

PUNTI *ITEMS*	ARGOMENTI DISCUSSI – DESCRIPTION OF DISCUSSION	AZIONE A CURA [1] *ACTION BY* [1]
	measurement can not be done. Grounding cable fixation has been completed for ECAL Corner ZP MLI and DR080117_2 is closed. ECAL Corner ZN MLI blankets final installation will be performed by AMS collaboration during AMS final integration when MGSE is dismounted and accessibility is guaranteed. Details are shown in: ▪ DR_081112_14 ▪ DR_081112_14_A ▪ MOD1_TCS081030-25	
6.	**FM MLI INSTALLATION : RICH Lateral MLI** On days 10-14/11/08 final RICH Lateral MLI blankets reworking and integration has not been performed because of: ▪ RICH cables are not in their final flight configuration due to the lack of the debris shield ▪ Debris shield is not mounted As a consequence the slits necessary for the RICH cables (foreseen in TCS080401-15, section 11) can not be implemented. Grounding cable at structure side is fixed and routed according to ATS TCS081030-25. Due to the lack of the grounding cable at MLI side the final resistance measurement can not be done. 16 additional tie-downs have been mounted on LTOF structure due to the presence of optical sealed windows (not previously foreseen) which prevent RICH Lateral MLI fixation. Lacing on the top part of the blanket shall be done with new positioned tie-downs during a subsequent installation slot. A fit-check of one template (-x direction) has been performed in order to very any additional issue for the slit and IF with cables, RICH bottom blanket and eventually with SL blanket on LUSS corner. Details of the work to be performed by AMS collaboration or NASA personnel are collected in: ▪ DR_081112_14 ▪ DR_081112_14_A ▪ MOD1_TCS081030-25	
7.	**FM MLI REWORKING: RICH BOTTOM** On day 13/11/08 RICH BOTTOM reworking has been performed according to ATS TCS081030-25: Velcro patches have been sewed on peripheral area which overlap with RICH Lateral MLI. On day 14/11/08 clip washer have been fixed. Grounding cable is fixed and routed. The final resistance measurement has been performed. The RICH BOTTOM MLI blankets final installation can not be performed since the RICH LATERAL MLI is not installed. Final installation of these blankets shall be done in a subsequent integration slot. Details are shown in: ▪ DR_081112_14 ▪ DR_081112_14_A	

1) INDICARE IL NOMINATIVO RESPONSABILE DELL'AZIONE E DATA DI COMPLETAMENTO
1) *ACTUAL PERSON RESPONSIBLE FOR THE ACTION AND COMPLETION DATE SHALL BE SHOWN*

PUNTI *ITEMS*	ARGOMENTI DISCUSSI – DESCRIPTION OF DISCUSSION	AZIONE A CURA [1] *ACTION BY* [1]
	▪ MOD1_TCS081030-25	
8.	**CONCLUSIONS AND COMMENTS:** All the delivered blankets have been accepted by the AMS collaboration representatives with respect to the applicable technical requirements. RICH Lateral, ECAL Corner ZN, LTOF FM blankets are properly stored inside their protective bags and aluminium box in CERN cleanroom (room #8677B-F44 Electronic Pref.) waiting for final integration from AMS\NASA personnel. Risk of custody is transferred from AAE\CGS to AMS collaboration. Being the blankets a CGS\ASI property until ASI contract closure, any activity that require usage\modification of the delivered blankets shall be in any case executed only after CGS authorization.	
9.	End of MoM	

1) INDICARE IL NOMINATIVO RESPONSABILE DELL'AZIONE E DATA DI COMPLETAMENTO
1) *ACTUAL PERSON RESPONSIBLE FOR THE ACTION AND COMPLETION DATE SHALL BE SHOWN*

ECAL Corner ZN MLI

Acceptance Data Package

DRL: -
CI-No.: -

AAE-CADM
16. SEP 2008
RECEIVED

	NAME:	FUNCTION:	SIGNATURE:	DATE:
Prepared:	R. Olschnegger	Project Engineer		12/09/2008
Checked:	J. Kalcher	Product Assurance		15/9/2008
Approved:	M. Neuhäuser	Project Manager		16/9/2008

This document is property of AUSTRIAN AEROSPACE Ges m b H.

Document No: **RTEM-DP-0003-AAE**

Issue No: **1.0**

Issue Date: **12 Sep 2008**

DRL: -

CI-No: -

Distribution:

Internal: NEM, OLR

External: Carlo Gavazzi Space, Mrs. V. Latini

Number of pages of main document (incl. cover pages, excl. annexes etc.): **I-III, 1-23**

Number of pages attached (annexes etc.): **8 + 2 Dox.**

Document Change Log:

Issue	Date	Modified Pages	Description
1.0	12 Sep 2008	All	Initial Issue

This document is property of AUSTRIAN AEROSPACE Ges.m b H

Table of Contents

Sec	DOCUMENTS INCLUDED	REMARKS	VOL. / Sheets
1	Shipping Documents / Deliverable Items List	☒	1 / 3
2	Generic Handling Procedure	☒	1 / 1 + 1 Doc
3	Generic Integration Procedure	☒	1 / 1 + 1 Doc
4	Certificates	☒	1 / 2
5	Historical Record / Logbook	☒	1 / 5
6	Integration Sign-off Sheets	☒	1 / 4
7	Mixture Records	☒	1 / 1
8	Open Work List	☒	1 / 1
9	Blanket Drawings	☒	1 / 5
10	Interface Control Drawings	☒	1 / 5
11	Acceptance Test Reports / Mass Records	☒	1 / 3

This document is property of AUSTRIAN AEROSPACE Ges.m.b.H.

1. SHIPPING DOCUMENTS / DELIVERABLE ITEMS LIST

This document is property of AUSTRIAN AEROSPACE Ges m b H

Austrian Aerospace

Delivered from: **Austrian Aerospace**
Leobersdorfer Strasse 26,
Industrieareal Obj.43
2560 Berndorf, AUSTRIA

Ansprechpartner: Contact: Fax: +43 2672 83520 15

Lieferung: Delivery: Mr. A. Potakowskyj

Technical response: Mr. R. Olschnegger

DELIVERY NOTE / PROFORMA INVOICE

CERN Organisation Européenne
pour la Recherche Nucléaire
F-01631 CERN Cedex
FRANCE

VAT-No:

Vienna, 03.09.2008

For the attention of: DR. JOSEPH BURGER
Tel. No.: +41/ 22 767 5914

Our Reference No.: **RTEM/LET/00005-08/AAE** Your Ref. No.: Int. Distrib.: **NEM, GRU, OLR**

Item No..	Part - Description	Dimension (mm) lxwxh	Weight (kg)	Quantity	Unit Price (€uro)
0	**Aluminium Box (Colli 3192)**	1192 x 790 x 517	18		
	Seal Nr. 0005082				
1	**Contents** – see Deliverable Items List (encl.)				16.000 .-

For Customs purposes only
EUR 16.000 .-

Accounting: 717400 Sender / PM

Delivery Conditions DDU Cern

Country of origin: AUSTRIA
Type of delivery: via DHL
Value: **EUR 16.000.-**

This Merchandise is delivered to a country of the European Union, Free of VAT, use of VAT
No: our VAT Nr.: **ATU 15988304**

RECEIVED THIS CONSIGMENT IN GOOD ORDER:

Date Signature

Austrian Aerospace

DELIVERY NOTE / PROFORMA INVOICE

RTEM/LET/00005-08/AAE

DELIVERABLE ITEMS LIST

Thermal Hardware

Pcs.	Description	Drawing	SN	Remarks
1	Blanket Ecal Corner ZNXNYN	G4070-100-250-00/A	01	
1	Blanket Ecal Corner ZNXNYP	G4070-100-260-00/A	01	
1	Blanket Ecal Corner ZNXPYN	G4070-100-270-00/A	01	
1	Blanket Ecal Corner ZNXPYP	G4070-100-280-00/A	01	
1	Blanket RICH Lateral XN	G4070-100-120-00/A	01	
1	Blanket RICH Lateral XP	G4070-100-125-00/A	01	
1	Blanket RICH Lateral YN	G4070-100-130-00/A	01	
1	Blanket RICH Lateral YP	G4070-100-135-00/A	01	

Attachment Hardware

Pcs.	Description	Dimensions	Colli	Remarks
-	N/A			

Grounding Hardware

Pcs.	Description	Drawing	Colli	Remarks
-	N/A			

Miscellaneous Hardware

Pcs.	Description	Drawing	Remarks
8	Manufacturing Templates	G4070-100-XXX-00/A	Polyester foil
2	Blanket Inspection Sheets	RTEM-TLS-0006-AAE Issue 1.0	Page D1 and D2

2. GENERIC HANDLING PROCEDURE

Document Title	Document Number	Issue
Handling, Packing & Transportation Procedure	QSTD-MPRC-3031-AAE	1.0

THERMAL HARDWARE

Handling Procedure for Thermal Hardware

DRL: -
CI-No.: -

	NAME:	FUNCTION:	SIGNATURE:	DATE:
Prepared:	W. Hoidn	Engineering		
Checked:	C. Ranzenberger	Engineering		
Approved:	E. Prechelmacher	Project Management		

This document is property of AUSTRIAN AEROSPACE Ges.m.b.H.

Document No: **QSTD-MPRC-3031-AAE**

Issue No: **1.0**

Issue Date: **18 Apr 2000**

DRL: -

CI-No: -

Distribution:

Internal: RAN, STI, HOI, PRE (c)

External: -

Number of pages of main document (incl. cover pages, excl. annexes etc.): **11**

Number of pages attached (annexes etc.): **-**

Document Change Log:

Issue	Date	Modified Pages	Description
1.0	18 Apr 2000		Initial Issue (supersedes PRC-OR-3735/Iss. 1)

TABLE OF CONTENTS

1. INTRODUCTION 1

1.1 SCOPE 1

1.2 ACRONYMS 1

2. DOCUMENTS 2

2.1 APPLICABLE DOCUMENTS 2

2.2 REFERENCE DOCUMENTS 2

3. PRE-CONDITIONS 3

3.1 PERSONNEL 3

3.2 ENVIRONMENTAL CONDITIONS 3

3.3 MATERIALS AND EQUIPMENT 3

3.3.1 Handling Equipment 3

3.3.2 Packing Materials and Equipment 4

4. OPERATING INSTRUCTIONS 5

4.1 HANDLING OF MLI 5

4.1.1 Handling Measures 5

4.1.1.1 Thermal Blankets and Foils 5

4.1.1.2 Bonding Leads 6

4.1.1.3 Velcros 6

4.1.2 Cleanliness 6

4.2 PACKING INSTRUCTIONS 7

4.2.1 Cleaning of Container 7

4.2.2 Packing Materials 7

4.2.3 Packing and Unpacking of the Hardware 8

4.2.4 Storage 8

4.2.5 Inspection 8

1. INTRODUCTION

1.1 SCOPE

This procedure is applicable for handling, packing and transport of Thermal blankets and foils and related small parts.

The Thermal Blankets are a very delicate hardware, have been manufactured to very high quality standards and represent a considerable value. Therefore these items must be treated with utmost care and packed when not in use.

During the processes described in this procedure attention must be paid to avoid the damages listed below:

- contamination (both particular and molecular)
- scratches on the surfaces/coatings
- mechanical damages in the foils/groundings

1.2 ACRONYMS

AAE..... Austrian Aerospace Ges.m.b.H.
acc. ..... according
AD..... Applicable Documents
ADP ..... Acceptance Data Package
AIV..... Assembly, Integration, Verification
CIDL..... Configuration Item Data List
e.g. ..... for example
etc. ..... and-so-on
i.e. ..... this means
IPA ..... Isopropylalcohol
MLI..... Multi Layer Insulation
MRB..... Material Review Board
N/A..... Not Applicable
NCR..... Non Conformance Report
NVR ..... Non Volatile Residue
ITO..... Indium Tin Oxide
para. ..... paragraph
ppm..... parts per million
PSA..... Pressure Sensitive Adhesive
QA..... Quality Assurance
RD ..... Reference Document
TBC ..... To Be Confirmed
TBD ..... To Be Defined
T/H..... Thermal Hardware
VDA..... Vacuum Deposited Aluminum

2. DOCUMENTS

The following documents form part of this document to the extent specified here-in.

In the event of a conflict between this document and the Applicable Documents (AD), the AD shall have the precedence. In the event of a conflict between this document and a Reference Document (RD), this document shall have precedence.

Any such conflict should however be brought to the attention of AAE for resolution.

This document has been established based on the issues of ADs and RDs as given below. Issue changes of ADs and RDs will lead to an update of this document only in case of impacts on its content.

However, the valid documentation status is reflected in the relevant Configuration Item Data List (CIDL).

2.1 APPLICABLE DOCUMENTS

none

2.2 REFERENCE DOCUMENTS

RD1	PRC-OR-3706	Handhabungsvorschriften für Superisolationsmatten (Handling procedure for MLI; AAE internal procedure

3. PRE-CONDITIONS

3.1 PERSONNEL

Handling and Packing of thermal blankets/foils and related hardware shall only be performed by experienced personnel or under supervision of experienced personnel. The cleanroom procedure of the relevant cleanroom must be followed, and the use of clean gloves as described in para. 3.3.1 is mandatory. The use of an appropriate face mask is recommended when handling cleanliness critical items.

3.2 ENVIRONMENTAL CONDITIONS

Handling and Packing of thermal blankets and foils may only take place in cleanrooms which are compliant to the following requirements:

1. Cleanroom Class: better than 100.000 (acc. Fed. Std. 209E)
2. Relative Humidity: 50% ± 10%
3. Temperature: 22°C ± 3°C

3.3 MATERIALS AND EQUIPMENT

In the para's. below the min. necessary materials/equipment are listed, which are required to carry out the processes described in para. 4 below:

3.3.1 Handling Equipment

As a minimum the personnel handling the MLI blankets have to wear:

- Protective, cleanroom aproved clothing
- Gloves: clean lint free gloves or LATEX gloves must be used for handling of Thermal Hardware

This document is property of AUSTRIAN AEROSPACE Ges m b.H

3.3.2 Packing Materials and Equipment

For proper packing of thermal hardware the following materials have to be provided as a minimum:

- Inner Packing: Clear clean Mylar (Wrapping)
- Outer Packing: Polyethylene
- Tapes: Flashbreaker 1 Tape or equivalent
- Humidity indicator: Südchemie (Köln)
  No. 6685-12-194-4969
  range between 20% and 80% RH in steps of 10%
- Dessiccant

This document is property of AUSTRIAN AEROSPACE Ges m b H

4. OPERATING INSTRUCTIONS

4.1 HANDLING OF MLI

The thermal hardware is of high engineering quality and costs and the repairability is limited. Replacement of damaged hardware is very expensive and hardly available in time. Therefore all thermal hardware is to be handled with care appropriate for space applications at any time.

4.1.1 Handling Measures

This para. describes all necessary measures to be taken into account in order to maintain the thermo-optical, electrical and mechanical properties of MLI within acceptable limits during all phases of handling.

4.1.1.1 Thermal Blankets and Foils

To prevent the sensitive surfaces from being scratched, the foils shall not glide one on another or on the table. By applying appropriate care, touching, rubbing or tearing of the blankets on equipment in the cleanroom is to be avoided.

Scratching or contamination of these coatings would have negative influence on the insulation properties and is therefore to be avoided.

Thermal blankets and foils (in particular 3-dimensional shaped ones) shall not be bent, folded or deformed unduely to protect the foils and their brittle coatings.

Never use extensive force (especially during integration).

In order to avoid electro-statical charging of the (external) surfaces, all electrically conductive layers/coatings are grounded to the structure using grounding leads.

The electrically conductive and invisible ITO-coating often used on the outermost Kapton-layer is a very thin and brittle film.

Scratching and folding of ITO-coated Kapton-layers as well as in-appropriate handling of the grounding leads would impair the electrical properties and has therefore to be avoided.

This document is property of AUSTRIAN AEROSPACE Ges m b H

4.1.1.2 Bonding Leads

Most thermal blankets and foils are equipped with bonding leads. For weight saving reasons those grounding leads as well as their attachment to the foils is susceptible to mechanical damage.

Therefore the thermal blanket is never to be picked up or held on the grounding leads. The grounding leads must not be unduely bent or folded.

In order to keep the grounding lead from being caught by cleanroom equipment, from touching the ground and from scratching the sensitive surfaces of the foils, it is rolled to a diameter of approx. 60 mm, when not being attached to the spacecraft.

4.1.1.3 Velcros

Velcros are attachment elements consisting of a loop and a hook part. In order to avoid damage of the thermal hardware at velcro locations during removal from the spacecraft, the MLI must be held very close to the velcro which is being opened. Opened velcros can be covered with an appropriate (e.g. Mylar) foil, to avoid their re-connecting during opening of other velcros. Tearing on the MLI blanket edges only (with the force required to open all velcro connections) may result in tears in the MLI and is therefore not allowed.

4.1.2 Cleanliness

The cleanliness of thermal hardware is essential for its function. Therefore these items are manufactured, integrated, checked and handled under clean conditions.

In case of contamination, the cleaning of perforated foils is only possible on small, local areas and using lint-free, soft cleanroom cloth with IPA. Due to the sinsitivity of the coated, perforated foils, a general cleaning of MLI is not recommended.

The thermal blankets are to be protected against contamination by particles or fluids/greases. They may only be handled by personnel wearing gloves as specified in para. 3.3.1. If the gloves leave spots on the foils, they have to be replaced immediately by new ones.

All equipment (tables etc.), which come in direct contact with the foils, must be appropiately clean.

The relevant cleanroom procedure has to be followed.

This document is property of AUSTRIAN AEROSPACE Ges.m.b.H.

4.2 PACKING INSTRUCTIONS

4.2.1 Cleaning of Container

NOTE: Cleaning activities on the container must not start before all blankets are safely wrapped.

Isopropanol alcohol is the selected cleaning medium for the container, both internally and externally. Lint-free cloth must be used.

Although the seal in the container rim is capable of coming into contact with the cleaning medium, it should not be saturated with such.

The container shall be located close to the airlock in a pre-cleaned environment and shall be cleaned thoroughly internally and externally.

NOTE: The container must always be closed when no loading/unloading activity is in progress.

After cleaning has been performed, washing of hands is obligatory, and the container should be left open for 5 minutes to allow for evaporation of cleaning agent.

4.2.2 Packing Materials

It is generally possible to re-use the packing material; damaged packing foils must be replaced with new ones (for materials see para. 3.3).

Each thermal blanket is first wrapped in clear mylar. Then it is packed in a polyethylene outer bag.

The humidity indicator and desiccants (min. 6 units per m^2 polyethylene foil) are added and finally the polyethylene outer bag is sealed.

Each outer bag will be provided with a label at least containing the part number of the blankets included.

This document is property of AUSTRIAN AEROSPACE Ges m b.H

4.2.3 Packing and Unpacking of the Hardware

All thermal blankets and foils shall be packed in a reuseable container designed to provide sufficient protection of the thermal hardware.

Stacking of blankets is acceptable, if the foils are separated by spacer netting.

Blankets without spacer netting ("embossed" or "crinkled" foils) shall not be compressed to avoid flattening of the foils, which would reduce the thermal performance.
This type of MLI shall be seperated by drawers or the polyethylene bag (used as outer packing of blankets) shall include a certain amount of air (compressed with a flat plate, there shall be a distance of 1 cm between the top of the MLI and the plate) to avoid compressing of the blankets due to stacking of the bags during transport and storage.

NOTE: A minimum bending diameter of 50 mm shall be ensured, if folding of blankets is necessary. Bending of ITO coated blankets shall be avoided whenever possible, because of the brittle coating.

Before loading of the container, place a layer of polyethylene into the empty container such, that the polyethylene can be folded over the packed MLI blankets.

Once the last blanket has been loaded into the container, close the protective polyethylene and fix it with tape.

4.2.4 Storage

For short-term laying down of thermal blankets (i.e. storage time shorter than 1 working day) the relevant insulation item has to be put on a clean area and to be immediately covered by clean, clear mylar foils whenever not in use.

If the foreseen storage time exceeds the short-term period, the respective insulation item has to be packed in accordance with para. 4.2.3 and stored.

4.2.5 Inspection

Each time hardware items are placed into their respective protection bags, they should be visually inspected for any signs of damage.

This document is property of AUSTRIAN AEROSPACE Ges.m b.H.

3. GENERIC INTEGRATION PROCEDURE

Document Title	Document Number	Issue
Generic Integration Procedure	QSTD-MPRC-3054-AAE	1.0

This document is property of AUSTRIAN AEROSPACE Ges m b.H

AAE-CADM
12. 10. 2006
RECEIVED

Quality Standard

Generic Integration Procedure for MLI Blankets and Foils

DRL: -
CI-No.: -

	NAME:	FUNCTION:	SIGNATURE:	DATE:
Prepared:	C Ranzenberger	Thermal Engineer		20/09/2006
Checked:	A. Köksal	AIV & Facility Manager		28/9/06
Checked:	A. Potakowskyj	Product Assurance		28/9/06
Authorized:	J Kornigg	Process Owner		11/10/06

This document is property of AUSTRIAN AEROSPACE Ges.m.b.H.

Document No: QSTD-MPRC-3054-AAE

Issue No: 1.0

Issue Date: 26 Aug 2006

DRL: -

CI-No: -

Distribution:

Internal: Intranet

External: -

Number of pages of main document (incl. cover pages, excl. annexes etc.): **41**

Number of pages attached (annexes etc.): **-**

Document Change Log:

Issue	Date	Modified Pages	Description
1.0	26 Aug 2006	all	Initial Issue

This document is property of AUSTRIAN AEROSPACE Ges.m.b.H.

TABLE OF CONTENTS

1. INTRODUCTION 1
1 1 SCOPE 1
1.2 THERMAL BLANKETS 1
1 3 ACRONYMS 2

2. DOCUMENTS 3
2.1 APPLICABLE DOCUMENTS 3
2.2 REFERENCE DOCUMENTS 3

3. RESPONSIBILITIES 4

4. PRE-CONDITIONS 5
4.1 PERSONNEL 5
4.2 APPLICABLE CLEANLINESS CONDITIONS 5
4.3 APPLICABLE ENVIRONMENTAL CONDITIONS 5
4.4 TOOLS AND EQUIPMENT 6
4.5 MATERIAL AND HARDWARE 6

5. CLEANING 7
5.1 SAFETY CONSIDERATIONS 7
5.2 CLEANING PROCESSES 7
5.2.1 Cleaning of Thermal Blankets and Foils 7
5.2.1 1 Cleaning with Cleaning Solvent 7
5.2.1.2 Cleaning with GN_2 8
5.2.2 Cleaning of Bonding Leads 8
5.2.3 Cleaning of Small Parts 8
5.3 INSPECTION AND DOCUMENTATION 8

6. REPAIR 9
6.1 REPAIR CRITERIA 9
6.2 REPLACEMENT CRITERIA 9
6.3 DETAILED REPAIR METHODS 10
6.3.1 Tears in Blankets 10
6.3.2 Holes in Blankets 10
6.3.3 Repair tapes 10
6.3.4 Contamination of Blanket 10
6.3.5 Attachment Replacement 11
6.3.5.1 Clip Washers 11
6.3.5.2 Velcros 11
6.3.6 Electrical Bonding 11
6.3.6.1 Repair of Bonding Lead 11
6.3.6.2 Repair of Grounding Points 12

6.4 DOCUMENTATION 12

7. INTEGRATION OF ATTACHMENTS 13

7 1 SPECIAL PRE-CONDITIONS 13

7.2 BONDING OF STAND-OFFS 13
7.2.1 Position Marking 13
7.2.2 Preparation of Stand-Offs 13
7.2.3 Substrate Preparation 14
7.2.4 Adhesive Mixture 14
7.2.5 Application of adhesive and stand-off 14
7.2.6 Fixation for Curing 14

7.3 BONDING OF VELCROS 15
7.3.1 Preparation of Velcros 15
7.3.2 Position Marking & Masking 15
7.3.3 Substrate Preparation 15
7.3.4 Adhesive Mixture 15
7.3.5 Application of adhesive and Velcro 15

8. INTEGRATION OF BLANKETS 16

8.1 GENERAL INSTRUCTIONS 16
8.1.1 Pre-Conditions 16
8.1.2 Preparation of Working Surfaces 16
8.1.3 Blanket Identification 16
8.1.4 Marking of Stand-Off Holes on the Blanket 17
8.1.5 Installation of Structural Bonding Lead Parts 17
8.1.6 Punching of Stand-Off Holes into the Blankets/Foils 17
8.1.7 Attachment of Clip Washers 18
8.1 8 Attachment of Blankets and Foils to the Structure 19
8.1.8.1 Opening of Velcros 19
8.1.9 Overlapping Rules 20
8.1 10 Closure of Blanket Overlaps 21
8.1.11 Connection of Bonding Leads 22
8.1.12 Open Work 23
8.1 13 Documentation 23

8.2 SPECIFIC INSTRUCTIONS 24

ANNEX A: GENERAL ARRANGEMENT DRAWING (EXAMPLE) A.1

ANNEX B: BONDING INSTRUCTIONS B.1

ANNEX C: INTEGRATION SIGN-OFF SHEETS C.1

ANNEX D: OPEN WORK LIST D.1

ANNEX E: LIST OF HARDWARE TO BE INTEGRATED E.1

This document is property of AUSTRIAN AEROSPACE Ges.m.b.H.

TABLE OF FIGURES

Figure 4-1: Hollow punch (typ.) 6
Figure 7-1 Fixation Tape for Stand-Off 14
Figure 8-1: Marking Tag 16
Figure 8-2 Clip Washer Attachment 18
Figure 8-3 Opening of Velcros 19
Figure 8-4 Single Overlap 20
Figure 8-5 Overlapping at Corners 20
Figure 8-6 Closing of Blanket Overlaps using Tapes 21
Figure 8-7. Securing of bonding lead connections 22
Figure 8-8· Example for General Arrangement Drawing A.1

TABLE OF TABLES

Table 4-1 Environmental Conditions 5
Table 8-1 Form for Bonding Instructions B.1
Table 8-2: Form for Adhesive Mixture Record B.2
Table 8-3: Form for Integration Sign-off Sheet C.1
Table 8-4: Form for Open Work Definition D.1

1. INTRODUCTION

1.1 SCOPE

The scope of this document is to provide all necessary information needed for proper integration of MLI thermal blankets, foils and related small parts, which are to be manufactured, procured and delivered by AAE.

This procedure is applicable for all generic aspects of cleaning, repair and integration of MLI thermal blankets, foils and related small parts.

The relevant instructions for proper handling, packing and transport are described in AD1.

Instructions specific to a certain application/project will be provided separately in the relevant sections of the delivery documents using the forms defined in the annexes of this generic document.

1.2 THERMAL BLANKETS

The thermal blankets and foils are a very delicate hardware, have been manufactured to very high quality standards and represent a considerable value. Therefore these items must be treated with utmost care and packed when not in use.

During the processes described in this procedure attention must be paid to avoid the damages listed below:

- contamination (both particular and molecular)
- scratches on the surfaces/coatings
- mechanical damages in the foils/groundings

As the integration is performed in two major steps, the respective chapter is split up in two main parts.

- the first part describes the installation of attachments and bonding leads to the structure
- the second part describes the integration of the AAE MLI blankets to the structure

This document is property of AUSTRIAN AEROSPACE Ges.m.b.H.

1.3 ACRONYMS

AAE . Austrian Aerospace GmbH
A/R .. as required
acc. .. according
AIV .. Assembly, Integration, Verification
CSL .. Configuration Status List
CFRP .. Carbon Fiber Reinforced Plastic
C/W ... Clip Washer
DC .. Direct Current
DIL .. Deliverable Items List
EOL ... End of Life
e.g. .. for example
etc. .. and so on
Fig. ... Figure
GN_2 .. Gaseous Nitrogen
HP .. Hewlett Packard
ICD ... Interface Control Document/Drawing
i.e. .. this is
IPA .. Isopropanol
K .. Kelvin
LN_2 .. Liquid Nitrogen
mil .. 0.001 inches
MLI .. Multi Layer Insulation
NA .. not applicable
NCR .. Non-Conformance Report
NVR .. Non Volatile Residue
NRB ... Non-Conformance Review Board
PA .. Product Assurance
p.a. .. pro analyse
para ... Paragraph
ppm .. Parts Per Million
PSA .. Pressure Sensitive Adhesive
QA ... Quality Assurance
RD ... Reference Document
ref .. reference
RH ... Relative Humidity
SGP ... Stuctural Grounding Point
S/O ... Stand-Off
TBC ... To be confirmed
TBD ... To be determined
TH ... Thermal Hardware
typ. ... typical
US ... Ultrasonic
UV ... Ultra Violet
VDA .. Vacuum Deposited Aluminium

This document is property of AUSTRIAN AEROSPACE Ges m.b H.

2. DOCUMENTS

The following documents form part of this document to the extent specified here-in

In the event of a conflict between this document and the Applicable Documents (AD), the AD shall have the precedence. In the event of a conflict between this document and a Reference Document (RD), this document shall have precedence.

All documents referenced hereafter as ADs and RDs are valid in their latest issue.

2.1 APPLICABLE DOCUMENTS

AD1	QSTD-QPRC-3031-AAE	Handling Procedure for Thermal Hardware
AD2	-	Cleanroom Regulation for the applicable Integration Facility

2.2 REFERENCE DOCUMENTS

RD1	EPOS	Process management system of AAE with all process documents integrated
RD2	QSTD-MPRC-3033-AAE	Vorschrift zur Superisolationsfertigung, Manufacturing Procedure for MLI (AAE internal procedure)
RD3	QSTD-MPRC-3014-AAE	Reinigung in der Hi-Rel Fertigung; Cleaning of parts (AAE internal procedure)
RD4	QSTD-QLST-4013-AAE	Checklist for Inspection of Thermal Hardware Blankets (AAE internal procedure)
RD5	QSTD-QPRC-2009-AAE	Non Conformance Reporting System (AAE internal procedure)
RD6	FED-STD-209E	Cleanroom and Work Station Requirements, Controlled Environment
RD7	ECSS Q-70-26A	Crimping of high-reliability electrical connections

This document is property of AUSTRIAN AEROSPACE Ges.m.b.H

3. RESPONSIBILITIES

The following responsibilities are defined (in accordance with AAE Integrated Management System - RD1):

Note: Below responsibilities only apply if AAE personnel is performing the integration. In case that customer personnel performs the integration the customer responsibility rules shall apply.

Design [B30] – Thermal Hardware System Ingenieur

- Definition of detailed integration instructions (see forms/examples in ANNEX A:)
- Definition of bonding instructions (see forms/examples in ANNEX B:)
- Definition of integration sign-off sheets (see forms/examples in ANNEX C.)
- Definition of any open work tasks (see forms/examples in ANNEX D:)
- Definition of hardware to be integrated (see forms/examples in ANNEX E:)

Manufacturing [B40] – Operator for Thermal Hardware

- Check for completeness & compilation of all hardware (acc. engineering) to be integrated
- Handling of hardware according applicable procedures
- Performing the integration of the thermal hardware attachments in accordance with this and other applicable procedures
- Performing the integration of the thermal hardware blankets & foils in accordance with this and other applicable procedures
- Generation of NCRs, if any
- Performing repair of the thermal hardware blankets & foils in accordance with this and other applicable procedures, if necessary
- Dokumentation of the performed integration by filling in the applicable sign-off sheets
- Dokumentation of any deviations from this procedure and accompanying definitions

This document is property of AUSTRIAN AEROSPACE Ges.m.b.H.

4. PRE-CONDITIONS

The following Pre-Conditions apply for all operations with Thermal Hardware. Therefore they are listed prior to the description of the actual procedures

4.1 PERSONNEL

The work described in this document shall only be performed by experienced personnel or at least under supervision of experienced personnel. The cleanroom procedures of the relevant cleanroom must be followed and the use of clean gloves as described in para. 4.4 is mandatory.

4.2 APPLICABLE CLEANLINESS CONDITIONS

All operations have to be carried out in a cleanroom with at least class 8 acc. EN ISO 14644-1 (comparable to class 100.000 of RD6)

4.3 APPLICABLE ENVIRONMENTAL CONDITIONS

For short term laying down blankets / foils which are not in use, sufficient horizontal areas (i.e. tables, boards, shelves etc.) shall be provided. In order to avoid scratches on external surfaces, those tables shall be covered by clean, clear Mylar foils or equivalent.

	required
Temperature:	22° C ± 3° C
Relative Humidity:	40 % ÷ 60 %

Table 4-1: Environmental Conditions

This document is property of AUSTRIAN AEROSPACE Ges.m.b.H.

4.4 TOOLS AND EQUIPMENT

- Adhesive bonding Tools
- Disposable wipers or lint-free cloth: M-WipeTX502 or similar (organic contaminant content < 25 ppm)
- Isopropyl-alcohol or Acetone cleaning fluid: 'pro-analyse' quality or NVR < 2 ppm
- Cleanroom clothing (contaminated clothing is to be removed & laundered before re-use)
- Protective goggles
- Gloves: only clean lint-free gloves are allowed. Latex gloves are used during manufacture and their use is recommended. Use of gloves is however mandatory. Contaminated gloves must be replaced by new ones.
- Metal box (or other material not affected by adhesive mixture)
- Spatula for mixing and application of adhesive
- Tables in sufficient number and sizes with approved working surfaces
- Cleanroom approved marker pen
- Abrading equipment: Sandpaper 120, 360 or Scotchbrite
- Vacuum cleaner
- Hollow punch as shown in Figure 4-1, ∅ TBD mm (A/R).
- Dry filtered GN_2 (0,3 µm filtered; technically clean)

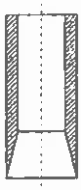

Figure 4-1: Hollow punch (typ.)

4.5 MATERIAL AND HARDWARE

- Structural adhesive systems according bonding instructions (see ANNEX B:)
- AAE delivered MLI blankets
- PSA Tapes (9460, 966, 9703) as needed according detailed instructions
- Other Tapes as needed according detailed instructions
- 1 mil Clear Clean Mylar
- Polyethylene (outer packing)
- Dessicant with humidity indication: DIN 55473
- Flashbreaker Tape or equivalent non-residual tape
- Structure samples for adhesive bonding samples

5. CLEANING

5.1 SAFETY CONSIDERATIONS

When using Isopropanol or Acetone as cleaning agent, it is essential that personnel follow the safety requirements of the suppliers safety data sheets exactly. Protective equipment (e.g clothing, gloves etc.) must be used

5.2 CLEANING PROCESSES

The cleaning of the delicate hardware has to be performed with utmost care. The relevant handling procedure (AD1) has to be followed.

Cleaning shall only take place in an environment as specified in para. 4.2.

Cleaning shall not degrade thermo-optical properties of the hardware and shall not cause scratches on the surface.

5.2.1 Cleaning of Thermal Blankets and Foils

5.2.1.1 Cleaning with Cleaning Solvent

Isopropanol as specified in para. 4.4 shall be used as cleaning solvent for cleaning of thermal blankets and foils.

Note: Isopropanol must not be diluted with any other liquid.

Cleaning of blankets/foils shall be done with use of a disposable wiper or lint-free cloth (as specified in para. 4.4) which is to be soaked and rinsed in Isopropanol prior to use.

Organic contaminants shall be removed by lightly touching the blanket/foil with firstly a soaked wiper and secondly a dry wiper. Care should be taken, that during the cleaning process no solvent excessively comes into the perforation holes of the foils.

Note: Do not wipe contaminated area with excessive force, because this could cause scratches on the surface.

The blanket/foil shall be allowed to stand for approx. 5 minutes to ensure full evaporation of the remaining solvent, before being re-used.

This document is property of AUSTRIAN AEROSPACE Ges.m.b.H

5.2.1.2 Cleaning with GN_2

Finished blankets shall be checked for particulate contamination

If seen necessary, particles shall be removed by means of a jet of compressed GN_2 and/or careful vacuuming.

Note: Cleaning with jet of GN_2 must be employed with utmost care.

The following pre-cautions have to be taken, if this cleaning method is selected:

- no unprotected blankets or other contamination sensitive hardware shall be located in the vicinity of the blanket to be cleaned, since contamination of these items may result
- only the outer surface shall be blasted with GN_2; care shall be taken to avoid that the jet of compressed GN_2 effects the internal layers of the blanket
- avoid scratching of surface by dust during cleaning
- clean hardware only in one direction to avoid re-contamination of blanket

5.2.2 Cleaning of Bonding Leads

If bonding leads are contaminated, wipe them thoroughly with a disposable wiper soaked in Isopropanol.

Note: As bonding leads of blankets often run near a perforated inner foil, care should be taken that no solvent excessively *comes into the perforation holes of the foil.*

Care should also be taken, that during the cleaning process no damage of the connection to the blanket itself occurs.

5.2.3 Cleaning of Small Parts

Stand-offs, clip washers, grounding washers etc. have been cleaned before their delivery. If contamination occurs, a replacement shall be considered, as spare parts are available in most cases.

If cleaning of such parts is decided, these parts shall be cleaned by means of an ultrasonic cleaning bath (e.g. according to RD3 or similar procedure). This process has to be performed in a safe distance to blankets, foils, etc.

5.3 INSPECTION AND DOCUMENTATION

After performing cleaning, a visual inspection has to be performed to verify that visibly clean condition of the hardware has been achieved.

After delivery each cleaning process has to be recorded in the relevant Historical Record of the Blanket/Foil.

This document is property of AUSTRIAN AEROSPACE Ges.m b H.

6. REPAIR

This chapter describes the necessary steps to be undertaken for repair in case of damaged thermal hardware. Information/criteria applicable for repair of MLI blankets in general as well as additional information for detailed repair methods are provided.

6.1 REPAIR CRITERIA

The following criteria are applicable for repair of MLI blankets:

- Whenever a damaged layer of a blanket/foil or a referred part (e.g. attachment provisions, electrical bonding provisions etc.) has to be repaired then only repair material shall be used, which consists of a material similar to that of the material being repaired.

Note. *Kapton tape (with or without coating pending damaged layer characteristics) can always be used for repair of a damaged layer (i.e. Kapton and Mylar foils).*

Never use Mylar foils for repair of Kapton foils!!!

- Kapton tape used for repair shall always be attached on non-space side if possible.

6.2 REPLACEMENT CRITERIA

In order to enable decision if a blanket can still be repaired or has be to be re-manufactured, several criteria have to be taken into account.

In case of the following a blanket shall be re-manufactured

- Tears in a damaged outer layer exceed length of 150 mm.
- Holes in a damaged layer exceed Ø20 mm.
- Total area of repair material exceeds 10 % of total blanket area
- One or more layers are damaged in such a way, that the required mechanical/thermal/electrical properties cannot be reached, and the respective layers cannot be replaced.
- Contamination level of blanket is that high, that required thermal/electrical properties cannot be reached and local repair or cleaning is impossible.
- Grounding point repair of grounding point is impossible.

Note: *Criteria listed above shall be understood as guideline for replacement of blanket/foil.*

In general re-manufacturing is needed in all cases where unacceptable mechanical/thermal degradation can be expected or is possibly to be expected even after (mechanical) repair.

Final decision has always to be made via NRB.

6.3 DETAILED REPAIR METHODS

In addition to the general procedures described above, this para. contains information about possible repair methods for damaged blankets, or referred parts.

6.3.1 Tears in Blankets

Tears in blanket/foil are repaired as follows:

- Punch crackstopper hole (Ø3 mm) at end of tear.
- Clean application area of repair tape using Isopropyl-alcohol, if necessary (i.e. when area contaminated in a way that good adhesion of tape cannot be guaranteed).
- Close tear with repair tape

Note: Overlap at end of tear shall be ≥ 10 mm.

Repair tape only needed on one side (non-space side, if possible).

- If a tear reaches a stand-off hole, the stand-off hole has to be reinforced with a ring of repair tape (in order to avoid punching of new stand-off hole).

6.3.2 Holes in Blankets

Repair method shall be the same as described in para. 6.3.1 for the repair of tears.

Note: If hole exceeds Ø10 mm, it has to be repaired on both sides of the foil!

6.3.3 Repair tapes

The following rules are applicable for the type of repair tape to be used.

Repaired foil	Repair tape to be used	Remark
foils of the inner package (thin Mylar or Kapton foils)	1 mil plain Kapton with PSA	
Outer layer (visible layer)	outer layer material with PSA	orientation of coatings (VDA, etc.) shall be the same as of the repaired foil.

6.3.4 Contamination of Blanket

If a blanket/foil is contaminated, try to clean respective area as described in para.5.2.1.1 using Isopropyl-alcohol

6.3.5 Attachment Replacement

Attachments (Stand-offs, Clipwashers and Velcros) have to be replaced, if they are destroyed or damaged in a way that their mechanical performance cannot be guaranteed anymore

6.3.5.1 Clip Washers

If the number of clip washer mounting/dismounting cycles exceeds 20, clip washers need to be re-inspected for proper performance in order to support the decision for further use.

In case that it cannot be ensured that the clipwashers mounting/dismounting cycles have not exceeded 20 cycles, at least a visual inspection on random samples is mandatory prior to launch/test.

6.3.5.2 Velcros

If the number of velcro mounting/dismounting cycles exceeds 10, velcros need to be re-inspected for proper performance in order to support the decision for further use.

In case that it cannot be ensured that the velcro mounting/dismounting cycles have not exceeded 10 cycles, at least a visual inspection on random samples is mandatory prior to launch/test.

Velcros have to be replaced according to following repair method:

- Cut sewing yarn with scissor
- Remove Velcro
- Apply new velcro by using the same type and application procedure according to RD2.

6.3.6 Electrical Bonding

6.3.6.1 Repair of Bonding Lead

If the bonding lead is damaged between the blanket/foil grounding point and the stress relief tape, a new grounding point has to be applied according to procedures described in the following para.

In any other case the bonding lead has to be cut off at the damaged location and a new connector/shrink sleeve has to be applied. The connector shall be crimped in accordance with RD7.

This document is property of AUSTRIAN AEROSPACE Ges.m.b.H.

6.3.6.2 Repair of Grounding Points

Whenever a grounding point is damaged (i.e. damage of crimped connection between bonding lead and grounding point), a new grounding point has to be applied on the blanket.

If an additional grounding point has to be applied on a blanket, the following procedure has to be observed:

- Cut off bonding lead of damaged grounding point as close as possible to stress relief tape.
- Open tongues of outermost layer at new grounding point location to the minimum extent necessary for placing grounding washers.
- Open inner package of MLI
- Apply additional grounding point according RD2.
- Close tongues of outermost layer around grounding point.

Note. *For blankets carrying a betacloth outermost layer it has to be observed, that one of the grounding washers touches a graphite yarn of the betacloth*

Note. *Functional requirements of the new grounding point have to be measured and recorded in the relevant historical record – the measurement to be conducted shall be a pin-to-pin resistance measurement between different grounding leads of the same blanket. Acceptance of exceeding shall be decided on case by case basis via NCR. The requirement can be found in the blanket inspection sheets in the relevant delivery documentation.*

6.4 DOCUMENTATION

Each repair performed has to be covered by an NCR.

Each repair has to be recorded in the relevant Historical Record of the blanket with reference to the respective NCR. The amount of repair (e.g length, % of total blanket area, etc.) has to be noted.

New mass of repaired blanket has to be recorded in the relevant inspection record of the blanket (i.e. column "Mass" respectively column "Remarks").

Historical Record of blanket shall support the decision, if a blanket can still be repaired or if it has to be re-manufactured (e.g. total amount of linear repair etc.).

7. INTEGRATION OF ATTACHMENTS

This part of the document describes how the MLI attachments (i.e stand-offs, attachment supports, velcros) have to be installed to the structure

7.1 SPECIAL PRE-CONDITIONS

Sufficient working space shall be made available to the working personnel Where cleaning fluids are used, proper ventilation shall be ensured and water sources shall be within easy reach.

Note. As described above, proper cleanroom clothing and approved gloves must be worn during the following steps of this process.

7.2 BONDING OF STAND-OFFS

Note. As there will most probably exist several types of stand-offs, a strict routine is necessary to avoid adhesion of a stand-off to an incorrect position

To bond the stand-offs to the structure repeat the following paragraphs for all Stand-Offs.

Note. For each batch of adhesive a bonding sample with stand-offs and a relevant structure sample is necessary. The samples and the remaining adhesive mixture shall be kept for traceability reasons.

7.2.1 Position Marking

The positions where stand-offs shall be adhered to must be marked on the structure. This is performed using an approved pen or very light abrading at the positions according to applicable drawings. Then the Stand-Offs can be bonded to these marked positions.

7.2.2 Preparation of Stand-Offs

Note: Open packages in the presence of QA personnel!

Open the package containing the stand-off type which is due for bonding. If supplied by AAE, Stand-offs have been cleaned prior to packing into the plastic bags according to RD3.

However, if cleaning is necessary due to any event proceed according to RD3 or equivalent.

If not already delivered in abraded conditions all Stand-Off flanges (bonding areas) have to be abraded with sandpaper as per para 4.4 or equivalent.

Note:A vacuum cleaner must be used, if abrading is performed in a clean area

This document is property of AUSTRIAN AEROSPACE Ges m.b.H.

7.2.3 Substrate Preparation

Depending on the substrate, to which the stand-offs have to be bonded to, different procedures may be applicable. Roughening and subsequent cleaning has to be performed according to the relevant bonding instructions – see ANNEX B:

7.2.4 Adhesive Mixture

Depending on the adhesive to be used different mixture ratios, pot lifes and curing times have to be observed These parameters are defined in dedicated adhesive mixture records using the forms as described in ANNEX B: For each batch of adhesive a separate adhesive mixture record has to be filled.

7.2.5 Application of adhesive and stand-off

Depending on the adhesive to be used different bonding procedures have to be used. The applicable procedures are defined via the relevant bonding instructions – see ANNEX B:

7.2.6 Fixation for Curing

Fix the stand-off with one or two pieces of flashbreaker tape or an equivalent non-residual tape as per Figure 7-1 over the foot.

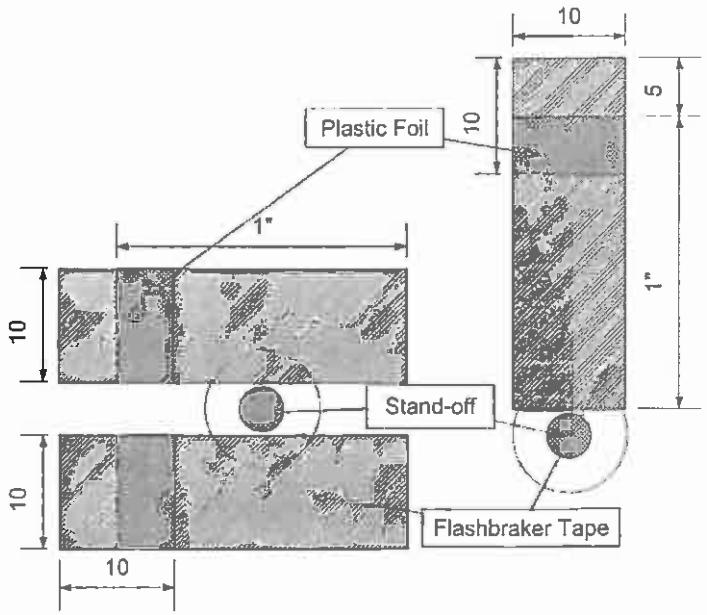

Figure 7-1: Fixation Tape for Stand-Off

7.3 BONDING OF VELCROS

Note: Each velcro attachment element consists of a loop part, which is already attached to the MLI blanket, and a hook part, which is to be bonded to the structure.

To bond the velcros to the structure repeat the following paragraphs for all velcros

Note: For each batch of adhesive a bonding sample with a velcro and a relevant structure sample is necessary. The samples shall be kept for traceability reasons.

7.3 1 Preparation of Velcros

Open the package containing the velcro hook tapes with the proper length.

The bonding area of each velcro hook part shall be cleaned with IPA, using a disposable wiper.

Note: Prior to performing any bonding activity at least 10 minutes shall be waited to allow for evaporation of cleaning agent.

7.3.2 Position Marking & Masking

The positions where velcros shall be adhered to must be marked on the structure. This is performed using an approved pen or very light abrading at the positions according to applicable drawings. Then the Velcros can be bonded to these marked positions.

Those areas, where no adhesive is planned to be applied, shall be covered by flashbreaker tape or an equivalent non-residual tape.

7.3.3 Substrate Preparation

Depending on the substrate, to which the stand-offs have to be bonded to, different procedures may be applicable. Roughening and subsequent cleaning has to be performed according to the relevant bonding instructions – see ANNEX B:

7.3.4 Adhesive Mixture

Depending on the adhesive to be used different mixture ratios, pot lifes and curing times have to be observed. These parameters are defined in dedicated adhesive mixture records using the forms as described in ANNEX B: For each batch of adhesive a separate adhesive mixture record has to be filled

7.3.5 Application of adhesive and Velcro

Depending on the adhesive to be used different bonding procedures have to be used. The applicable procedures are defined via the relevant bonding instructions – see ANNEX B:

8. INTEGRATION OF BLANKETS

8.1 GENERAL INSTRUCTIONS

8.1.1 Pre-Conditions

A sufficient number of tables shall be available, such that all blankets can be laid out without undue deformation. These tables shall have a Teflon working surface or any other approved working surface Clear clean Mylar shall be made readily available for covering of unpacked blankets. Any possible contamination source must be removed as far as particulate contamination as well as molecular contamination are concerned.

8.1.2 Preparation of Working Surfaces

The tables on the working surfaces shall be visible clean. If necessary they shall be pre-cleaned using Isopropyl-alcohol cleaning fluid. Working surfaces shall not be severely scratched nor shall any part protrude out of the flat surface to avoid blanket damage.

8.1.3 Blanket Identification

Each blanket carries its unique identification tag (Size: 38 mm x 24 mm). This tag is located on the backside of the blanket and looks as shown in the next figure:

Austrian Aerospace

Project	xxxxx		
Name	xxxxx		
Part.-No	xxxx	Issue	x
Doc.-No			
CI-No	xxxxxx	Model	x
Lay-up	xxxxxxx	S/N	xx

Figure 8-1: Marking Tag

8.1.4 Marking of Stand-Off Holes on the Blanket

As the S/O's are mounted to the structure with tolerances and the blankets have to be adapted slightly to the actual shape of the structure, the S/O holes are not punched during manufacturing but during integration. The positions of the holes for the S/Os are marked up on each template corresponding to a blanket (i.e carrying the same Part Number).

Note. The template must be legible if put on the spacecraft (i.e. not mirrored).

To obtain correct S/O positions on the template, attach the template to the spacecraft by hand at its intended location. If necessary shape the template to assume the optimum contour over the spacecraft and cross-check the marked-up S/O holes with the actual S/O positions If necessary mark up the actual positions with the cleanroom approved pen.

8.1 5 Installation of Structural Bonding Lead Parts

One Bonding Lead consists of two parts which are interconnected by means of a pin/socket connection. One part of this Bonding Lead is riveted to the blanket and the other part is connected to the structural bonding points.

The installation shall be done as follows:

- Locate the Structural Bonding Point referenced to in the applicable Integration Sign-off sheets (see example in ANNEX C:); the locations of these bonding points on the structure are provided in the applicable ICD.
- Attach the structural bonding lead parts to their corresponding Bonding Point.
- Torque bolt with 0,8 Nm + running torque.
- If the Structural Bonding Point does not provide a self-locking thread then fix the Screw head/Nut by a point of adhesive (e.g. EC2216 or appropriate) to the structure
- Fix the routing with patches of plain Kapton tape (1 inch x 1 inch), taking care, that this routing does not cross over detachable parts of the structure.

The structural reference for each blanket bonding point is given in the applicable Integration Sign-off sheets (see example in ANNEX C:)

8.1.6 Punching of Stand-Off Holes into the Blankets/Foils

Put the relevant template onto a clean table. Punch the marked holes into the template by using a hollow punch, which is 1 mm larger in diameter than the S/O shaft. Attach the template to the Spacecraft again and verify, that the holes match the S/Os.

Repeat para. 8.1.4 if necessary to obtain correct template fit.

This document is property of AUSTRIAN AEROSPACE Ges m b.H.

When template fits to the Spacecraft/Instrument, unpack the blanket bearing the same Part Number as the template (compare Part Number on Marking Tag with number on template) and put it onto the working surface. Apply the template with the correctly punched S/O holes on the blanket and align with the most important geometrical shape (i.e. Cutout, Outer Envelope). Mark S/O positions with the cleanroom approved pen.

Note: *Before punching the S/O holes, verify the proper condition of the hollow punch. The hollow punches' cutting edge must be without any cracks or burrs. For an optimum punching result the punch must be sharpened frequently and several spare tools should be available.*

Punch the S/O holes using a hollow punch, which is 1 mm larger in diameter than the S/O shaft.

8.1 7 Attachment of Clip Washers

The Clip Washers must be applied very carefully to avoid undue force on the S/O's. Clip-Washers shall be applied as shown in the following figure:

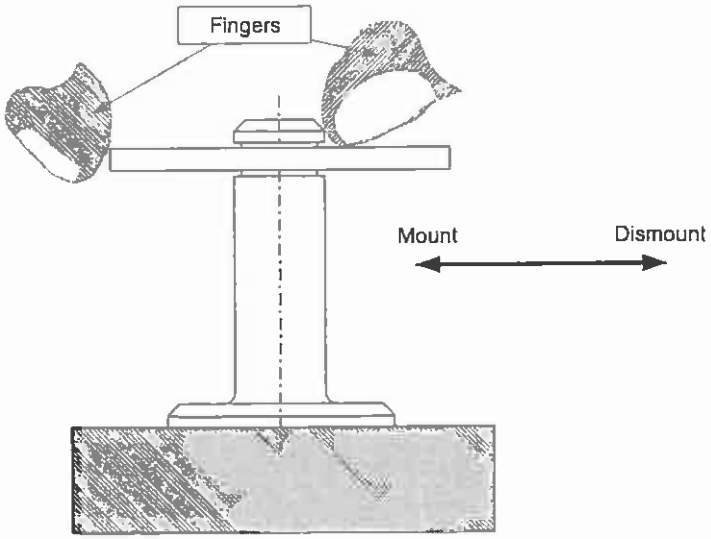

Figure 8-2: Clip Washer Attachment

All Clip Washers shall be applied such, that the Blankets nicely fit to the structure – i.e. the blankets shall neither be compressed nor have a gap to the structure larger than necessary.

8.1.8 Attachment of Blankets and Foils to the Structure

The attachment of the blankets to the structure is a very delicate process und should therefore be performed by experienced personnel (or at least under supervision of experienced personnel) and very carefully.

Apply a blanket to the structure and adjust to its contour where necessary. Apply Clip-Washer as described in para. 8.1.7 above. If clearance between thermal blankets/foils and the structure is required, Clip-Washers can be attached on the S/Os underneath the blankets (Some S/Os have several grooves) to hold the blankets in position

Removal of a Blanket is the reverse procedure.

Note: Before removal of a blanket verify,

- *that all overlaps are free*
- *all Clip-Washers have been removed*
- *all bonding leads have been disconnected*
- *all layers of the blanket have been detached from the stand-offs*

so to avoid damage of the blanket. This process could require the removal of another blanket first before removing the intended blanket.

8 1.8 1 Opening of Velcros

When opening blanket overlaps, which are closed by means of velcros, the following procedure has to be strictly followed in order to avoid any damage on the interfacing blankets (see Figure 8-3)

⇨ grap the first part of the velcro connection (either hook or loop part)

⇨ press down the opposite part of the velcro connection and peel the connection apart carefully.

⇨ **ATTENTION**: Never open the connection by pulling on either part of the blanket, but always peel the parts apart by grapping both parts of the velcros!!

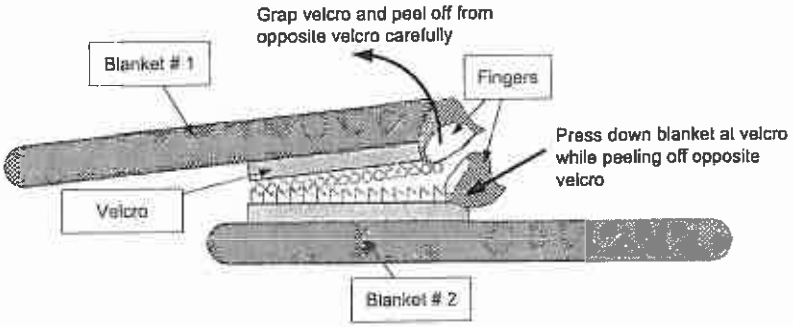

Figure 8-3: Opening of Velcros

8.1.9 Overlapping Rules

If not otherwise defined in and thus superseeded by the relevant project specific instructions, the following overlapping rules apply:

The standard overlap design is the "single" overlap as shown in Figure 8-4. Overlapping of 3 and more MLI has the same principle as overlapping with 2 MLI.

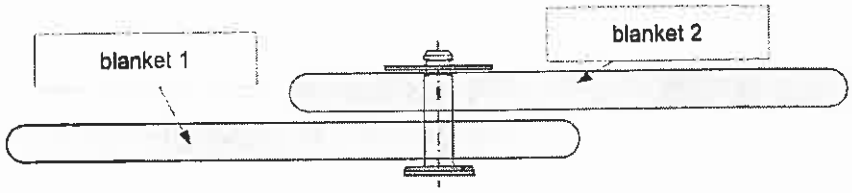

Figure 8-4: Single Overlap

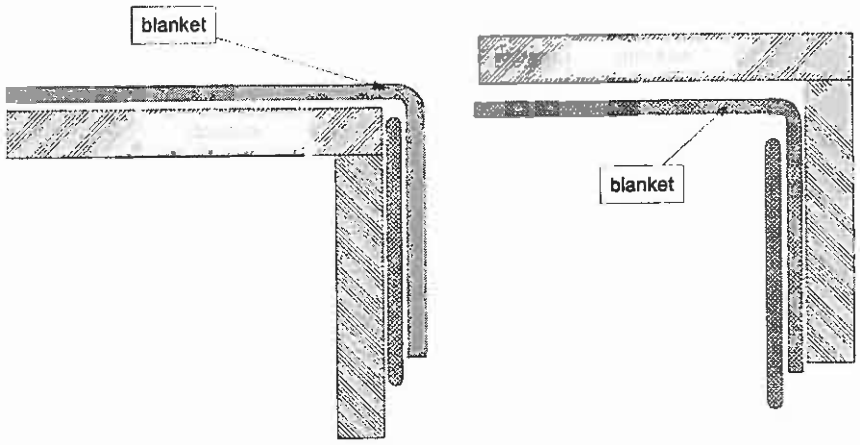

Figure 8-5: Overlapping at Corners

8.1.10 Closure of Blanket Overlaps

If seen necessary during final inspection, some blanket overlaps shall be partially closed to avoid additional thermal losses (see Figure 8-6).

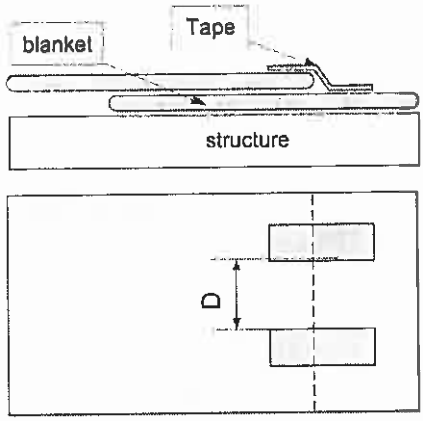

Figure 8-6: Closing of Blanket Overlaps using Tapes

Note: If no other distance "D" is specified for the individual case in the respective special instructions for each blanket, then this distance shall be 150 mm

The typical size of the tape is 50 x 25 mm.

The tape to be used shall be made of outer layer material except stated otherwise in the special instructions

8.1.11 Connection of Bonding Leads

One Bonding Lead set consists of two pieces. One part is riveted to the blanket while the other part is attached to the respective structural bonding point.

After performing the tasks of para. 8.1.5 the structural parts of the bonding leads are ready for mating of blanket part/structural part of the bonding lead. After connection of all bonding leads of the MLI blanket, the electrical resistance between the rivet of one bonding point and its structural reference shall be measured and recorded.

Note: Before flight, this Pin/Socket connection must be secured against accidental demating with a piece of 1 mil plain Kapton 966 or 9460 PSA tape, wound around the connector (see Figure 8-7).

Securing of connectors with 1mil Kapton / PSA Tape (25,4 x 25,4 mm):

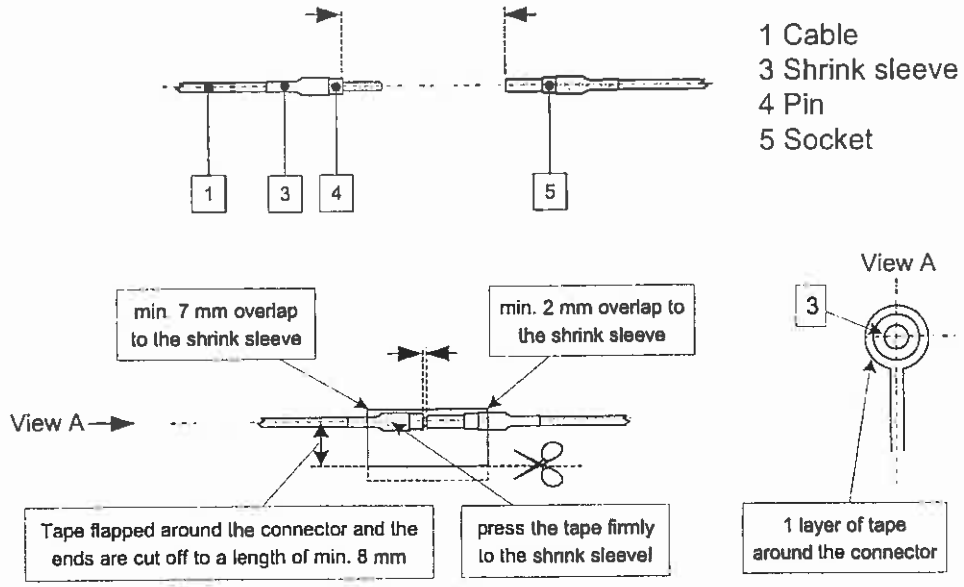

Figure 8-7: Securing of bonding lead connections

8.1 12 Open Work

A number of cut-outs, slits etc. might have to be made during integration (this is stated as "open work" in the relevant delivery documents respectively in the detailed instructions).

The general proceeding is as described in para. 8 above (i.e. taking the relevant contours, slits etc. onto the template and then introducing them into the blanket/foil).

Note: All information given in para. 8.2 have to be taken into account.

This work is to be performed by AAE personnel or at least in presence of an AAE representative to ensure that the same manufacturing standards/methods are applied that were used during the production of this hardware.

8.1 13 Documentation

As the stand-off locations on the templates are only indicating the approximate position, the actual position has only to be clearly marked on the reduced size template copies when it is more than 10 mm away from its nominal position.

The final stand-off position has always to be marked on the template used for on-site modification of the blanket (see para. 8.1.6)

All other modifications of the hardware (slits, cut-outs, tapes etc.) must be clearly marked on the production templates provided together with the blankets as well as on the reduced size copies of the templates, which are provided with the applicable delivery documents.

All hardware items modified during integration (e.g. by making cut-outs, finishing bonding leads etc.) shall be weighed. The new weight shall be recorded in the relevant inspection record of the blanket (i.e. column "Mass" respectively column "Remarks").

For each MLI blanket / foil the electrical resistance between the rivet of one bonding point and its structural reference shall be checked/measured for compliance to the applicable requirement and recorded in the applicable Integration Sign-off sheets (see example in ANNEX C:)

Each mounting/removal of an MLI blanket has to be documented in the „Historical Record" sheet of the relevant delivery documents.

This document is property of AUSTRIAN AEROSPACE Ges.m.b.H.

8.2 SPECIFIC INSTRUCTIONS

Any instructions, which are specific to a project will be provided in detailed instructions, which shall be considered as an amendment to this generic procedure and which are to be part of the delivery documentation.

These detailed instructions will include

1 Special instructions for integration, if any applicable to the project. These special instructions shall clearly identify and describe

- ⇨ Special integration sequence: any sequence of blanket mounting or dismounting to be especially observed during blanket integration
- ⇨ Special overlapping rules: any overlapping rules, which have to be especially considered and are not described either in para. 8.1.8.1 above or in the applicable General Arrangement drawings.
- ⇨ Special integration requirements: any measures which have to be especially considered.

2. Bonding instructions for attachment bonding (according ANNEX B:)
3. Any Open Work referring to para. 8.1 12 above (according ANNEX D:)
4. General Arrangement Drawing for the MLI blankets (example see ANNEX A.)
5. Blanket Integration Sign-off Sheets (according ANNEX C:)
6. List of hardware to be integrated (according ANNEX E:)

ANNEX A: GENERAL ARRANGEMENT DRAWING (EXAMPLE)

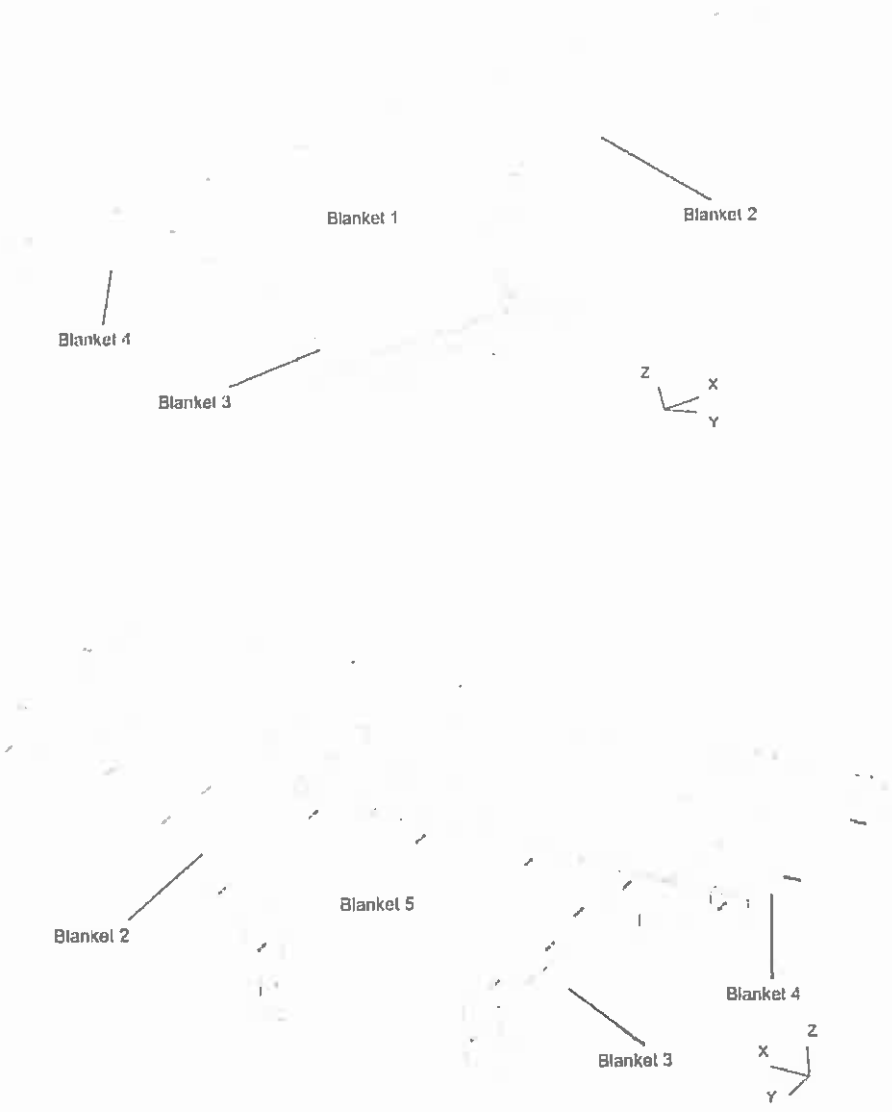

Figure 8-8: Example for General Arrangement Drawing

ANNEX B: BONDING INSTRUCTIONS

Different adhesives and applicable procedures might be used for bonding of different types of attachments.

In case that AAE is responsible for the bonding of the attachments, the definition of the adhesives and the applicable procedures to be used has to be included in the applicable detailed instructions, which are contained in the relevant sections of the delivery documents.

The tables / forms as shown hereafter shall be used in the applicable detailed instructions.

ADHESIVE	FORESEEN USE	APPLICATION PROCEDURE
SUBSTRATE	**SUBSTRATE PREPARATION**	**SUBSTRATE CLEANING**

Table 8-1: Form for Bonding Instructions

ADHESIVE	FORESEEN USE	APPLICATION PROCEDURE
Scotchweld EC 2216 B/A	Bonding of Stand-offs	QSTD-MPRC-3008-AAE
SUBSTRATE	**SUBSTRATE PREPARATION**	**SUBSTRATE CLEANING**
CFRP	to be roughended by means of a glase-fibre pencil. *Note: In case of CFRP substrate the grinding must be performed carefully, not to damage the CFRP fibres. This abrasion shall only give a good bonding surface and is not intended to achieve any "electrical" contact.*	Clean the surface, where the Stand-off will be bonded to and and the foot of the Stand-off with Acetone and disposable cleaning paper a second time.
Aluminium	Aluminium substrates need not to be abraded if the surface treatment provides a proper bonding surface (to be checked on case-by-case basis).	same as for CFRP

Specimen

For each adhesive batch used an "Adhesive Mixture Record" as shown below has to be filled

ADHESIVE MIXTURE RECORD	No. (JJ / MM / DD / No.): / / /

Adhesive (Part A):		Color:	
Adhesive (Part B):		Color:	
Lot No. (Part A):			
Lot No. (Part B):			
AAE-Ref. (Part A): Colli:		, EoL	
AAE-Ref. (Part B): Colli:		: EoL	
Project-Code:	Reference Doc..		
Mixture Ratio by Weight:	Part A : Part B =		
Used balance (type, S/N):		, next cal..	
Part A:	**nominal:** g	**actual:**	g
	K = 1 / Mixture Ratio		
Part B:	**nominal:** (A_{act} x K =) g	**actual:**	g
Time / Start:		**Mixture Duration:**	min.
Temperature:	° C	**Humidity:**	% r. H.
Pot Life:		**Time of Last Bonding:**	
Minimum Cure Time at room-temperature:			
Cure-Time before Loading (Cure at 25° C):			
Bonding Samples:	according to:		
	Required: 1 pcs.	**actual:**	pcs
Samples marked with Record No. and Sample-Serial No.:		**performed by** _____	
Remarks:			

Location:	Date:	Performed by:	Checked by:

Table 8-2: Form for Adhesive Mixture Record

ADHESIVE MIXTURE RECORD	No. (JJ / MM / DD / No.): 05 / 03 / 08 / 01

Adhesive (Part A):	SCOTCH-WELD 2216 A	Color: grey	
Adhesive (Part B):	SCOTCH-WELD 2216 B	Color: white	
Lot No. (Part A):	16 99 65		
Lot No (Part B):	16 99 65		
AAE-Ref. (Part A):	Colli: 2728	; EoL: 19. 10. 06	
AAE-Ref. (Part B):	Colli: 2728	; EoL: 19. 10. 06	
Project-Code:	SMOS	Reference Doc.:	SO-UM-AAE-TCSH-0001
Mixture Ratio by Weight:	Part A . Part B = 7 : 5		
Used balance (type, S/N):	KERN CM 320-1	; next cal.: 28. 09. 05	
Part A:	nominal: 7 g	actual: 7,5 g	
	K = 1 / Mixture Ratio = 5 / 7 = 0,714		
Part B:	nominal: (A_{act} x K =) 5 g	actual: 5,4 g	
Time / Start:	15:15	Mixture Duration:	5 min.
Temperature:	22 °C	Humidity:	RR % r. H.
Pot Life:	max. 90 min.	Time of Last Bonding:	15:40
Minimum Cure Time at room-temperature:	8 h		
Cure-Time before Loading (Cure at 25° C):	24 h		
Bonding Samples:	according to:		
	Required: 1 pcs.	actual: 1 pcs	
Samples marked with Record No. and Sample-Serial No..		performed by	KOK
Remarks:			

Location:	Date:	Performed by:	Checked by:
AAE	08. 03. 05	KOK	KOK

This document is property of AUSTRIAN AEROSPACE Ges.m.b.H

ANNEX C: INTEGRATION SIGN-OFF SHEETS

Several Integration steps have to be performed up to final integration of the blankets.

The general definition of the different steps of integration is applicable for all blankets and is therefore defined herein.

The definition of the blankets is project specific and has to be included in the applicable detailed instructions, which are contained in the relevant sections of the delivery documents.

The tables / forms as shown hereafter shall be used in the applicable detailed instructions.

ID	Blanket Name Blanket No. / issue	S/N	INTEGRATION STEPS									REMARKS
-1	Name Number/Issue	SN	§1 Attachments	S/O	C/W	floating S/O						
			Mounting									
			§2 Bonding leads	SGP ID	routed	Structure S/N	Blanket S/N	length	Connect	Secure	Resist.	
			Blanket BP1									
			Blanket BP2									
			§3 Blanket	fit-check	modified	holes	initial	overlap prelim.	overlap final	open work		
			Integration									

Table 8-3: Form for Integration Sign-off Sheet

Each entry in the integration sign-off sheet is explained hereafter for better understanding. An example of an integration sign-off sheet is provided herafter as well.

§ 1 „Attachments Mounting"

"S/O"	to be signed-off, when all stand-offs have been properly mounted to their supports according to instructions in the integration procedure
"floating"	to be signed-off, when all floating Stand-offs for the respective blanket have been mounted
"C/W"	to be signed-off, when the respective blanket has been finally integrated and it has been checked, that all clipwashers are mounted

§ 2 „Bonding Leads"

"SGP ID"	when the structure-side bonding lead for the blanket has been properly mounted to the structural grounding point, the unique structural grounding point ID (according applicable ICD) has to be to be filled-in for each blanket bonding point separately.
"routed"	to be signed-off, when the bonding lead has been properly routed on the structure for connection with its counterpart on the blanket
"Structure S/N"	the serial number printed on the shrink sleeve at connector side of the bonding lead connected to the structural grounding point has to be recorded
"Blanket S/N"	the serial number printed on the shrink sleeve at connector side of the bonding lead mounted on the blanket has to be recorded
"length"	the length of the bonding lead used for mounting on structural grounding point has to be recorded
"Connect"	to be signed-off, when the bonding lead has been initially connected with its corresponding structural counterpart
"Secure"	to be signed-off, when the bonding lead has been finally connected with its corresponding structural counterpart and secured
"Resist. "	the electrical resistance between the rivet of the bonding point and its structural reference shall be checked/measured for compliance to the applicable requirement and recorded This can either be a "YES/NO" measurement, which is confirmed by a ✓ or a measurement value pending the requirement.

This document is property of AUSTRIAN AEROSPACE Ges.m.b.H.

§ 3 „Blanket Integration"

"fit-check"	to be signed-off, when the corresponding blanket template has been fit-checked and modified, if needed, for a proper fit of the respective blanket.
"modified"	to be signed-off, when all modifications according the „open work" section, which are related to blanket modification, and all other necessary modifications for a proper fit of the respective blanket have been performed
"holes"	to be signed-off, when all holes for Stand-offs have been punched into the respective blanket
"initial"	to be signed-off, when the respective blanket has been initially integrated and found to fit properly
"overlap prelim."	For thermal or mechanical tests overlaps shall be closed as less as possible to fulfill its function, but to allow the removal of the Blanket without damage. To be signed-off, when when closure of overlaps has been performed acc. instructions in the detailed integration procedure for this purpose.
"overlap final"	For launch overlaps shall be closed as necessary to fulfill its function. After the final closure of the MLI Blankets, the removal (without damage) is very difficult. To be signed-off, when closure of overlaps has been performed acc. instructions in the detailed integration procedure
"open work"	to be signed-off, when all remaining open work according „open work" section, which is not related to blanket modification, (e.g. removal of protective layer) have been performed

The columns, which are left blank may be used for additional steps, which are seen necessary during integration.

The "REMARKS" column shall be used for any additional information considered necessary to be recorded (e.g. NCR number, etc.)

This document is property of AUSTRIAN AEROSPACE Ges.m.b.H

ID	Blanket Name Blanket No. / issue	S/N	INTEGRATION STEPS									REMARKS
-1	Blanket Front G3990-301-001-00/B	01	§1 Attachments	S/O	C/W	floating S/O						
			Mounting	✓	✓	✓						
			§2 Bonding leads	SGP ID	routed	Structure S/N	Blanket S/N	length	Connect	Secure	Resist.	
			Blanket BP1	SGP01	✓	1234	4568	800	✓	✓	0.20 Ω	
			Blanket BP2	SGP02	✓	2536	1254	900	✓	✓	0.15 Ω	
			§3 Blanket	fit-check	modified	holes	initial	overlap prelim.	overlap final	open work		
			Integration	✓	✓	✓	✓	✓	✓	✓		
-2	Blanket Skirt Right G3990-301-002-00/B	01	§1 Attachments	S/O	C/W	floating S/O						
			Mounting	✓		✓						
			§2 Bonding leads	SGP ID	routed	Structure S/N	Blanket S/N	length	Connect	Secure	Resist.	
			Blanket BP1	SGP02	✓	2358	7923	800	✓		✓	
			Blanket BP2	SGP03	✓	4789	1278	400	✓		✓	
			§3 Blanket	fit-check	modified	holes	initial	overlap prelim	overlap final	open work		
			Integration	✓	✓	✓	✓	✓				

Example

This document is property of AUSTRIAN AEROSPACE Ges m.b.H.

ANNEX D: OPEN WORK LIST

A number of cut-outs, slits etc. might have to be made during integration.

The definition of the open work tasks to be performed is project specific and has to be included in the applicable detailed instructions, which are contained in the relevant sections of the delivery documents.

The tables / forms as shown hereafter shall be used in the applicable detailed instructions.

Seq No.	Nomenclature	Drawing-/ Identification No.	Open		Reference Documents	Close-Out	
			Test	Work		Date	Sign
1							
2							

Table 8-4: Form for Open Work Definition

This document is property of AUSTRIAN AEROSPACE Ges.m.b.H.

Seq No.	Nomenclature	Drawing-/ Identification No.	Open Test	Open Work	Reference Documents	Close-Out Date	Close-Out Sign
1	Cut-outs for Feedhorn brackets to be adjusted after final adjustment of feedhorns.	G2820-400-000-11; S/N 03		x	SAR-AAE-MA-1001 iss. 2.0		
2	Protective Mylar cover to be removed prior to test	G2820-500-000-61, S/N 03		x	SAR-AAE-MA-1002 iss. 1.0		
3							
4							
5							
6							
7							
8							

example

This document is property of AUSTRIAN AEROSPACE Ges.m.b.H

ANNEX E: LIST OF HARDWARE TO BE INTEGRATED

The definition is project specific and has to be established for each individual project separately.

The tables / forms as shown hereafter shall be used for definition of the hardware.

The filled-in tables / forms have to be included in the applicable detailed instructions, which are contained in the relevant sections of the delivery documents.

An example of such a definition / listing is provided herafter as well.

Blankets/Foils

pcs.	*Description*	*Part No.*	*S/N*	*Remarks*

Attachment Hardware

pcs.	*Description*	*Part No.*	*Remarks*

Grounding Hardware

pcs.	*Description*	*Part No.*	*Remarks*

This document is property of AUSTRIAN AEROSPACE Gesmbh.

Blankets/Foils

pcs.	Description	Part No.	S/N	Remarks
1	Blanket Front	G3990-301-001-00/B	01	
1	Blanket Skirt Right	G3990-301-002-00/B	01	
1	Blanket Skirt Left	G3990-301-003-00/B	01	
1	Blanket Feedhorn Top	G3990-301-004-00/A	01	
1	Blanket Feedhorn Lower	G3990-301-005-00/A	01	
1	Blanket Subreflector	G3990-301-006-00/A	01	
1	Blanket Tower Lower	G3990-301-007-00/B	01	
1	Blanket Tower Upper	G3990-301-008-00/A	01	
1	Blanket Bracket Left	G3990-301-009-00/A	01	
1	Blanket Bracket Right	G3990-301-010-00/A	01	
1	Blanket Bracket Left Corner	G3990-301-011-00/A	01	
1	Blanket Bracket Right Corner	G3990-301-012-00/A	01	
1	Blanket Bracket Front	G3990-301-013-00/A	01	
1	Blanket Bracket Front	G3990-301-013-00/A	01	

Attachment Hardware

pcs.	Description	Part No.	Remarks
13	Stand-off Ø4-5	G1390-250-100-00/a	
26	Stand-off Ø4-9,5	G1390-250-300-00/a	
64	Clipwasher Ø4/Ø15	SKQ-V10220/Rev.1	

Grounding Hardware

pcs.	Description	Part No.	Remarks
22	Bonding Lead (l=800 mm), Typ 02	BL0800TS-T02	structural part
6	Bonding Lead (l=900 mm), Typ 02	BL0900TS-T02	structural part

Original

4. CERTIFICATES

Certificate of Conformance

This document is property of AUSTRIAN AEROSPACE Ges.m.b.H.

CERTIFICATE OF CONFORMANCE

ORDER REFERENCE:	Purchase Order Nr. 70423 dtd. 29.05.2007
EQUIPMENT:	ECAL Corner ZN TH
EQUIPMENT SPECIFICATION:	MS-PRO-0597-AAE Issue4
CI-NO:	-
MODEL / SN:	PFM
CLEANLINESS:	The delivered hardware has been visually inspected and was found to be visibly clean at delivery from AAE
REMARKS:	

These undersigned certify that apart from the deviations noted in the "REMARKS" box, the delivered equipment as per attached documentation is in conformity with the Customer Requirements.

NAME:	FUNCTION:	SIGNATURE:	DATE:
	Product Assurance		15/9/2008
	Project Manager		16/9/2008

5. HISTORICAL RECORD / LOGBOOK

This document is property of AUSTRIAN AEROSPACE Ges.m.b.H.

HISTORICAL RECORD DATA SHEET

Item: Blanket Ecal Corner ZNXNYN	Dwg.-No.: G4070-100-250-00	Issue: A	Model: PFM	Serial No.: 01

Company	Date	Event	Event Description	Remark / Report	Sign
AAE	Start: 08/2008 End: 08/2008	MANUFACTURE and INSPECTION	Manufacturing of Blanket and Blanket Inspection	acc. RTEM-TLS-0006-AAE /Iss. 1.0	see blanket inspection sheets
AAE	Start: End:	INTEGRATION	Initial Integration of Blanket	acc. RTEM_DP_0003_AAE /Iss. 1.0	see integration sign-off sheets
	Start: End:				
	Start: End:				
	Start: End:				
	Start: End:				
	Start: End:				
	Start: End:				
	Start: End:				

This document is property of AUSTRIAN AEROSPACE Ges.m.b.H

HISTORICAL RECORD DATA SHEET

Item: Blanket Ecal Corner ZNXNYP	Dwg.-No.: G4070-100-260-00	Issue: A	Model: PFM	Serial No.: 01

Company	Date	Event	Event Description	Remark / Report	Sign
AAE	Start: 08/2008 End: 08/2008	MANUFACTURE and INSPECTION	Manufacturing of Blanket and Blanket Inspection	acc. RTEM-TLS-0006-AAE /Iss. 1.0	see blanket inspection sheets
AAE	Start: End:	INTEGRATION	Initial Integration of Blanket	acc. RTEM_DP_0003_AAE /Iss. 1.0	see integration sign-off sheets
	Start: End:				
	Start: End:				
	Start: End:				
	Start: End:				
	Start: End:				
	Start: End:				
	Start: End:				

This document is property of AUSTRIAN AEROSPACE Ges.m.b.H

HISTORICAL RECORD DATA SHEET

Item: Blanket Ecal Corner ZNXPYN	Dwg.-No.: G4070-100-270-00	Issue: A	Model: PFM	Serial No.: 01

Company	Date	Event	Event Description	Remark / Report	Sign
AAE	Start: 08/2008 End: 08/2008	MANUFACTURE and INSPECTION	Manufacturing of Blanket and Blanket Inspection	acc. RTEM-TLS-0006-AAE /Iss. 1.0	see blanket inspection sheets
AAE	Start: End:	INTEGRATION	Initial Integration of Blanket	acc. RTEM_DP_0003_AAE /Iss. 1.0	see integration sign-off sheets
	Start: End:				
	Start: End:				
	Start: End:				
	Start: End:				
	Start: End:				
	Start: End:				
	Start: End:				

This document is property of AUSTRIAN AEROSPACE Ges.m.b.H

HISTORICAL RECORD DATA SHEET

Item: Blanket Ecal Corner ZNXPYP	Dwg.-No.: G4070-100-280-00	Issue: A	Model: PFM	Serial No.: 01

Company	Date	Event	Event Description	Remark / Report	Sign
AAE	Start: 08/2008 End: 08/2008	MANUFACTURE and INSPECTION	Manufacturing of Blanket and Blanket Inspection	acc. RTEM-TLS-0006-AAE /Iss. 1.0	see blanket inspection sheets
AAE	Start: End:	INTEGRATION	Initial Integration of Blanket	acc. RTEM_DP_0003_A AE /Iss. 1.0	see integration sign-off sheets
	Start: End:				
	Start: End:				
	Start: End:				
	Start: End:				
	Start: End:				
	Start: End:				
	Start: End:				

This document is property of AUSTRIAN AEROSPACE Ges.m.b.H

6. INTEGRATION SIGN-OFF SHEETS

ID	Blanket Name Blanket No. / Issue	S/N	INTEGRATION STEPS									REMARKS
-1	Blanket Ecal Corner ZNXNYN G4070-100-250-00	01	§1 Attachments	S/O	C/W	floating S/O						
			Mounting									
			§2 Bonding leads	SGP ID	routed	Structure S/N	Blanket S/N	length	Connect	Secure	Resist.	
			Blanket BP1									
			Blanket BP2									
			§3 Blanket	fit-check	modified	holes	initial	overlap prelim.	overlap final	open work		
			Integration									

ID	Blanket Name Blanket No. / Issue	S/N	INTEGRATION STEPS									REMARKS
-1	Blanket Ecal Corner ZNXNYP G4070-100-260-00	01	§1 Attachments	S/O	C/W	floating S/O						
			Mounting									
			§2 Bonding leads	SGP ID	routed	Structure S/N	Blanket S/N	length	Connect	Secure	Resist.	
			Blanket BP1									
			Blanket BP2									
			§3 Blanket	fit-check	modified	holes	initial	overlap prelim.	overlap final	open work		
			Integration									

This document is property of AUSTRIAN AEROSPACE Ges m b H

ID	Blanket Name Blanket No. / Issue	S/N	INTEGRATION STEPS									REMARKS
-1	Blanket Ecal Corner ZNXPYN G4070-100-270-00	01	§1 Attachments	S/O	C/W	floating S/O						
			Mounting									
			§2 Bonding leads	SGP ID	routed	Structure S/N	Blanket S/N	length	Connect	Secure	Resist.	
			Blanket BP1									
			Blanket BP2									
			§3 Blanket	fil-check	modified	holes	Initial	overlap prelim.	overlap final	open work		
			Integration									

This document is property of AUSTRIAN AEROSPACE Ges m.b H

ID	Blanket Name Blanket No. / Issue	S/N	INTEGRATION STEPS									REMARKS
-1	Blanket Ecal Corner ZNXPYP G4070-100-280-00	01	§1 Attachments	S/O	C/W	floating S/O						
			Mounting									
			§2 Bonding leads	SGP ID	routed	Structure S/N	Blanket S/N	length	Connect	Secure	Resist.	
			Blanket BP1									
			Blanket BP2									
			§3 Blanket	fit-check	modified	holes	Initial	overlap prelim.	overlap final	open work		
			Integration									

7. MIXTURE RECORDS

ADHESIVE MIXTURE RECORD	**No.** (JJ / MM / DD / No.): / / /

Adhesive (Part A):	**SCOTCH-WELD 2216 A**	Color: **grey**	
Adhesive (Part B):	**SCOTCH-WELD 2216 B**	Color: **white**	
AAE-Ref. (Part A):	Colli:	EoL:	
AAE-Ref. (Part B):	Colli: - " -	EoL: - " -	
Project Code:	Reference Doc.:		
Mixture Ratio (by weight):	Part A : Part B = 7 : 5		
Used balance (IDNr.):		; next cal.:	
Part **A**: **nominal** (7 g ± 2g):	**g**	**actual:**	**g**
Part **B**: **nominal:** A_{act} x 5 : 7 =	**g**	**actual:**	**g**
Environment: Cleanroom ☐ / Non-Cleanroom ☐ Temp.: ° C / Humidity: % r. H.			
Time / Start:	**Homogeneity of mixture:** ☐ (mixture duration: >10 minutes)		
Time of Last Bonding:	Pot Life: max. 90 min. ☐		
Minimum Cure Time at room-temperature:	8 h		
Cure-Time before Loading (Cure at 25° C):	24 h		

Bonding Samples: prepared according to procedure ☐

Structure samples available ☐ alternative Aluminium ☐

Samples marked with Proj. Code, Record No. and Sample-Serial No.: **performed by** _____

Bonded Items (ref. to General Arrangement):

Remarks:

Location:	Performed by:

8. OPEN WORK LIST

8.1 REMOVAL OF SILVER FEP TAPE ON ECAL RADIATOR

The ECAL radiator is covered by Silver FEP tape. This tape has to be removed locally to bond the stand-offs by proceeding the following steps:

- Cut out the Silver FEP tape by using a hollow punch. Positions acc. SECTION 10; Diameter: 12mm
- Remove remainders of PSA.
- Clean the open area by using isopropyl-alcohol.
- Abreading the surface of the open area by using Scotchbrite or sandpaper.
- Clean the open area by using isopropyl-alcohol again and wait a minimum of 10 minutes before starting the bonding.
- Bonding the stand-offs and make sure that the glue covers the open area between the stand-off flange and the tape.

Seq No.	Nomenclature	Drawing-/ Identification No.	Open		Reference Documents	Close-Out	
			Test	Work		Date	Sign
1							
2							
3							
4							

This document is property of AUSTRIAN AEROSPACE Ges m b H

9. BLANKET DRAWINGS

Qty.	*Description*	*Drawing No./Remarks*	*Ser. No.*	*Lay-up*
1	Blanket Ecal Corner ZNXNYN	G4070-100-250-00/A	01	RTE
1	Blanket Ecal Corner ZNXNYP	G4070-100-260-00/A	01	RTE
1	Blanket Ecal Corner ZNXPYN	G4070-100-270-00/A	01	RTE
1	Blanket Ecal Corner ZNXPYP	G4070-100-280-00/A	01	RTE

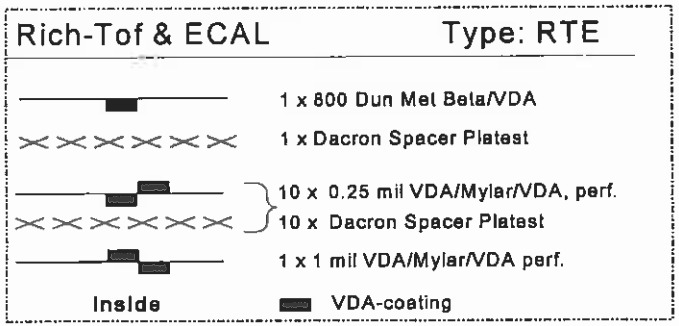

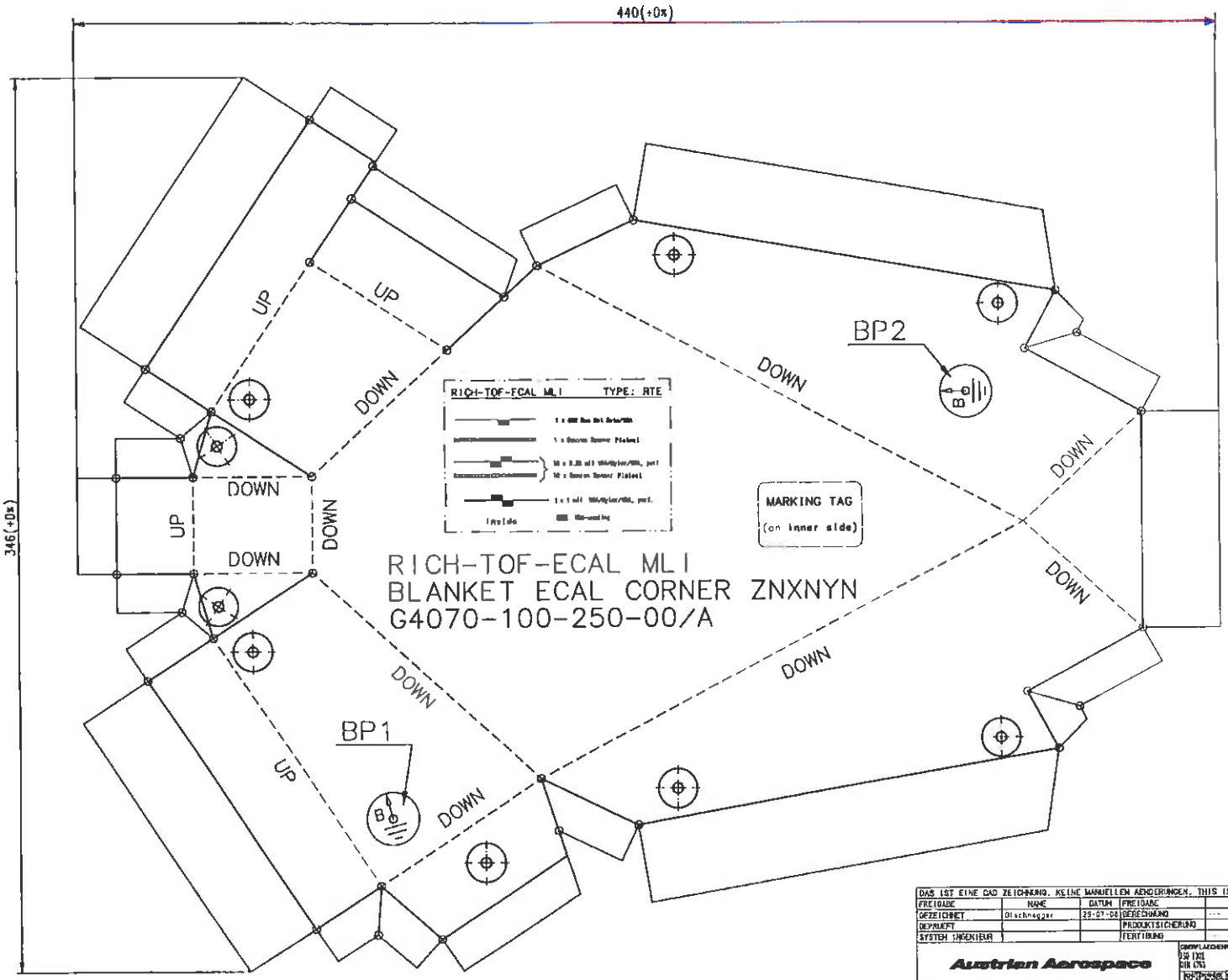

AAE-CADM
04. AUG. 2008
RECEIVED

A3 Copy of off. issue A

DAS IST EINE CAD ZEICHNUNG. KEINE MANUELLEN AENDERUNGEN. THIS IS A CAD DRAWING. NO MANUAL CHANGES.

	NAME	DATUM		NAME	DATUM
FREIGABE			FREIGABE		
GEZEICHNET	Dischnegger	29-07-08	BERECHNUNG	---	---
GEPRUEFT			PRODUKTSICHERUNG		
SYSTEM INGENIEUR			FERTIGUNG		

FREI: MASSTOLERANZ
GEN. TOLERANCE

Austrian Aerospace

OBERFLAECHENRAUHEIT/SURFACE FINISH DIN 4763

OBERFLAECHENBEHANDLUNG/SURFACE TREATMENT

H		
G		
F		
E		
D		
C		
B		
A	ISSUED	
	AENDERUNG	DATUM	NAME

MASSTAB/SCALE 1 : 1

ROHTEIL NR./RAWPART NO.

Blanket
Ecal Corner ZNXNYN

PROJECT: RICH TOF ECAL ITEM: ML

G4070-100-250-00

BLATT/SHEET 1
VON: 1

CAD SYSTEM: I-DEAS 12 NX Series m3

CADM-RELEASE FILE NAME:

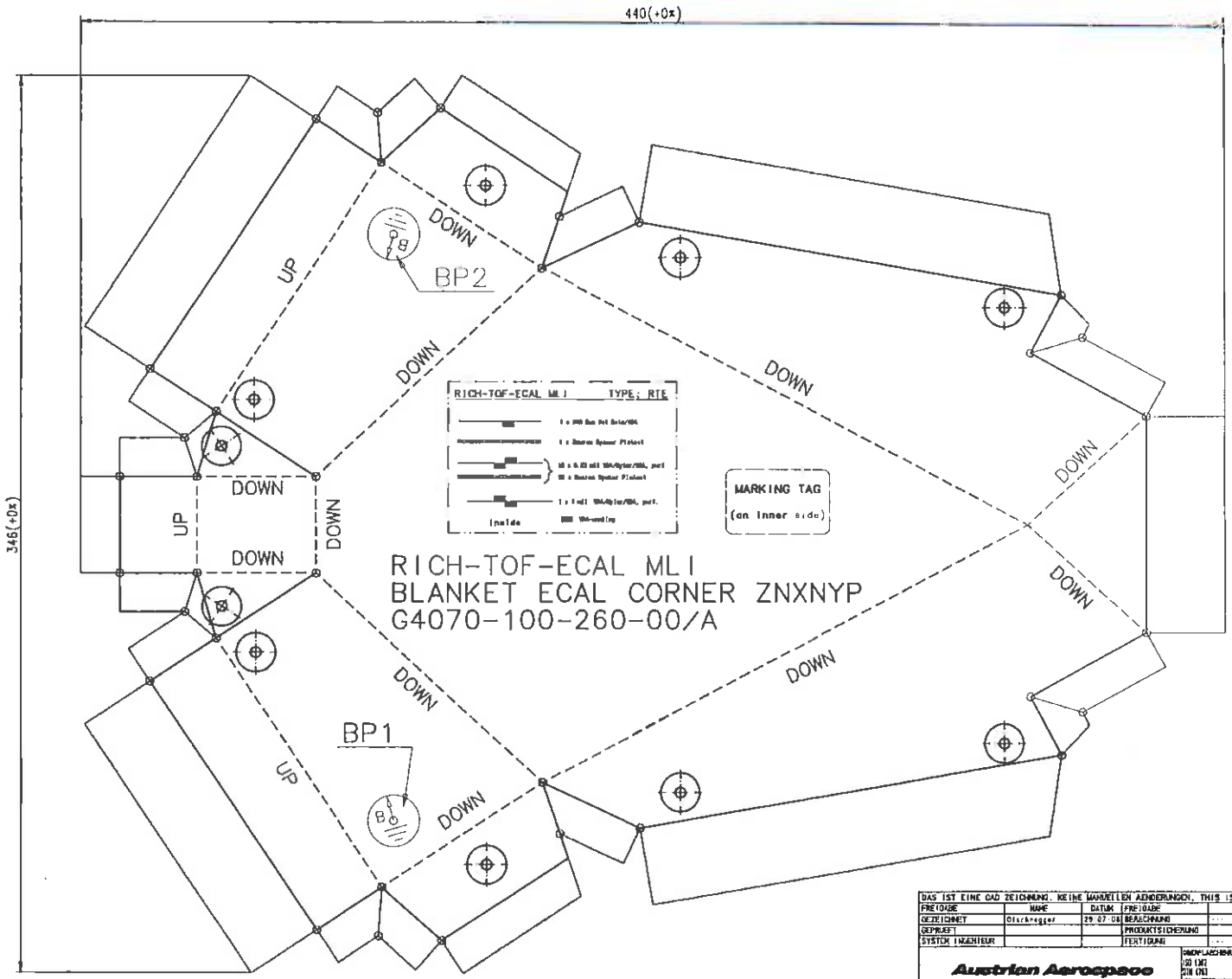

AAE-CADM
04. AUG. 2008
RECEIVED

A3 Copy of
off. issue A

DAS IST EINE CAD ZEICHNUNG. KEINE MANUELLEN ÄNDERUNGEN. THIS IS A CAD DRAWING. NO MANUAL CHANGES.

FREIGABE	NAME	DATUM	FREIGABE	NAME	DATUM
GEZEICHNET	Dischregger	29.07.08	BERECHNUNG	...	...
GEPRÜFT			PRODUKTSICHERUNG		
SYSTEM INGENIEUR			FERTIGUNG	...	...

FREIMASSTOLERANZ GEN. TOLERANCES

Austrian Aerospace

OBERFLÄCHENRAUHEIT/SURFACE FINISH ISO 1302 DIN 4768

OBERFLÄCHENBEHANDLUNG SURFACE TREATMENT

MASSTAB/SCALE 1 : 1

ALLE MÖGLICHEN FORMEN BRÜCHE BEIM ALL. MAX. MASS

H			
G			
F			
E			
D			
C			
B			
A	ISSUED		
	ÄNDERUNG	DATUM	NAME

CADM-RELEASE

ROHTEIL NR./RAWPART NO.

FILE NAME:

Blanket
Ecal Corner ZNXNYP

PROJECT: RICH-TOF-ECAL ITEM: MLI

G4070-100-260-00

CAD SYSTEM: I DEAS 12 NX Series M3

SHEET: 1 TOTAL: 1

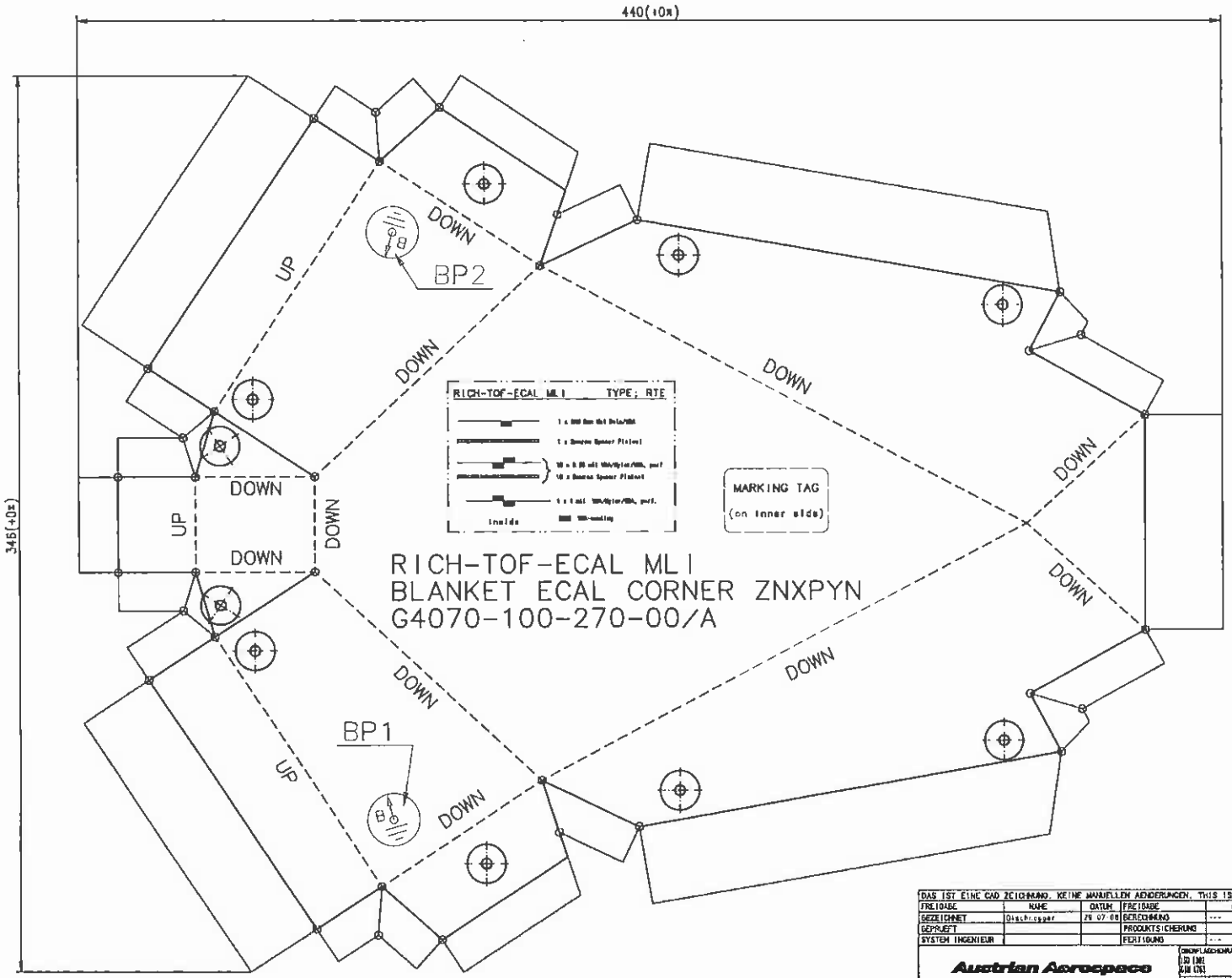

AAE-CADM
04. AUG. 2008
RECEIVED

A3 Copy of off. issue A

DAS IST EINE CAD ZEICHNUNG. KEINE MANUELLEN ÄNDERUNGEN. THIS IS A CAD DRAWING. NO MANUAL CHANGES.

FREIGABE	NAME	DATUM	FREIGABE	NAME	DATUM
GEZEICHNET	Dischrapper	29.07.08	BERECHNUNG	---	---
GEPRÜFT			PRODUKTSICHERUNG		
SYSTEM INGENIEUR			FERTIGUNG	---	---

FREIMASSTOLERANZ GEN. TOLERANCES

Austrian Aerospace

OBERFLÄCHENRAUHEIT/SURFACE FINISH ISO 1302 ALM 1783

OBERFLÄCHENBEHANDLUNG SURFACE TREATMENT

MASSTAB/SCALE 1 : 1

Blanket
Ecal Corner ZNXPYN

PROJECT: RICH-TOF-ECAL | ITEM: MI

G4070-100-270-00

CAD SYSTEM: I-DEAS 12 NX Series m3

BLATT 1 / ANZ. 1

H		
G		
F		
E		
D		
C		
B		
A	ISSUED	
	ÄNDERUNG	DATUM	NAME

ROHTEIL NR./RAWPART NO.

CADM RELEASE

FILE NAME:

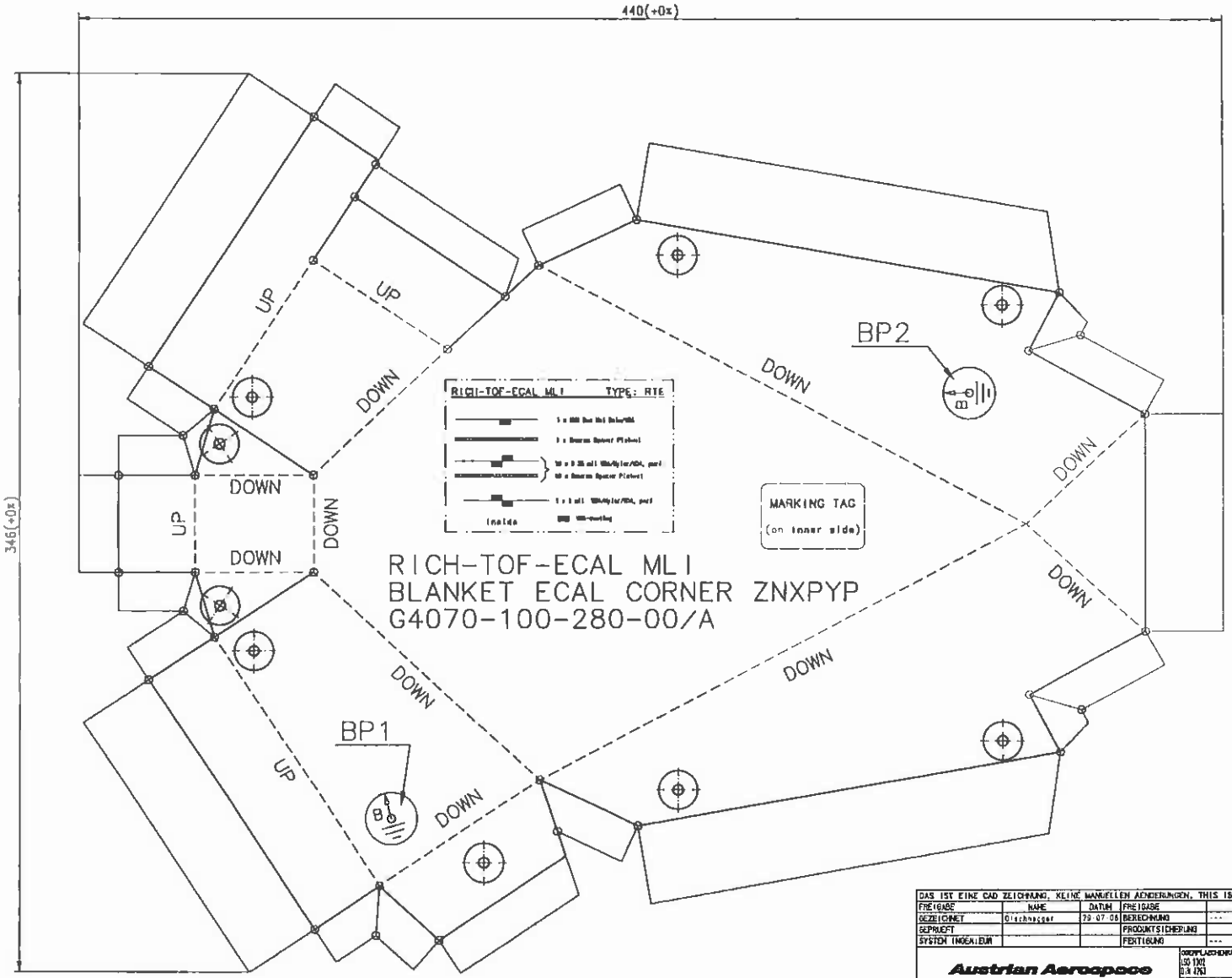

AAE-CADM
04. AUG. 2008
RECEIVED

A3 Copy of off. issue A

DAS IST EINE CAD ZEICHNUNG, KEINE MANUELLEN ÄNDERUNGEN. THIS IS A CAD DRAWING. NO MANUAL CHANGES.

	NAME	DATUM		NAME	DATUM
FREIGABE			FREIGABE		
GEZEICHNET	Olschnegger	29.07.08	BERECHNUNG	---	---
GEPRÜFT			PRODUKTSICHERUNG		
SYSTEM INGENIEUR			FERTIGUNG	---	---

FINISHED TOLERANCE GEN. TOLERANCES

Austrian Aerospace

OBERFLÄCHENRAUHEIT/SURFACE FINISH ISO 1302 DIN 4763

OBERFLÄCHENBEHANDLUNG SURFACE TREATMENT

H			
G			
F			
E			
D			
C			
B			
A	ISSUED		
	ÄNDERUNG	DATUM	NAME
	CADM RELEASE		

MASSTAB/SCALE 1 : 1

ALLE BEMAßungen EntsprechEN DEM ISO 128 ZUSTAND

RICHTETA NR./RAMPART NO.

FILE NAME:

Blanket
Ecal Corner ZNXPYP

PROJECT: RICH-TOF-TOD | ITEM: MLI

G4070-100-280-00

CAD SYSTEM: T-CRAS 17 NX Series m3

BLATT/SHEET 1 | BLATT/SHEET 1

10. INTERFACE CONTROL DRAWINGS

This document is property of AUSTRIAN AEROSPACE Ges m b H.

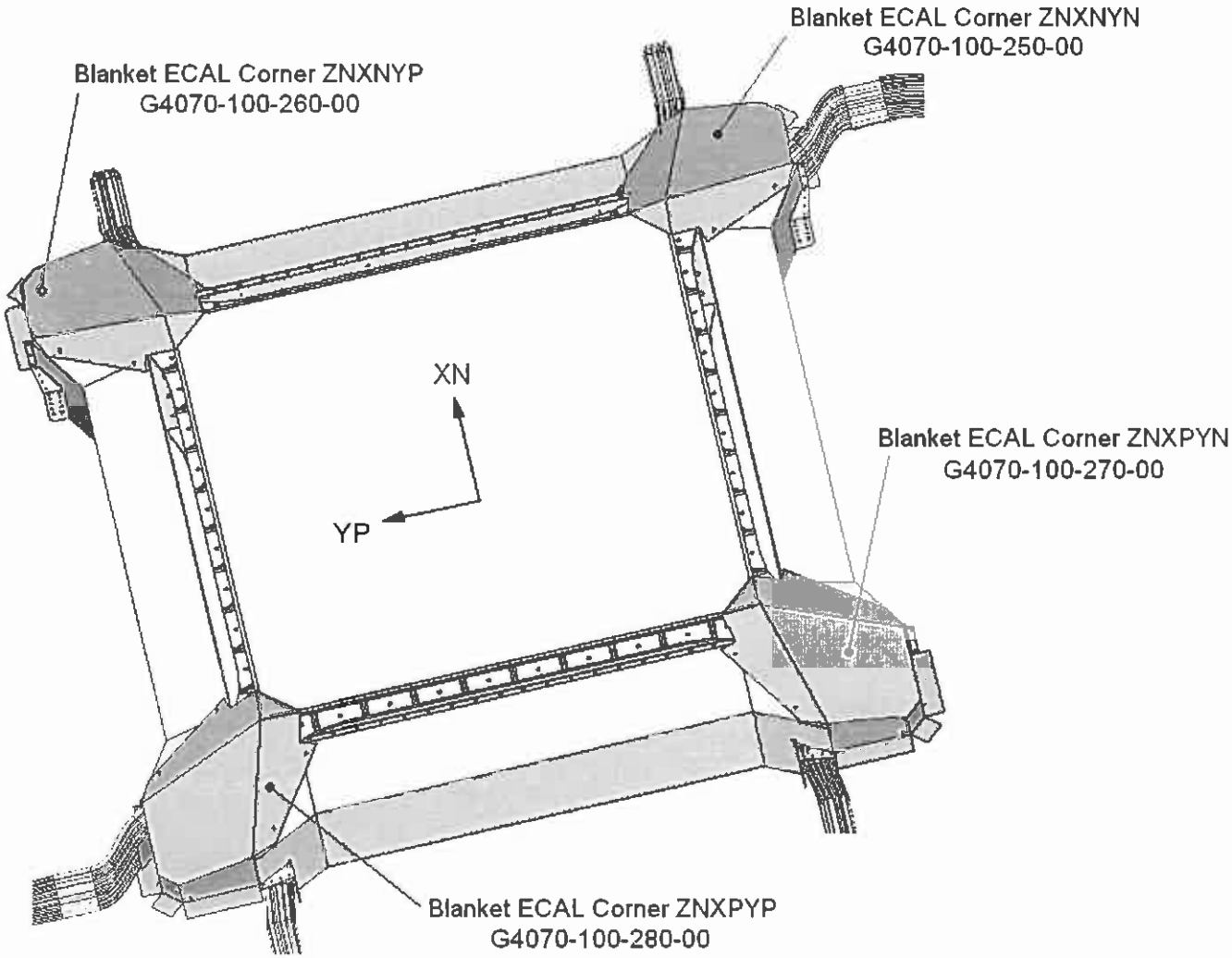

This **document is property** of AUSTRIAN AEROSPACE Ges m.b.H.

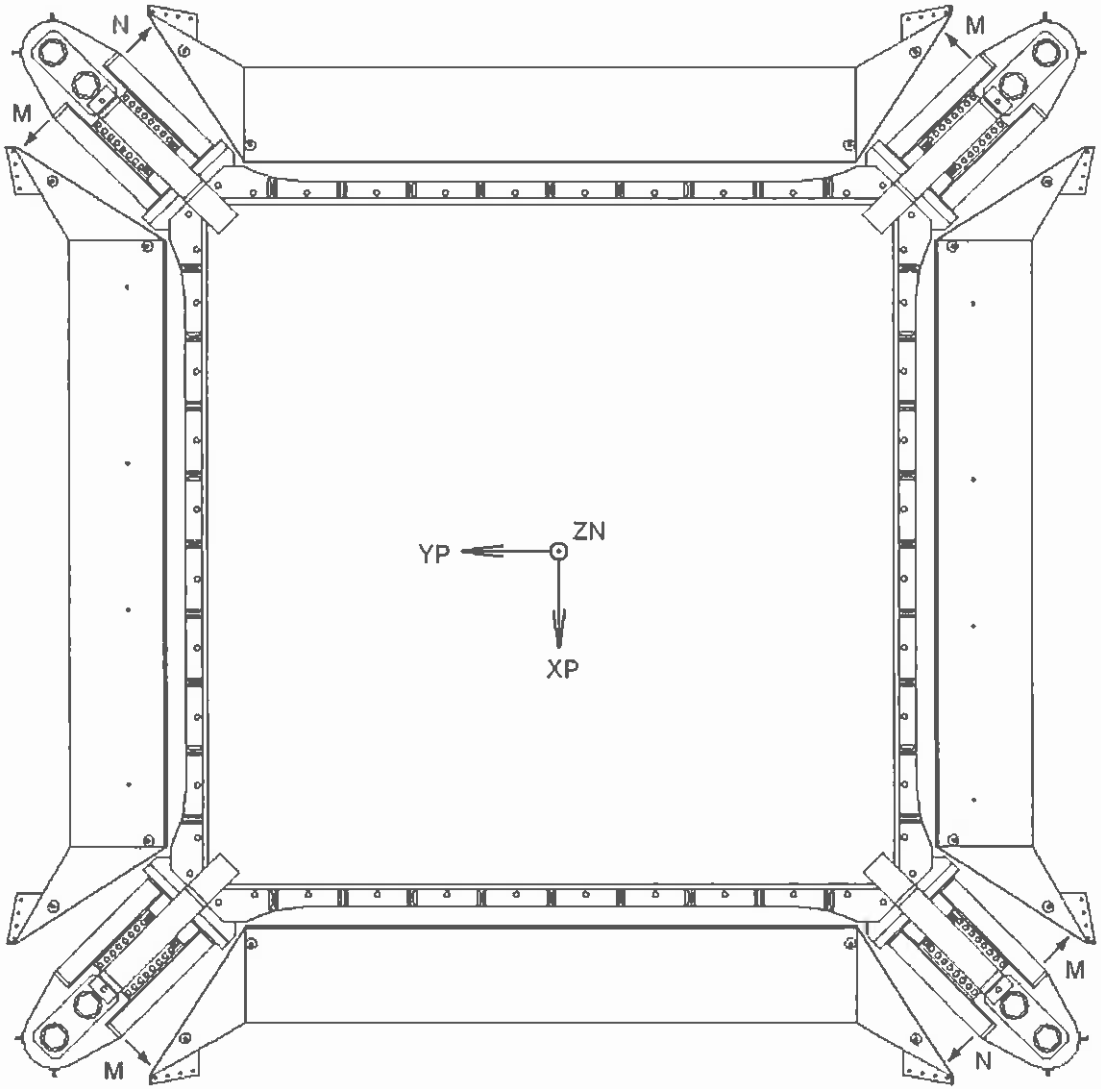

This document is **property** of AUSTRIAN AEROSPACE **Ges.m.b H**

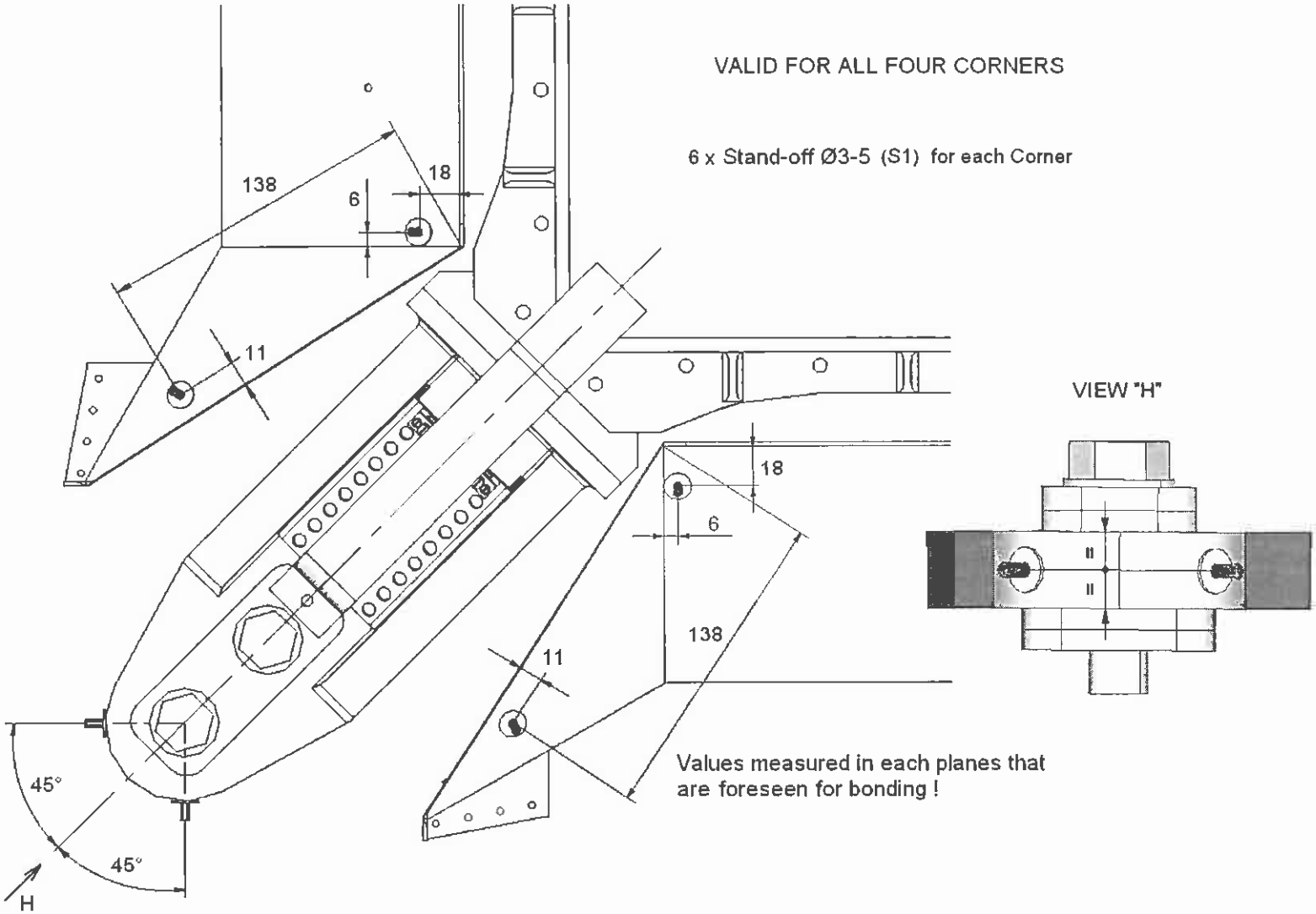
VALID FOR ALL FOUR CORNERS
6 x Stand-off Ø3-5 (S1) for each Corner
138
18
6
11
VIEW "H"
18
6
138
11
Values measured in each planes that are foreseen for bonding !
45°
45°
H

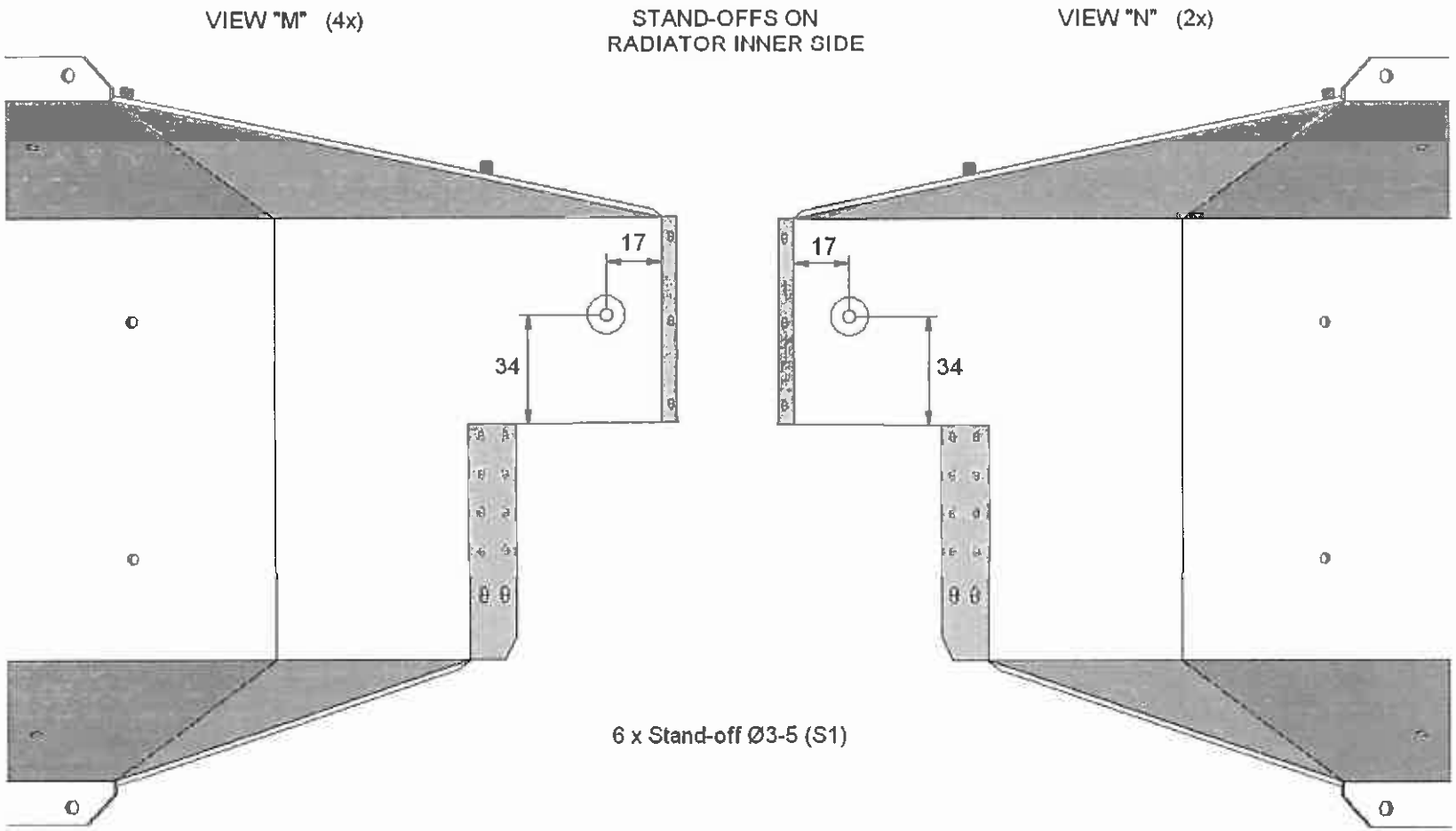

This document is property of AUSTRIAN AEROSPACE Ges m b H

11. ACCEPTANCE TEST REPORTS / MASS RECORD

11.1 ACCEPTANCE TEST REPORTS

Document Title	Document Number	Issue
Blanket Inspection Sheets ⇨ see next pages	RTEM-TLS-0006-AAE; Annex D	1.0

11.2 MASS RECORD

Seq No.	Nomenclature	Drawing-/ Identification No.	Issue	Weight (g)	Remark
1	Blanket Mass ⇨ See Blanket Inspection Sheets				
2					
3					
4					

ANHANG D: BLANKET INSPECTION SHEETS

The following Inspection steps have to be performed prior to releasing the respective frame for packing and delivery to the customer

§ I1 „JobCards filled“:	Check if all steps in the JobCards have been properly performed an signed off by the manufacturing responsible
§ I2 „Marking Tag“:	Check of correct position of the Marking Tag and correct references on the Marking Tag
§ I3 „Lay-up“:	Check of correct blanket lay-up by inspection of the lay-up sample of the package used for manufacturing of the respective blanket. The reference number of the lay-up sample may be added in this column too.
§ I4 „Conformance with Design“:	Check if the respective blanket has been manufactured in accordance with the respective template and all additional instructions provided in the JobCards
§ I5 „Cleanliness“:	Check of required cleanliness level (Requirement: „visual clean“)
§ I6 „Resistance Measurements“:	The following resistance measurements have to be performed I. resistance between one pair of opposite grounding points: <1 Ohm II. resistance between VDA surface of inner layer and one grounding point: <80 Ohm
§ I7 „Further processing“:	Release of blanket for packing
„Mass“:	The mass of the respective blanket has to be weighed and recorded in this column

This document is property of AUSTRIAN AEROSPACE Ges.m.b.H.

JC Page	Inspection Steps Blanket Name Blanket No./Issue	S/N Model	§I1 [JobCards filled]	§I2 [Marking Tag]	§I3 [Lay-up]	§I4 [Conformance	§I5 [Cleanliness]	§ I6 [Resistance Measurements] I) opposite Pins II) Surface to Grounding point	§I7 [Further Processing]	Mass (g)	Date	QA sign.	Remarks
A.2	Blanket Ecal Corner ZNXNYN G4070-100-250-00/A	01 PFM	✓	✓	22/08 ✓	✓	✓	I) Pins: 0,1 Ω II) VDA: 8 Ω	✓	54	21.08. 2008	AAE PA-14	
A.3	Blanket Ecal Corner ZNXNYP G4070-100-260-00/A	01 PFM	✓	✓	22/08 ✓	✓	✓	I) Pins: 0,1 Ω II) VDA: 6 Ω	✓	53	21.08. 2008	AAE PA-14	
A.4	Blanket Ecal Corner ZNXPYN G4070-100-270-00/A	01 PFM	✓	✓	22/08 ✓	✓	✓	I) Pins: 0,1 Ω II) VDA: 5 Ω	✓	54	21.08 2008	AAE PA-14	
A.5	Blanket Ecal Corner ZNXPYP G4070-100-280-00/A	01 PFM	✓	✓	22/08 ✓	✓	✓	I) Pins: 0,1 Ω II) VDA: 6 Ω	✓	53	21.08. 2008	AAE PA-14	
A.6	Blanket RICH Lateral XN G4070-100-120-00/A	01 PFM	✓	✓	22/08 ✓	✓	✓	I) Pins: 0,2 Ω II) VDA: 4 Ω	✓	419	21.08. 2008	AAE PA-14	
A.7	Blanket RICH Lateral XP G4070-100-125-00/A	01 PFM	✓	✓	22/08 ✓	✓	✓	I) Pins: 0,2 Ω II) VDA: 4 Ω	✓	418	21.08 2008	AAE PA-14	
A.8	Blanket RICH Lateral YN G4070-100-130-00/A	01 PFM	✓	✓	22/08 ✓	✓	✓	I) Pins: 0,2 Ω II) VDA: 6 Ω	✓	417	21.08 2008	AAE PA-14	
A.9	Blanket RICH Lateral YP G4070-100-135-00/A	01 PFM	✓	✓	22/08 ✓	✓	✓	I) Pins: 0,2 Ω II) VDA: 9 Ω	✓	418	21.08. 2008	AAE PA-14	

This document is property of AUSTRIAN AEROSPACE Ges.m.b.H.