ORIGINALE ARCHIVIO

CARLO GAVAZZI SPACE SpA

AMS02-TCS

Tipo Doc.: *Doc.Type:*	SPECIFICATION			N° DRD: *DRD N°:*	DEL 030
N° Doc.: *Doc. N°:*	**AMSTCS-SP-CGS-003**	Ediz.: *Issue:* **1**	Data: *Date:* **25/03/2008**	Pagina *Page* **1**	Di *Of* **90**
Titolo : *Title :*	AMS-02 THERMAL REQUIREMENTS SPECIFICATION DOCUMENT				

	Nome & Funzione *Name & Function*	Firma *Signature*	Data *Date*
Preparato da: *Prepared by:*	Corradino I. (DT/MT)		25/03/08
Approvato da: *Approved by:*	Molina M. (DT/MT) Vettore C. (DT/MT) Cremonesi L. (PA/QA) Cinquepalmi C. (PA/CC)		25/3/08 25/03/2008 31.03.08 31.03.08
Applicazione autorizzata da: *Application authorized by:*	Ollvier M. (DT/MT)		25/03/08
Customer / Higher Level Contractor			
Accettato da: *Accepted by:*			
Approvato da: *Approved by:*			

LISTA DI DISTRIBUZIONE *DISTRIBUTION LIST*	N	A	I
Interna / *Internal*			
Esterna / *External*			
E. Russo (ASI)	1		x

N=Numero di copie A=Applicazione I=Informazione
N=Number of copy A=Application I=Information

Gestione documenti: *Data Management:* Firma / *Signature* 31/03/08 Data / *Date*

File: AMSTCS-SP-CGS-003_Iss1.doc

Questo documento contiene informazioni di proprietà di CARLO GAVAZZI SPACE SpA: Tutti i diritti sono riservati
All information contained in this document are property of CARLO GAVAZZI SPACE SpA. All right reserved.

REGISTRAZIONE DELLE MODIFICHE / *CHANGE RECORD*			
EDIZIONE *ISSUE*	DATA *DATE*	AUTORIZZAZIONE *CHANGE AUTHORITY*	OGGETTO DELLA MODIFICA E SEZIONI AFFETTE *REASON FOR CHANGE AND AFFECTED SECTIONS*
1	25/03/2008		First Issue

Questo documento contiene informazioni di proprietà di CARLO GAVAZZI SPACE SpA. Tutti i diritti sono riservati.
All information contained in this document are property of CARLO GAVAZZI SPACE SpA. All right reserved.

LISTA DELLE PAGINE VALIDE / *LIST OF VALID PAGES*

PAGINA *PAGE*	EDIZIONE *ISSUE*	PAGINA *PAGE*	EDIZIONE *ISSUE*	PAGINA *PAGE*	EDIZIONE *ISSUE*	PAGINA *PAGE*	EDIZIONE *ISSUE*	PAGINA *PAGE*	EDIZIONE *ISSUE*
1 - 90	1								
ANNEX A (1-2 / 2-2)	1								
ANNEX B (1-3 / 2-3 /3-3)	1								

Questo documento contiene informazioni di proprietà di CARLO GAVAZZI SPACE SpA. Tutti i diritti sono riservati.
All information contained in this document are property of CARLO GAVAZZI SPACE SpA. All right reserved.

TABLE OF CONTENT

ACRONYM LIST 9

1. SCOPE 10

2. RELEVANT DOCUMENTS 10

2.1 APPLICABLE DOCUMENTS 10
2.2 REFERENCE DOCUMENTS 11

3. TRD 12

3.1 TEMPERATURE REFERENCE POINT 12
3.2 TEMPERATURE RANGES 12
3.3 SHORT-TERM TEMPERATURE STABILITY 13
3.4 TEMPERATURE GRADIENTS 13
HEAT DISSIPATION 13
3.4.1 HEATERS 14
3.5 SUB DETECTOR THERMAL I/F DESCRIPTION 14
3.5.1 CONDUCTIVE 14
3.5.2 RADIATIVE 15
3.5.2.1 MLI 15
3.6 HEAT EXCHANGE REQUIREMENTS WITH NEIGHBORING SUBDETECTOR 15
3.7 TRD GAS BOX 15

4. UPPER TOF 17

4.1 TEMPERATURE REFERENCE POINT 17
4.2 TEMPERATURE RANGES 17
4.3 SHORT-TERM TEMPERATURE STABILITY 17
4.4 TEMPERATURE GRADIENTS 17
4.5 HEAT DISSIPATION 18
4.6 MECHANICAL DESIGN 18
4.7 SUB DETECTOR THERMAL I/F DESCRIPTION 18
4.7.1 CONDUCTIVE 18
4.7.2 RADIATIVE 19
4.7.2.1 MLI 19
4.8 HEAT EXCHANGE REQUIREMENTS WITH NEIGHBORING EXPERIMENTS 19

5. TRACKER 19

5.1 TEMPERATURE REFERENCE POINT 19
5.2 TEMPERATURE RANGES 20
5.3 SHORT-TERM TEMPERATURE STABILITY 22
5.4 TEMPERATURE GRADIENTS 22
5.5 HEAT DISSIPATION 22
5.5.1 HEATERS 23
5.6 SUB DETECTOR THERMAL I/F DESCRIPTION 23
5.6.1 CONDUCTIVE 23
5.6.2 RADIATIVE 24
5.6.2.1 MLI 24
5.6.2.2 Radiator 25
5.6.2.2.1 MECHANICAL DESIGN 25
5.6.2.2.2 RADIATOR INTERFACES 26
5.6.2.2.2.1 Radiative 26
5.6.2.2.2.2 Conductive 27
5.6.2.3 TTCS Pipe routing 29
5.7 HEAT EXCHANGE REQUIREMENTS WITH NEIGHBORING SUBDETECTORS 30
5.8 TTCB 31
5.9 TTCS WEIGHT 31

Questo documento contiene informazioni di proprietà di CARLO GAVAZZI SPACE SpA. Tutti i diritti sono riservati.
All information contained in this document are property of CARLO GAVAZZI SPACE SpA. All right reserved.

6. STAR TRACKER 32

6.1 TEMPERATURE REFERENCE POINT 32
6.2 TEMPERATURE RANGES 32
6.3 HEAT DISSIPATION 33
6.4 MECHANICAL DESIGN 33
6.5 SUB DETECTOR THERMAL I/F DESCRIPTION 34
6.5.1 CONDUCTIVE 34
6.5.2 RADIATIVE 35
6.6 HEAT EXCHANGE REQUIREMENTS WITH NEIGHBORING SUBDETECTORS 35

7. ACC 36

7.1 TEMPERATURE REFERENCE POINT 36
7.2 TEMPERATURE RANGES 36
7.3 HEAT DISSIPATION 36
7.4 MECHANICAL DESIGN 36
7.5 SUB DETECTOR THERMAL I/F DESCRIPTION 37
7.5.1 CONDUCTIVE 37
7.5.2 RADIATIVE 38

8. ELECTRONICS 38

8.1 TEMPERATURE REFERENCE POINT 38
8.2 TEMPERATURE ACCEPTANCE RANGES 38
8.3 SHORT-TERM TEMPERATURE STABILITY 40
8.4 HEAT DISSIPATION 41
8.4.1 STANDARD ELECTRONIC UNITS (CRATES + XPD) 41
8.4.2 NON STANDARD ELECTRONIC UNITS 41
8.5 MECHANICAL DESIGN: MASS AND SIZE 42
8.5.1 STANDARD ELECTRONIC UNITS (CRATES + XPD) 42
8.5.2 NON STANDARD ELECTRONIC UNITS 42
8.6 ELECTRONIC UNITS THERMAL I/F DESCRIPTION 43
8.6.1 CONDUCTIVE 43
8.6.2 RADIATIVE 44
8.6.2.1 MLI 44
8.6.2.2 Radiator 46
8.6.2.2.1 mechanical design 47
8.6.2.2.2 RADIATOR INTERFACES 47
8.6.2.2.2.1 Radiative 47
8.6.2.2.2.2 Conductive 47

9. CAB 49

9.1 TEMPERATURE REFERENCE POINT 49
9.2 TEMPERATURE RANGES 49
9.3 HEATERS 55
9.4 HEAT DISSIPATION 55
9.5 MECHANICAL DESIGN 58
9.6 SUB DETECTOR THERMAL I/F DESCRIPTION 58
9.6.1 CONDUCTIVE 58
9.6.2 RADIATIVE 62

10. MAGNET / VACUUM CASE 63

10.1 TEMPERATURE REFERENCE POINT 63
10.2 TEMPERATURE RANGES 63
10.3 HEAT DISSIPATION 63
10.4 SUB DETECTOR THERMAL I/F DESCRIPTION 64
10.4.1 CONDUCTIVE 64
10.4.2 RADIATIVE 64
10.4.2.1 MLI 64

Questo documento contiene informazioni di proprietà di CARLO GAVAZZI SPACE SpA. Tutti i diritti sono riservati.
All information contained in this document are property of CARLO GAVAZZI SPACE SpA. All right reserved.

10.4.2.2 Other surfaces 65
10.5 PILOT VALVE VACUUM VESSEL (PVVV) 66
10.6 CDD 66
10.7 UPS 67

11. CRYOCOOLERS 68

11.1 TEMPERATURE REFERENCE POINT 68
11.2 TEMPERATURE RANGES 68
11.3 HEAT DISSIPATION 68
11.4 SUB DETECTOR THERMAL I/F DESCRIPTION 69
11.4.1 CONDUCTIVE 69
11.4.2 RADIATIVE 71
11.4.2.1 MLI 71

12. CRYOCOOLERS ZENITH RADIATOR 72

12.1 TEMPERATURE REFERENCE POINT 72
12.2 TEMPERATURE RANGES 72
12.3 MECHANICAL DESIGN 72
12.4 SUB DETECTOR THERMAL I/F DESCRIPTION 74
12.4.1 CONDUCTIVE 74
12.4.2 RADIATIVE 74

13. LOWER TOF 75

13.1 TEMPERATURE REFERENCE POINT 75
13.2 TEMPERATURE RANGES 75
13.3 SHORT-TERM TEMPERATURE STABILITY 75
13.4 TEMPERATURE GRADIENTS 75
13.5 HEAT DISSIPATION 75
13.6 MECHANICAL DESIGN 77
13.7 SUB DETECTOR THERMAL I/F DESCRIPTION 77
13.7.1 CONDUCTIVE 77
13.7.2 RADIATIVE 77

14. RICH 78

14.1 TEMPERATURE REFERENCE POINT 78
14.2 TEMPERATURE RANGES 78
14.3 TEMPERATURE GRADIENTS 78
14.4 HEAT DISSIPATION 79
14.5 SUB DETECTOR THERMAL I/F DESCRIPTION 79
14.5.1 CONDUCTIVE 79
14.5.2 RADIATIVE 79
14.5.2.1 MLI 79
14.6 HEAT EXCHANGE REQUIREMENTS WITH NEIGHBORING EXPERIMENTS 79

15. ECAL 80

15.1 TEMPERATURE REFERENCE POINT 80
15.2 TEMPERATURE RANGES 80
15.3 SHORT-TERM TEMPERATURE STABILITY 80
15.4 TEMPERATURE GRADIENTS 80
15.5 HEAT DISSIPATION 81
15.6 SUB DETECTOR THERMAL I/F DESCRIPTION 81
15.6.1 RADIATIVE 81
15.6.1.1 MLI 81
15.6.1.2 Radiator 81
15.7 HEAT EXCHANGE REQUIREMENTS WITH NEIGHBORING EXPERIMENTS 82

16. USS 82

Questo documento contiene informazioni di proprietà di CARLO GAVAZZI SPACE SpA. Tutti i diritti sono riservati.
All information contained in this document are property of CARLO GAVAZZI SPACE SpA. All right reserved.

16.1 TEMPERATURE REFERENCE POINT 82
16.2 TEMPERATURE RANGES 82
16.3 SHORT-TERM TEMPERATURE STABILITY 82
16.4 TEMPERATURE GRADIENTS 82
16.5 HEAT DISSIPATION 83
16.6 SUB DETECTOR THERMAL I/F DESCRIPTION 83
16.6.1 CONDUCTIVE 83
16.6.2 RADIATIVE 83
16.6.2.1 MLI 84
16.7 HEAT EXCHANGE REQUIREMENTS WITH NEIGHBORING EXPERIMENTS 84

17. ISS/STS INTEGRATION HARDWARE 84

17.1 THERMAL REQUIREMENTS 84

18. SYSTEM LEVEL REQUIREMENTS 85

18.1 TEMPERATURE REFERENCE POINT 85
18.2 TEMPERATURE REQUIREMENTS 85
18.3 MISSION PHASES 86
18.4 POWER 87
18.4.1 STS UNMATED PHASES 87
18.4.2 STS DOCKING PHASE 87
18.4.3 TRANSFER PHASE 87
18.4.4 NOMINAL OPERATIONS ON ISS 88
18.5 HEATERS 88

19. OPTICAL PROPERTIES 90

LIST OF FIGURES

Fig. 3-1 - TRD thermal control concept 13
Fig. 4-1 - TOF brackets 18
Fig. 5-1 - TRP TTCS Box radiator plate 20
Fig. 5-2 - TRP TTCS Box 20
Fig. 5-3 - MLI covering the tracker bottom plane 25
Fig. 5-4 - Tracker radiator fixation to the USS-02 26
Fig. 5-5 - Tracker radiators, in red 26
Fig. 5-6 - Rod network scheme 28
Fig. 5-7 - Tracker radiator bracket network 28
Fig. 5-8 - Mechanical interface between the condenser and the radiator. 28
Fig. 5-9 - Condenser mounting concept (cross section) 29
Fig. 5-10 - Tracker CO2 cooling loop condenser on the radiator 29
Fig. 6-1 - Star tracker assembly on AMS-02 33
Fig. 6-2 - Star Tracker thermal I/F. 34
Fig. 7-1 - ACC PMTs location 37
Fig. 8-1 - Crates accommodation. 40
Fig. 8-2 - Interface radiator-crate 44
Fig. 8-3 - Interface radiator-XPD 44
Fig. 8-4 - Thermo-optical properties on crates, XPD and Tof Hv on main radiators (PDS surface will be either coated or covered with low absorbivity painting/tape.) 45
Fig. 8-5 - Thermo optical properties on ECAL and RICH HV bricks 46
Fig. 8-6 - Upper Bracket TMM nodalization 48
Fig. 8-7 - Lower bracket TMM nodalization 48
Fig. 9-1- Power in shunt, Magnet wires and 6 CCS-CS module for Ramp-up condition. 56
Fig. 9-2 - Power in shunt, Magnet wires and 5 CCS-CS module for Ramp-up condition – FOR INFORMATION ONLY; not for sizing purposes 57
Fig. 9-3 - Power in entire CAB for Ramp-down condition 57
Fig. 9-4 - CAB assembly 59

Questo documento contiene informazioni di proprietà di CARLO GAVAZZI SPACE SpA. Tutti i diritti sono riservati.
All information contained in this document are property of CARLO GAVAZZI SPACE SpA. All right reserved.

Fig. 9-6 - /F between LHP evaporator and CAB 60
Fig. 9-7 - HP Mounted between the USS Upper trunnion bridge and the USS Upper I/F Joint 60
Fig. 10-1 - MLI on Vacuum Case facing the main radiators 65
Fig. 10-2 - MLI between vacuum case upper support ring and TRD 65
Fig. 10-3 – Heat dissipated by dump diodes during magnet discharge 67
Fig. 11-1 - Typical Lay out of cryocooler LHP System 70
Fig. 11-2- Conductance between cold tip and cryocooler body 70
Fig. 12-1 - X_0 for heat pipes inside the Zenith radiator 73
Fig. 12-2 – Cryocooler radiator side view 73
Fig. 12-3 - Main dimensions of Cryo-cooler radiator panel with condenser tubing routing (1/4 of the whole radiator is shown) 74
Fig. 16-1 - USS02 Thermo-optical properties 83

Questo documento contiene informazioni di proprietà di CARLO GAVAZZI SPACE SpA. Tutti i diritti sono riservati.
All information contained in this document are property of CARLO GAVAZZI SPACE SpA. All right reserved.

ACRONYM LIST

AD	Applicable Document
ASTC	Amica Star Tracker Camera
ASTE	Amica Star Tracker Electronics
BOL	Begin Of Life
CCEB	Cryo Cooler Electronic Box
CDD	Cryo Dump Diodes
CGS	Carlo Gavazzi Space
CUPS	Cryomagnet Interruptible Power Supply
CVB	Cryo Magnet Valves
EOL	End Of Life
GMM	Geometrical Mathematical Model
I/F	Interface
ISS	International Space Station
MLI	Multi Layer Insulation
MPA	Minimum Propulsion Attitude
PDS	Power Distribution System
RD	Reference Document
TAS	Tracker Alignment System
TBC	To Be Confirmed
TBD	To Be Defined
TBW	To Be Written
TCS	Thermal Control Subsystem
TMM	Thermal Mathematical Model
TRP	Temperature Reference Point
TTCB	Tracker Thermal (Control) Component Box
TTCB-P	Tracker Thermal (Control) Component Box Primary
TTCB-S	Tracker Thermal (Control) Component Box Secondary
UPS	Uninterruptible Power Supply
w.r.t.	With respect to

Questo documento contiene informazioni di proprietà di CARLO GAVAZZI SPACE SpA. Tutti i diritti sono riservati.
All information contained in this document are property of CARLO GAVAZZI SPACE SpA. All right reserved.

1. SCOPE

The present document contains the collection of thermal requirements of AMS-02 subdetectors, the description of the thermal interfaces among them, the requirements at these interfaces, and input data for thermal analysis (power dissipation and thermal control description).

Each one of the requirements presented in the tables shall be verified by a combination of the following methods (at least one):

- **Review of Design (ROD)**: review of technical layout, functional descriptions, drawings and schematics
- **Analysis (A)**: thermal and structural analysis
- **Test (T)**: environmental tests, performance tests, ...
- **Inspection (I)**: H/W inspection, integration inspection, process inspection, ...
- **Similarity (S)**: similarity with similar qualifications or applications

The different possible levels of verification are:

- **Equipment (EQ)**: PMTs, electronic boards, tracker silicon plane...
- **Sub-system (SS)**: AMS-02 single sub-detector
- **System (SY)**: AMS-02 experiment

The document corresponds to contract deliverable DEL 030.

2. RELEVANT DOCUMENTS

Documents here below identified are applicable and/or reference for the activities described in the present document and are considered part of it to the extent specified herein.

2.1 APPLICABLE DOCUMENTS

AD	Doc.Number	Issue/Date	Rev.	Title/Applicability
1	JSC-28792	15/09/2003	C	AMS-02 Structural Verification Plan for the Space Transportation System and the International Space Station.
2	JSC29095	Aug 2004		AMS-02 Experiment/ Payload Integration Hardware (PIH) Interfaces
3	JSC29202	Feb 2005	C	Experiment/Vacuum Case Payload Integration Hardware Interface
4	AMS-RQ-CGS-001, Iss.1	May 2007		AMS-02 Thermal Requirements and Interface definition

Questo documento contiene informazioni di proprietà di CARLO GAVAZZI SPACE SpA. Tutti i diritti sono riservati.
All information contained in this document are property of CARLO GAVAZZI SPACE SpA. All right reserved.

2.2 REFERENCE DOCUMENTS

RD	Doc.Number	Issue/Date	Rev.	Title/Applicability
1	RICSYS-MI-CGS-006	1/Dec/2004	N/A	Thermal Analysis and Design Progress Report on Technical Interchange Meeting
2	AMS-552-SPEC-001	August 10, 2005	B	Thermal Requirements for the Interface between the Cryocooler and the External Thermal Control System
3	Email from K. Luebelsmeyer	21 June, 2006	N/A	TRD Gas System & Electronics Temperature Ranges
4	Flight Design	April 2005	N/A	Flight Design http://ams.cern.ch/AMS/Electronics/FlightDesign.html
5	E-mail from Mark Gallilee	December 4th 2006	N/A	Warm Helium Tank requirements
6	AMS02-TN-CGS-007	16 October 2006	N/A	AMS-02 120V and 28V Heater description
7	AMSTR-NLR-TN-043	1 September 2006	3	TTCS heater specification
8	Email from K. Luebelsmeyer	27 February 2007	N/A	ICD's Updates
9	Email from Muñoz Fernandez Guillermo	11 Februay 2008	N/A	CAB Parameters Meeting
10	NSTS 07700, Volume XIV, Appendix 2	27/09/2000		System Description and Design Data - Thermal

Questo documento contiene informazioni di proprietà di CARLO GAVAZZI SPACE SpA. Tutti i diritti sono riservati.
All information contained in this document are property of CARLO GAVAZZI SPACE SpA. All right reserved.

3. TRD

3.1 TEMPERATURE REFERENCE POINT

Req. Id. N.	Requirement	EQ	SS	SY	Remarks
AMSTH-3.1 -010	All the temperature requirements of the TRD sub-detector, unless differently specified, shall refer to Temperature Reference Points (TRP). TRD mounting brackets are the location for TRD Temperature Reference Point. Their temperatures can be related to the general status of the equipment and to the critical components, which are flipper valves, electronic boards, O-ring of the manifolds	ROD, S	ROD		

3.2 TEMPERATURE RANGES

Req. Id. N.	Requirement	EQ	SS	SY	Remarks
AMSTH-3.2 -010	The TRD operative temperature range shall be: from –20°C to+40 °C see [RD 3]. Best performance range is +10 °C to +25 °C..		A	T	See RD [3], RD[8].
AMSTH-3.2 -011	DOR (Double-O-ring) - Connectors operative temperature range shall be: from -20°C to +40°C	T			See RD [3], RD[8]
AMSTH-3.2 -012	DOR (Double-O-ring) - Connectors non operative temperature range shall be: from -25 °C to +40°C	T			See RD [3], RD[8]
AMSTH-3.2 -013	Manifold operative temperature range shall be: from -20°C to +40°C	T			See RD [3], RD[8]
AMSTH-3.2 -014	Manifold non operative temperature range shall be: from -25°C to 40°C	T			See RD [3], RD[8]
AMSTH-3.2 -015	TRD Straw module operative temperature range shall be: from -20°C to +40°C	T			See RD [3], RD[8]
AMSTH-3.2 -016	TRD Straw module non operative temperature range shall be: from -25°C to +40°C	T			See RD [3], RD[8]
AMSTH-3.2 -018	Flipper Valve Switching Operat. Range : 0°C to 40°C	T			
AMSTH-3.2 -020	The TRD non operative temperature range shall be: from -25 °C to +40 °C.		A	T	See RD [3], RD[8]

Questo documento contiene informazioni di proprietà di CARLO GAVAZZI SPACE SpA. Tutti i diritti sono riservati.
All information contained in this document are property of CARLO GAVAZZI SPACE SpA. All right reserved.

3.3 SHORT-TERM TEMPERATURE STABILITY

Req. Id. N.	Requirement	EQ	SS	SY	Remarks
AMSTH-3.3 -010	The temperature variation along one orbit shall be within ±1°C.		A, T		

3.4 TEMPERATURE GRADIENTS

Req. Id. N.	Requirement	EQ	SS	SY	Remarks
AMSTH-3.4 -010	The spatial temperature gradient between the top and the bottom shall not exceed 3°C.		A	T	
AMSTH-3.4 -020	The spatial temperature gradient along the periphery shall not exceed 3°C.		A	T	

HEAT DISSIPATION

Req. Id. N.	Requirement	EQ	SS	SY	Remarks
AMSTH-0-010	The TRD dissipation is 18.5 W (82 PCB, 0.226 W each).		ROD, T	T	
AMSTH-0-020	The TRD thermal control concept is based on conduction of the dissipated heat to the USS-02 and on radiative heat exchange through MLI enclosure.		ROD, I	I	

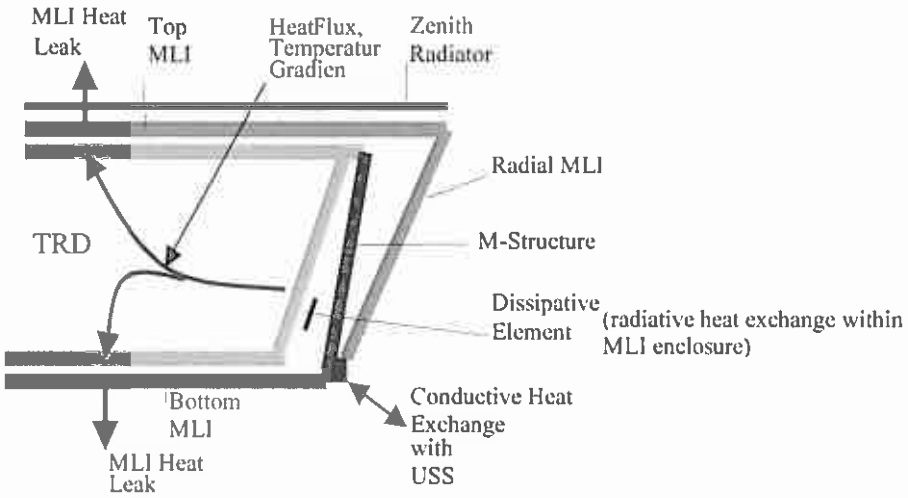

Fig. 3-1 - TRD thermal control concept.
The upper TOF is embedded within the same MLI wrapping the TRD detector.

Questo documento contiene informazioni di proprietà di CARLO GAVAZZI SPACE SpA. Tutti i diritti sono riservati.
All information contained in this document are property of CARLO GAVAZZI SPACE SpA. All right reserved.

3.4.1 HEATERS

Req. Id. N.	Requirement	EQ	SS	SY	Remarks
AMSTH-3.4.1 -010	To bring the TRD global temperature above 0°C for the worst cold case, each of the 4 M-units will be heated by 17,5 W (total 70W) at 120V.		ROD,T	T	

3.5 SUB DETECTOR THERMAL I/F DESCRIPTION

3.5.1 CONDUCTIVE

Req. Id. N.	Requirement	EQ	SS	SY	Remarks
AMSTH-3.5.1 -010	The TRD is mounted on a dedicated M structure, mechanically constrained to the USS.		I		
AMSTH-3.5.1 -020	The conductive coupling (Aluminum brackets + interface conductance) for each of the 4 support brackets shall be 0.483 W/K .		ROD		
AMSTH-3.5.1 -030	Gas tubes and electrical cables provide additional thermal links. The TRD Signal cables (82 pieces ; 4 m long) overall conductive coupling shall be 0.06 W/K. The TRD Senscables (8 pieces ; 4 m long) overall conductive coupling shall be 0.009 W/K. The HV cable (82 pieces ; 4 m long) overall conductive coupling shall be 0.006 W/K. These links are not taken into account in system level TMM.		ROD		

Questo documento contiene informazioni di proprietà di CARLO GAVAZZI SPACE SpA. Tutti i diritti sono riservati.
All information contained in this document are property of CARLO GAVAZZI SPACE SpA. All right reserved.

3.5.2 RADIATIVE

3.5.2.1 MLI

Req. Id. N.	Requirement	EQ	SS	SY	Remarks
AMSTH-3.5.2.1 -010	TRD shall be completely wrapped, together with Upper TOF, by MLI in order to minimize heat transfer with the surroundings and reduce internal gradients. The TRD outer layer shall be composed by Beta Cloth, (see par. 16) . In system level thermal model values provided by Austrian Aerospace for 20 layers MLI are used with a degradation factor of 10. In detailed thermal model a value of $\varepsilon^* = 0.03$ is used.		ROD, I		
AMSTH-3.5.2.1 -020	TRD MLI shall weigh less than 11.1 Kg	ROD, T			

3.6 HEAT EXCHANGE REQUIREMENTS WITH NEIGHBORING SUBDETECTOR

Req. Id. N.	Requirement	EQ	SS	SY	Remarks
AMSTH-3.6 -010	The heat leak toward Vacuum case (nadir direction) shall be minimized. The TRD dissipation shall be rejected at the larger extent towards the USS-02 upper joints, by linear conductance, via the four support brackets.		ROD		

3.7 TRD GAS BOX

Req. Id. N.	Requirement	EQ	SS	SY	Remarks
AMSTH-3.7 -005	All the temperature requirements of the TRDGB, unless differently specified, shall refer to Temperature Reference Points (TRP). TRP is defined on TRDGB aluminum plate. Its temperature can be related to the general status of the equipment and to the critical components.	ROD, S	ROD		
AMSTH-3.7 -010	Temperature Operational range: generic	T	A		

Questo documento contiene informazioni di proprietà di CARLO GAVAZZI SPACE SpA. Tutti i diritti sono riservati.
All information contained in this document are property of CARLO GAVAZZI SPACE SpA. All right reserved.

	-10°C to + 40°C for valve gas tightness Valves: +5 °C ÷+55°C Pump: +5 °C ÷+40°C for residual fluid volume measurement Xe tank : +20 °C ÷+65°C CO2 tank: +34 °C ÷+65°C				
AMSTH-3.7 -020	Temperature Non Operational ranges: Valves: for valve gas tightness -20°C ÷+65°C Xe tank : -51 °C ÷+65°C CO2 tank: -73 °C ÷+65°C	T			
AMSTH-3.7 -030	Heat Dissipation (Supply) 0.6W on the Tower Valve group 0.3W on the upper 2-valve group	T			
AMSTH-3.7 -040	Heat Dissipation (Circulation) 3.6W	T		T	
AMSTH-3.7 -050	Mechanical Design (Supply) Fixation point: USS02			ROD, I	
AMSTH-3.7 -060	Mechanical Design (Circulation) Fixation point: USS02			ROD, I	
AMSTH-3.7 -070	Thermal I/F (Supply) Conduction to USS02		ROD		
AMSTH-3.7 -080	Thermal I/F (Circulation) Conduction to USS02		ROD		
AMSTH-3.7 -090	TRDGB (supply + circuitry + pumps) is entirely wrapped within MLI		ROD, I		
AMSTH-3.7 -100	TRDGB MLI weight shall be within TRDGB weight budget.		ROD		

Questo documento contiene informazioni di proprietà di CARLO GAVAZZI SPACE SpA. Tutti i diritti sono riservati.
All information contained in this document are property of CARLO GAVAZZI SPACE SpA. All right reserved.

4. UPPER TOF

4.1 TEMPERATURE REFERENCE POINT

Req. Id. N.	Requirement	EQ	SS	SY	Remarks
AMSTH-4.1 –010	All the temperature requirements of the UPPER TOF sub-detector shall refer to Temperature Reference Points (TRP). The location of the TRPs is at PMT level, one per side of the TOF, relevant to the PMT in mid location. Hence, totally 4 TRPs are foreseen.	ROD, S	ROD		

4.2 TEMPERATURE RANGES

Req. Id. N.	Requirement	EQ	SS	SY	Remarks
AMSTH-4.2 -010	The operative temperature range shall be: from -30 °C to +45 °C on the PMT, which corresponds to -32°C to +43°C on the accessible location for the Dallas sensors.	S (by the PMT supplier), T	A, S	A	No thermal test foreseen on the upper TOF. Similarity to the Upper TOF TV test (TBC by INFN-BO)
AMSTH-4.2 -020	The non operative temperature range shall be: from -35 °C to +50°C.	S (by the PMT supplier), T	A, S	A	Ditto

4.3 SHORT-TERM TEMPERATURE STABILITY

Req. Id. N.	Requirement	EQ	SS	SY	Remarks
AMSTH-4.3 -010	The peak-to-peak temperature variation along one orbit shall be within 5°C.		A		

4.4 TEMPERATURE GRADIENTS

Req. Id. N.	Requirement	EQ	SS	SY	Remarks
AMSTH-4.4 -010	The spatial temperature gradient between the TOF structure (carbon fiber box) and the PMTs shall not exceed 10°C.		A, T	T	

Questo documento contiene informazioni di proprietà di CARLO GAVAZZI SPACE SpA. Tutti i diritti sono riservati.
All information contained in this document are property of CARLO GAVAZZI SPACE SpA. All right reserved.

4.5 HEAT DISSIPATION

Req. Id. N.	Requirement	EQ	SS	SY	Remarks
AMSTH-4.5 -010	3.68W are dissipated on the 68PMTs, 0.130 W are dissipated on the 4 SFEC boards, for a total of 0.52 W. The total heat dissipated is then 4.2W	T	T	T	

4.6 MECHANICAL DESIGN

Req. Id. N.	Requirement	EQ	SS	SY	Remarks
AMSTH-4.6 -010	A carbon fiber box is used to encapsulate the PMTs		ROD		

4.7 SUB DETECTOR THERMAL I/F DESCRIPTION

4.7.1 CONDUCTIVE

Req. Id. N.	Requirement	EQ	SS	SY	Remarks
AMSTH-4.7.1 -010	The PMTs are conductively thermally decoupled from the structure. For this reason no requirement applies to the conductance from the Upper TOF panels to the M structure that must be lower than 10W/K.		ROD		

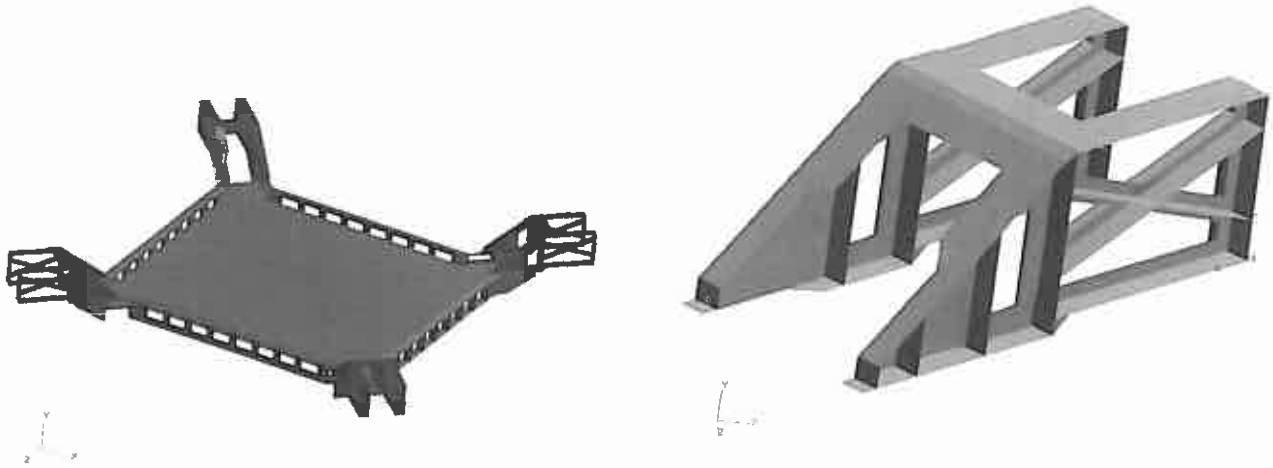

Fig. 4-1 - TOF brackets.

Questo documento contiene informazioni di proprietà di CARLO GAVAZZI SPACE SpA. Tutti i diritti sono riservati.
All information contained in this document are property of CARLO GAVAZZI SPACE SpA. All right reserved.

4.7.2 RADIATIVE

Req. Id. N.	Requirement	EQ	SS	SY	Remarks
AMSTH-4.7.2 -010	No external radiator is used for the Upper TOF.		ROD		

4.7.2.1 MLI

See par. 3.5.2.1

4.8 HEAT EXCHANGE REQUIREMENTS WITH NEIGHBORING EXPERIMENTS

Req. Id. N.	Requirement	EQ	SS	SY	Remarks
AMSTH-4.8 -10	The Upper TOF detector shall be thermally coupled to the TRD.		ROD		

5. TRACKER

5.1 TEMPERATURE REFERENCE POINT

Req. Id. N.	Requirement	EQ	SS	SY	Remarks
AMSTH-5.1 -010	All the temperature requirements of the TRACKER sub-detector shall refer to Temperature Reference Points (TRP). The location of the TRP is defined by the equipment supplier on the TTCS evaporator; its temperature can be related to the general status of the equipment and the critical components.	ROD, S	ROD		
AMSTH-5.1 -020	Two TRPs have been defined for the Tracker Thermal Control Box (TTCB) TRPs , located respectively on TTCB radiator, and on TTCB baseplate (see Fig. 5-1 and Fig. 5-2)	ROD, S	ROD		

Questo documento contiene informazioni di proprietà di CARLO GAVAZZI SPACE SpA. Tutti i diritti sono riservati.
All information contained in this document are property of CARLO GAVAZZI SPACE SpA. All right reserved.

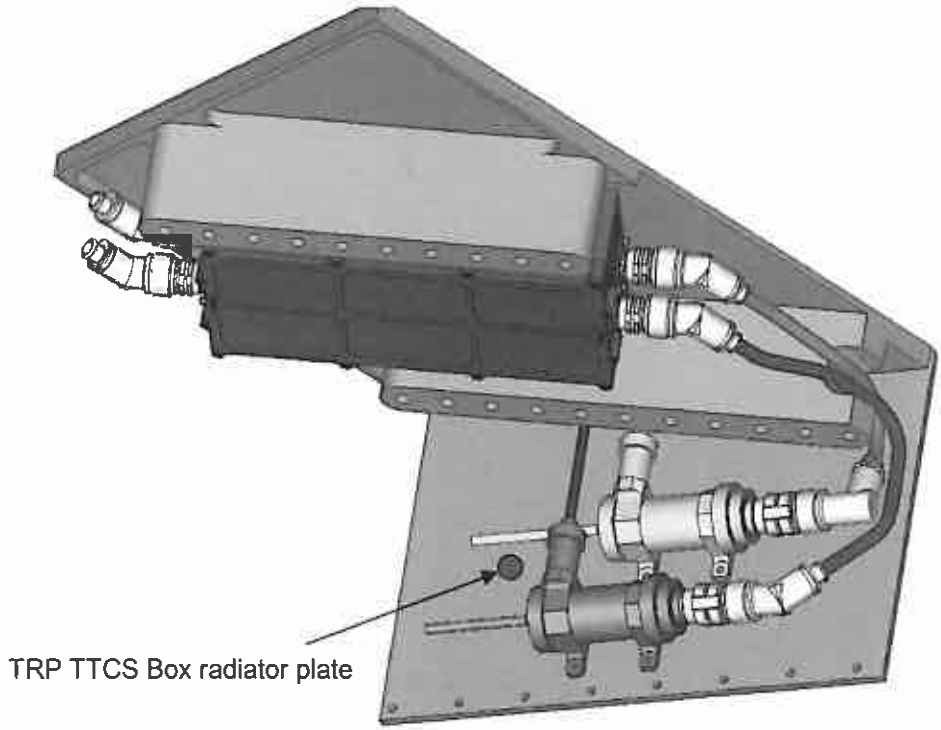

Fig. 5-1 - TRP TTCS Box radiator plate

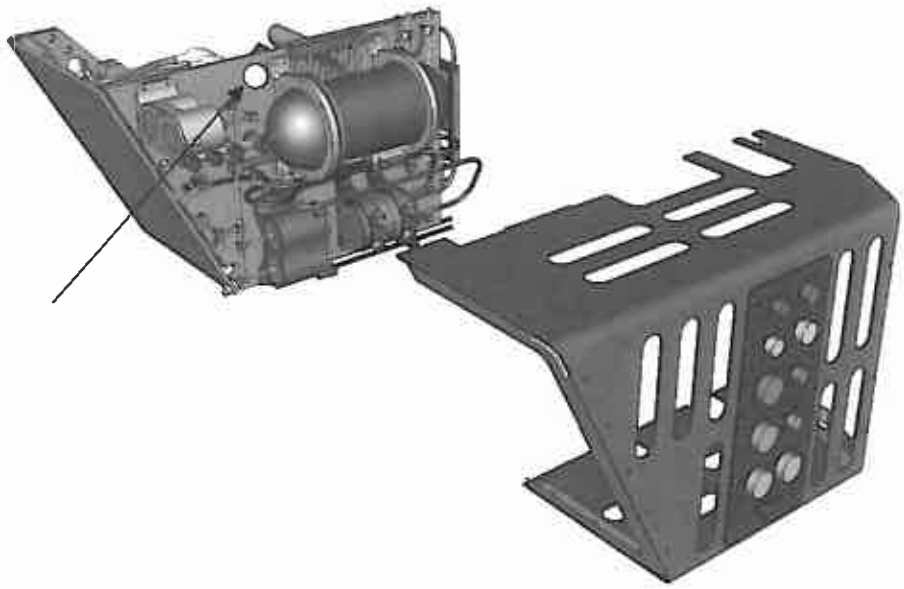

Fig. 5-2 - TRP TTCS Box

5.2 TEMPERATURE RANGES

Req. Id. N.	Requirement	EQ	SS	SY	Remarks
AMSTH-5.2 -010	The operative temperature of silicon wafers shall be: from -10 °C to +25 °C.	S			AMS01 heritage

Questo documento contiene informazioni di proprietà di CARLO GAVAZZI SPACE SpA. Tutti i diritti sono riservati.
All information contained in this document are property of CARLO GAVAZZI SPACE SpA. All right reserved.

Req. Id. N.	Requirement	EQ	SS	SY	Remarks
AMSTH-5.2 -015	The minimum switch on temperature of silicon wafers shall be -20 °C TBC by INFN (Tracker).	S, T			
AMSTH-5.2 -020	The non operative temperature of silicon wafers shall be: from -20 °C to +40 °C.	S, T			
AMSTH-5.2 -030	The operative temperature of hybrids shall be: from -10 °C to +25 °C.		S, T, A		
AMSTH-5.2 -035	The minimum switch on temperature of hybrids shall be -20°C		S		AMS01 heritage + Tracker subsystem considerations + test campaign
AMSTH-5.2 -040	The non operative temperature of hybrids shall be: from -20 °C to +40 °C.		T		
AMSTH-5.2 -050	The operative temperature of evaporator shall be: from -10 °C to +25 °C.	T	A		
AMSTH-5.2 -060	The non operative temperature of evaporator shall be: from -40 °C to +80 °C.	T			
AMSTH-5.2 -070	The operative temperature of condenser shall be: from -50 °C to +25 °C.		A		
AMSTH-5.2 -080	The non operative temperature of condenser shall be: from -100 °C to +80 °C.	T			Freezing tests
AMSTH-5.2 220	The maximum temperature of the unloaded radiator shall not exceed +5°C.			A	
AMSTH-5.2 230	The temperature of the condenser before running the loop shall be above -40°C			A	
AMSTH-5.2 240	The minimum temperature of the long period un-powered loop-connected TTCB components shall be for safety reasons above –40°C		A		
AMSTH-5.2 250	The minimum temperature of the manifolds shall be for safety reasons above –50°C in the extreme cold case.		A		
AMSTH-5.2 260	The working Tracker loop fluid operative range is -15°C to + 15°C		A		2 phase simulation

Questo documento contiene informazioni di proprietà di CARLO GAVAZZI SPACE SpA. Tutti i diritti sono riservati.
All information contained in this document are property of CARLO GAVAZZI SPACE SpA. All right reserved.

5.3 SHORT-TERM TEMPERATURE STABILITY

Req. Id. N.	Requirement	EQ	SS	SY	Remarks
AMSTH-5.3 -010	The peak-to-peak temperature variation along one orbit for the silicon wafers shall be within 3°C.		A		

5.4 TEMPERATURE GRADIENTS

Req. Id. N.	Requirement	EQ	SS	SY	Remarks
AMSTH-5.4 -010	The spatial temperature gradient between the Tracker elements shall not exceed 10°C.		A	T	

5.5 HEAT DISSIPATION

Req. Id. N.	Requirement	EQ	SS	SY	Remarks
AMSTH-5.5 -010	The total amount of power generated by hybrids is 144 W (± 10%).		ROD, T	T	
AMSTH-5.5 -011	The maximum power dissipated by the pump is 10 W	ROD, T		T	
AMSTH-5.5 -012	The maximum power dissipated by the pump electronics (mounted on the TTCB baseplate) is 5 W	ROD, T		T	
AMSTH-5.5 -013	The maximum power dissipated by the APS/DPS is 0.2 W each	ROD, T		T	
AMSTH-5.5 -014	The maximum heat dissipated by the accumulator control is 75 Watt heater power and 100 W Peltier power	ROD, T		T	
AMSTH-5.5 -020	An active cooling loop (called TTCS, Tracker Thermal Control System) shall collect the dissipated power and bring it to dedicated Ram and Wake tracker radiators.		ROD		At TTCS level
AMSTH-5.5 -030	The extra heat (generated by components of the cooling loop as pumps and pre-heaters located in the TTCB), shall be brought, via the loop, to the same radiators.		A		
AMSTH-5.5 -040	The extra power generated in the loop shall be lower than 50 Watt, depending on the temperature of the radiator.		A	T	
AMSTH-5.5 -050	Tracker thermal cooling system shall absorb Star Tracker dissipation.		A		See also star tracker requirements

Questo documento contiene informazioni di proprietà di CARLO GAVAZZI SPACE SpA. Tutti i diritti sono riservati.
All information contained in this document are property of CARLO GAVAZZI SPACE SpA. All right reserved.

5.5.1 HEATERS

Req. Id. N.	Requirement	EQ	SS	SY	Remarks
AMSTH-5.5.1 -010	The 28V Pre-heaters consumption shall be according to RD[7]		A, T	T	
AMSTH-5.5.1 -015	The 28V Cold orbit heaters consumption shall be according to RD[7]		A, T	T	
AMSTH-5.5.1 -020	The 28V Start-up heaters consumption shall be according to RD[7]	"	A, T	T	
AMSTH-5.5.1 -025	The 28V Accumulator (control and emergency) heaters consumption shall be according to RD[7]	"	A, T	T	
AMSTH-5.5.1 -030	The 120V Tracker radiator and condenser heaters consumption shall be according to RD[7]		A	T	
AMSTH-5.5.1 -035	The 28V TTCS liquid line heaters consumption shall be according to RD[7]		A,T	T	

5.6 SUB DETECTOR THERMAL I/F DESCRIPTION

5.6.1 CONDUCTIVE

Req. Id. N.	Requirement	EQ	SS	SY	Remarks
AMSTH-5.6.1 -010	The Tracker shall be mechanically connected to 2 (top and bottom) x 4 (around periphery) points to the vacuum case, by means of titanium support feet providing an interface conductance of **27.5 mW/K** per foot.		ROD		
AMSTH-5.6.1 -020	A thermal link from the Tracker hybrids (front-end) to the 8 crates is due to the cables. Eight bundles of approx 3 meter long cables connect the tracker hybrids (front-ends) to the 8 crates. Each bundle shall consist of 48 flat cables with 1.1 * 39.5 mmcross section per cable. A well packed bundle will have a cross section of about 5cm * 4cm. The thermal conductance is estimated in 16 mW/K for each 3 meter long bundle (total 128 mW/K). In system thermal model the link is neglected. It shall be used by TTCS detailed model for parasitic heat leak estimate to the loop.		ROD		

Questo documento contiene informazioni di proprietà di CARLO GAVAZZI SPACE SpA. Tutti i diritti sono riservati.
All information contained in this document are property of CARLO GAVAZZI SPACE SpA. All right reserved.

5.6.2 RADIATIVE

Req. Id. N.	Requirement	EQ	SS	SY	Remarks
AMSTH-5.6.2 -010	Tracker outer planes and Vacuum Case top and bottom conical flanges face MLI. They have an emissivity value based on carbon fiber without any surface treatment, namely 0.8.		ROD, I		

5.6.2.1 MLI

Req. Id. N.	Requirement	EQ	SS	SY	Remarks
AMSTH-5.6.2.1 -010	The lower plane of the Tracker shall be protected from the external environment by means of 7 layers of MLI blanket, (see Fig. 5-3)		ROD, I		
AMSTH-5.6.2.1 -030	Tracker lower disk MLI shall weigh less than 1.8 Kg	T			

Questo documento contiene informazioni di proprietà di CARLO GAVAZZI SPACE SpA. Tutti i diritti sono riservati.
All information contained in this document are property of CARLO GAVAZZI SPACE SpA. All right reserved.

Fig. 5-3 - MLI covering the tracker bottom plane

5.6.2.2 RADIATOR

Req. Id. N.	Requirement	EQ	SS	SY	Remarks
AMSTH-5.6.2.2 -010	The thermo optical properties of the external radiator surfaces is white paint (see par. 16).		ROD, I		

5.6.2.2.1 MECHANICAL DESIGN

Req. Id. N.	Requirement	EQ	SS	SY	Remarks
AMSTH-5.6.2.2.1-010	Tracker radiators shall be tilted 45.1° with respect to plane XY.			ROD	
AMSTH-5.6.2.2.1-020	Tracker radiators shall have a trapezium shape, with the following dimensions: Major basis : 2600 mm Minor basis : 2127 mm Height : 518.6 mm Area: 1.226 m^2		ROD,T		
AMSTH-5.6.2.2.1-030	Tracker radiators shall be composed by a 14 mm thick ROHACELL 51 WF foam, with 2 aluminum face sheets on both sides, the inner 0.2 mm thick, the outer 0.8 mm thick.		ROD		
AMSTH-5.6.2.2.1-040	Tracker radiators mass (each): 13kg.		T		
AMSTH-5.6.2.2.1-050	Tracker radiators rods mass: 5.5kg.		T		
AMSTH-5.6.2.2.1-060	Seven heat pipes are embedded in each Tracker radiator panel, with a pitch of 70 mm.		ROD		

Questo documento contiene informazioni di proprietà di CARLO GAVAZZI SPACE SpA: Tutti i diritti sono riservati
All information contained in this document are property of CARLO GAVAZZI SPACE SpA. All right reserved.

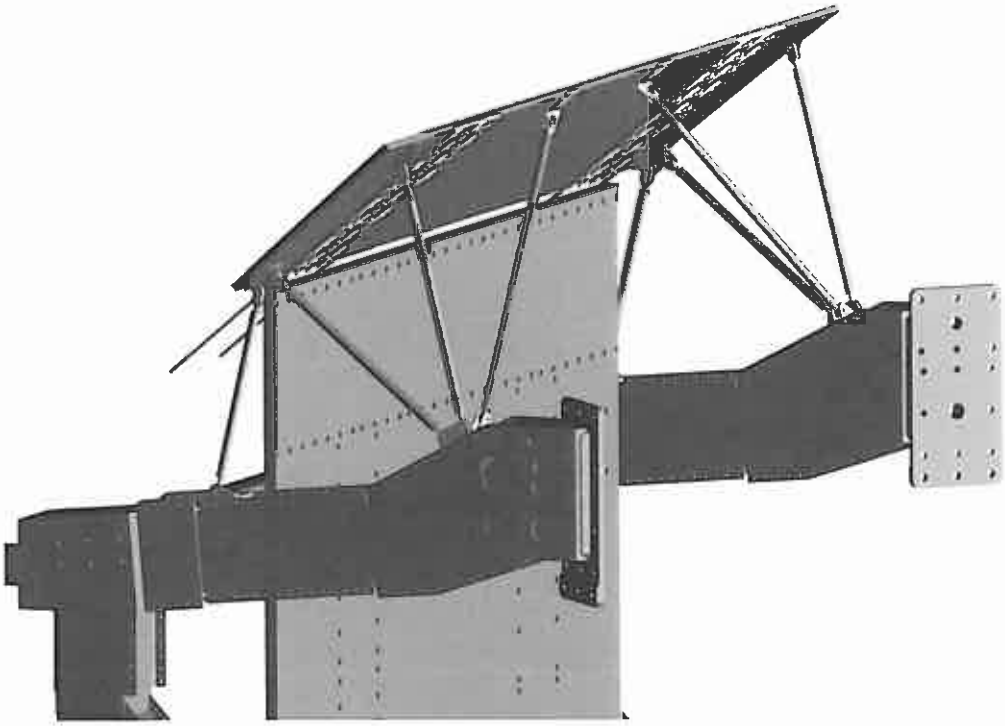

Fig. 5-4 - Tracker radiator fixation to the USS-02

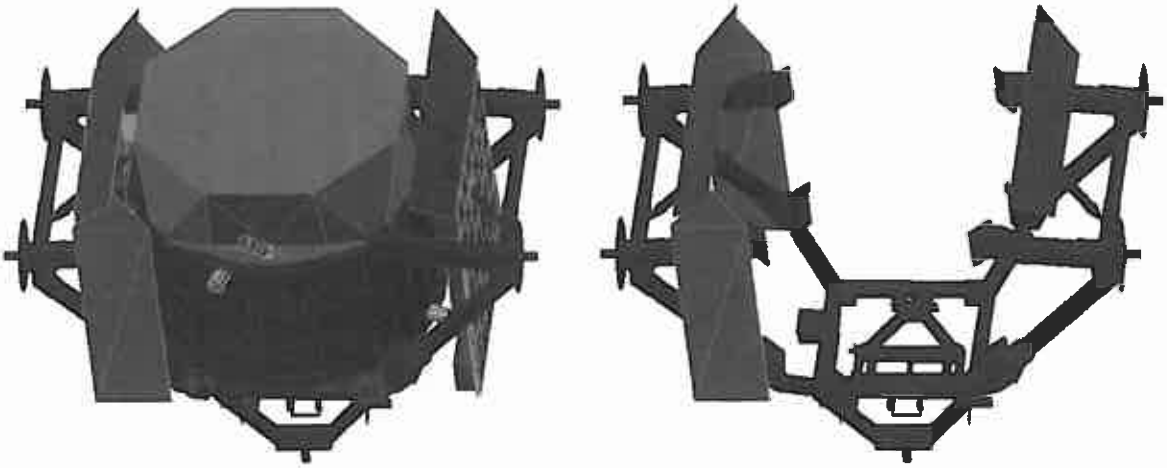

Fig. 5-5 - Tracker radiators, in red

5.6.2.2.2 RADIATOR INTERFACES

5.6.2.2.2.1 RADIATIVE

Req. Id. N.	Requirement	EQ	SS	SY	Remarks

Questo documento contiene informazioni di proprietà di CARLO GAVAZZI SPACE SpA. Tutti i diritti sono riservati.
All information contained in this document are property of CARLO GAVAZZI SPACE SpA. All right reserved.

Req. Id. N.	Requirement	EQ	SS	SY	Remarks
AMSTH-5.6.2.2.2.1-010	Backward radiation is minimized by means of 7 MLI blankets, 1 Beta Cloth layer. Its external t/o properties shall be Beta Cloth (see par. 16)		ROD	I	
AMSTH-5.6.2.2.2.1-020	Tracker radiator MLI shall weigh less than 0.8 Kg per each radiator (total = 1.6 Kg)	T			
AMSTH-5.6.2.2.2.1-030	Tracker radiator rods shall be protected by a single layer of Beta Cloth		ROD		
AMSTH-5.6.2.2.2.1-040	Tracker radiator rods Beta Cloth shall weigh in total less than 0.9 kg for all the 16 rods	T			

5.6.2.2.2.2 CONDUCTIVE

Req. Id. N.	Requirement	EQ	SS	SY	Remarks
AMSTH-5.6.2.2.2.2-010	The conduction from the radiator to the USS shall be lower than 0.1 W/K for each fixation point. The rods are modeled as a network, according to *Fig. 5-7*.	ROD			
AMSTH-5.6.2.2.2.2-020	The mechanical interface between the Tracker CO_2 loop condensers and the radiator shall be showed in a dedicated ICD (see Fig. 5-8). Two condensers assemblies are placed behind each radiator (four condensers assemblies in total). The interface is provided by means of 98 bolts (X 2) on each radiator, according to the cross section in *Fig. 5-9*.		ROD		

Questo documento contiene informazioni di proprietà di CARLO GAVAZZI SPACE SpA. Tutti i diritti sono riservati.
All information contained in this document are property of CARLO GAVAZZI SPACE SpA. All right reserved.

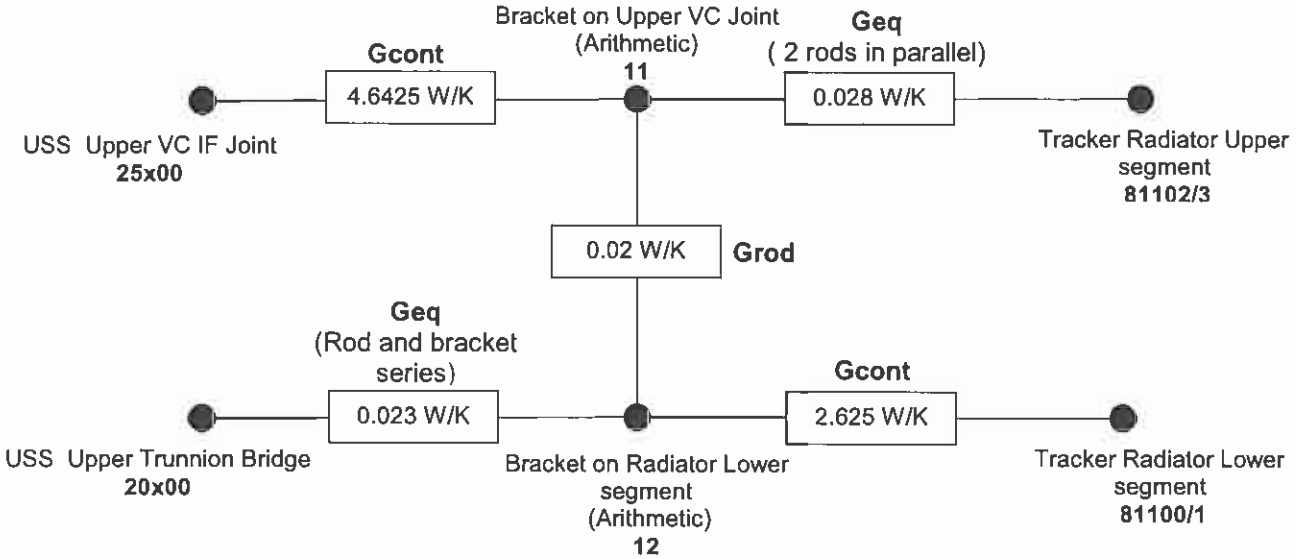

Fig. 5-6 - Rod network scheme

with the following nodalization for the Tracker Radiator:

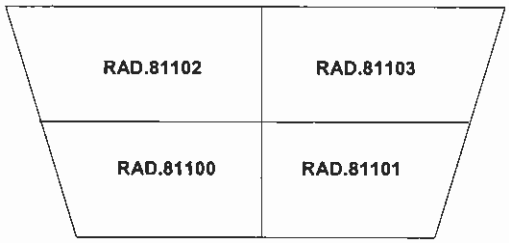

Fig. 5-7 - Tracker radiator bracket network

See drawing 45-AMS02TCS-000.00.01, Tracker radiator ICD.

Fig. 5-8 - Mechanical interface between the condenser and the radiator.

Questo documento contiene informazioni di proprietà di CARLO GAVAZZI SPACE SpA. Tutti i diritti sono riservati.
All information contained in this document are property of CARLO GAVAZZI SPACE SpA. All right reserved.

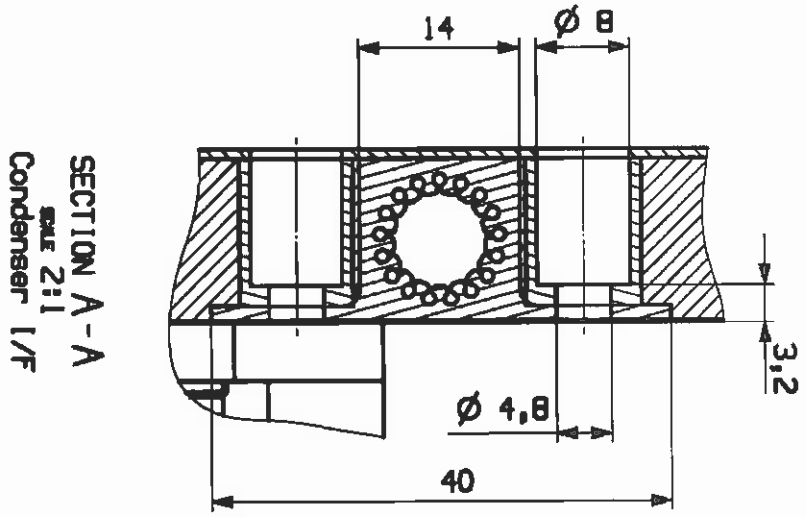

Fig. 5-9 - Condenser mounting concept (cross section)

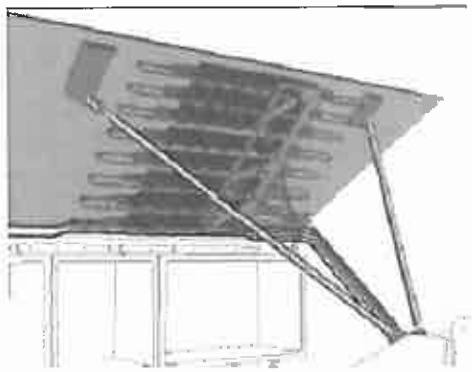

Fig. 5-10 - Tracker CO2 cooling loop condenser on the radiator

5.6.2.3 TTCS PIPE ROUTING

Req. Id. N.	Requirement	EQ	SS	SY	Remarks
AMSTH-5.6.2.3 –010	The 2 TTCS loops (Main and redundant) are mechanically supported by two dedicated CFRP beams. One of these two beams is shared with TTCS tubing.		ROD		
AMSTH-5.6.2.3 –020	The non-shared beam shall weigh 2.5 kg	T			
AMSTH-5.6.2.3 –030	Pipes and supporting tubes shall be wrapped in MLI		ROD		

Questo documento contiene informazioni di proprietà di CARLO GAVAZZI SPACE SpA. Tutti i diritti sono riservati.
All information contained in this document are property of CARLO GAVAZZI SPACE SpA. All right reserved.

5.7 HEAT EXCHANGE REQUIREMENTS WITH NEIGHBORING SUBDETECTORS

Req. Id. N.	Requirement	EQ	SS	SY	Remarks
AMSTH-4.6-010	The goal is to have a negligible amount of power radiated in ZENITH (toward Upper TOF/TRD) – NADIR directions (toward Lower TOF), hence upper and lower Tracker honeycomb planes shall be covered by MLI		ROD		

Questo documento contiene informazioni di proprietà di CARLO GAVAZZI SPACE SpA. Tutti i diritti sono riservati.
All information contained in this document are property of CARLO GAVAZZI SPACE SpA. All right reserved.

5.8 TTCB

Req. Id. N.	Requirement	EQ	SS	SY	Remarks
AMSTH-5.8 -010	Temperature Operational range For electronic: -20 °C ÷+85°C For USSI/F: -40 °C ÷+55°C For fluid: -15 °C ÷+15°C	T	A		Analysis for USS I/F and fluid
AMSTH-5.8 -020	Temperature Non operational range For electronic: -40 °C ÷+105°C For USSI/F: -40 °C ÷+55°C For fluid: -100 °C ÷+65°C	T	A		Ditto
AMSTH-5.8 -030	Temperature Start-up range For USSI/F (TBC): -40 °C ÷+10°C For fluid: -40 °C ÷+20°C(accumulator start-up temperature)	T	A, T		Accumulator test, TTCS test
AMSTH-5.8 -040	Heat dissipation 104 W(of which 50 W preheating)		A, T		
AMSTH-5.8 -050	Mechanical Design (Primary box) Fixation point: USS02		ROD	ROD	
AMSTH-5.8 -060	Mechanical Design (Secondary box) Fixation point: USS02		ROD	ROD	
AMSTH-5.8 -070	Thermal I/F Through C02 fluid loop		ROD		

5.9 TTCS WEIGHT

Req. Id. N.	Requirement	EQ	SS	SY	Remarks
AMSTH-5.9 -010	TTCS, including the TTCB and the condensers, shall weigh less than 65.9 Kg	ROD, T			

Questo documento contiene informazioni di proprietà di CARLO GAVAZZI SPACE SpA. Tutti i diritti sono riservati.
All information contained in this document are property of CARLO GAVAZZI SPACE SpA. All right reserved.

6. STAR TRACKER

6.1 TEMPERATURE REFERENCE POINT

Req. Id. N.	Requirement	EQ	SS	SY	Remarks
AMSTH-6.1 -010	All the temperature requirements of the STAR TRACKER sub-detector shall refer to Temperature Reference Points (TRP). The Star Tracker TRP is located on electronic boards frames. Its temperature can be related to the general status of the equipment and the critical components	ROD, S	ROD		

6.2 TEMPERATURE RANGES

Req. Id. N.	Requirement	EQ	SS	SY	Remarks
AMSTH-6.2 -010	The operative temperature range of the camera (CCD) shall be: from -30°C to +55°C.	T	A		
AMSTH-6.2 -020	The best performance operative temperature range of the camera (CCD) shall be: from -30°C to +35°C.	T	T, A		Frequency of "best performance range occurrence" needed
AMSTH-6.2 -030	The non operative temperature range of the camera (CCD) shall be: from -40°C to +80°C.	T	A		
AMSTH-6.2 -040	The operative temperature range of the electronic board shall be: from -20°C to +55°C.	T	A		
AMSTH-6.2 -050	The non operative temperature range of the electronic board shall be: from -40°C to +80°C.	T	A		
AMSTH-6.2 -060	The operative temperature range of the lens shall be: from –20°C to +55°C.	T	A		
AMSTH-6.2 -070	The non operative temperature range of the lens shall be: from -40°C to +60°C	T	A		
AMSTH-6.2 -080	Baffles temperature range shall be : from -100°C to +100°C		A		

Questo documento contiene informazioni di proprietà di CARLO GAVAZZI SPACE SpA. Tutti i diritti sono riservati.
All information contained in this document are property of CARLO GAVAZZI SPACE SpA. All right reserved.

6.3 HEAT DISSIPATION

Req. Id. N.	Requirement	EQ	SS	SY	Remarks
AMSTH-6.3 -010	Power dissipation is 3.7W for each Star Tracker (0.2W in CCD, 0.5W in CCD board, 3W in electronic boards).		T		

6.4 MECHANICAL DESIGN

Req. Id. N.	Requirement	EQ	SS	SY	Remarks
AMSTH-6.4 -010	Baffle is mounted separately to the TRD "M" structure.		ROD		

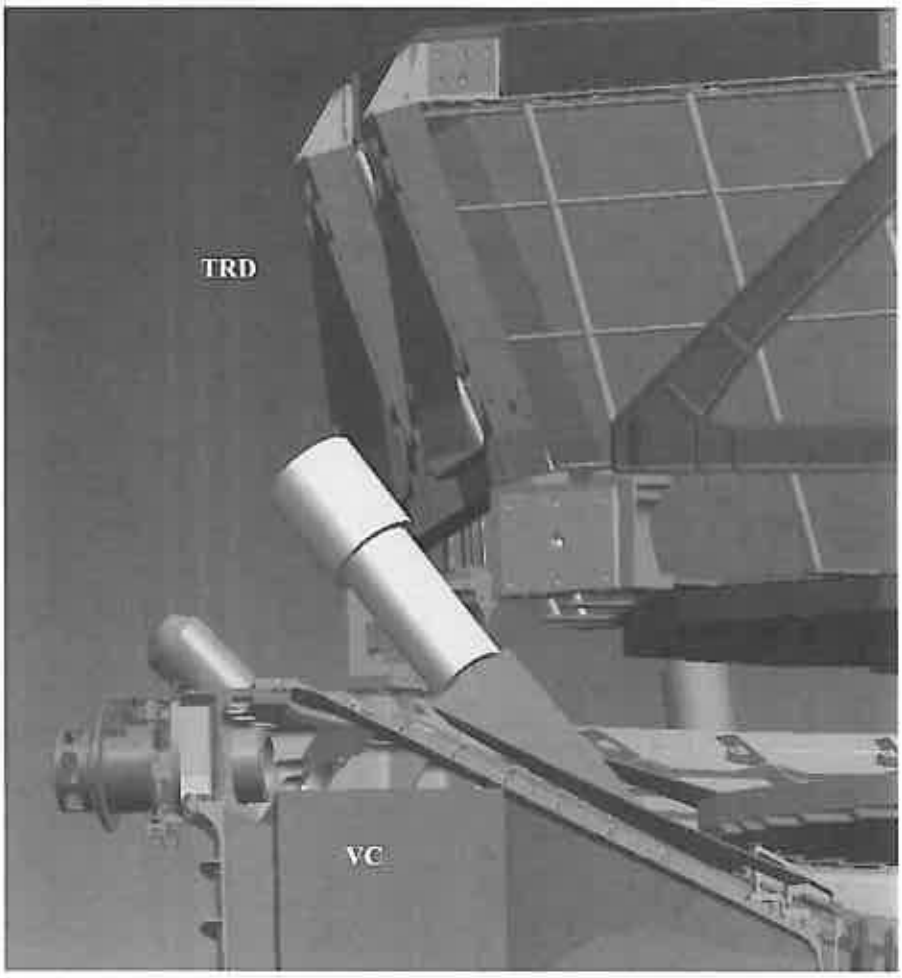

Fig. 6-1 - Star tracker assembly on AMS-02.

Questo documento contiene informazioni di proprietà di CARLO GAVAZZI SPACE SpA. Tutti i diritti sono riservati.
All information contained in this document are property of CARLO GAVAZZI SPACE SpA. All right reserved.

6.5 SUB DETECTOR THERMAL I/F DESCRIPTION

6.5.1 CONDUCTIVE

Req. Id. N.	Requirement	EQ	SS	SY	Remarks
AMSTH-6.5.1 -010	Copper strips are present to take power from CCD and electronics to copper braids connected to two TTCS evaporator blocks.		ROD		

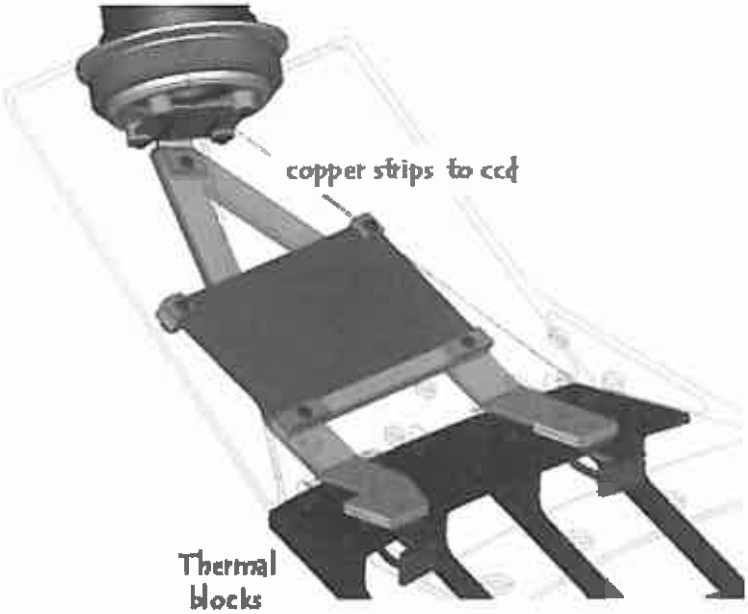

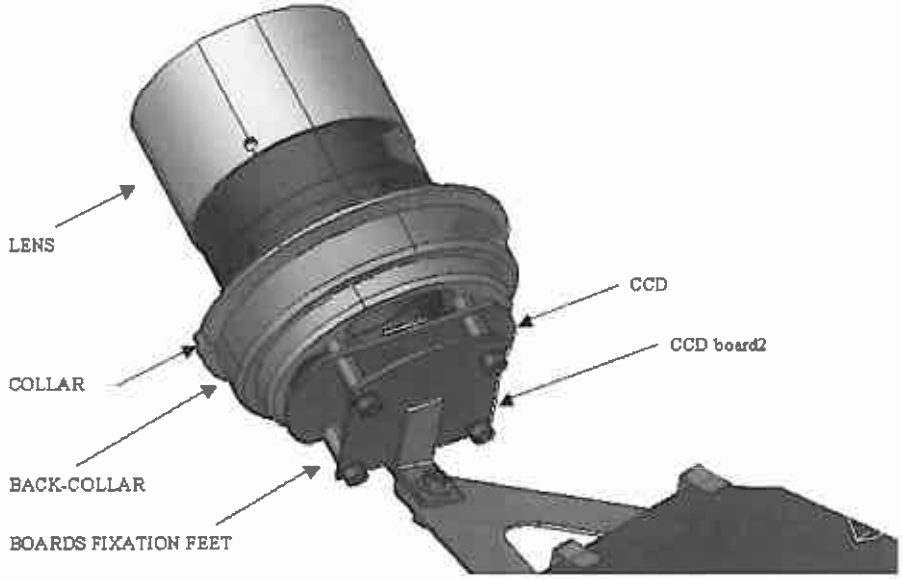

Fig. 6-2 - Star Tracker thermal I/F.

Questo documento contiene informazioni di proprietà di CARLO GAVAZZI SPACE SpA. Tutti i diritti sono riservati.
All information contained in this document are property of CARLO GAVAZZI SPACE SpA. All right reserved.

6.5.2 RADIATIVE

Req. Id. N.	Requirement	EQ	SS	SY	Remarks
AMSTH-6.5.2 -010	Baffle t/o properties internal: black anodized external: silver Teflon tape 5 mils (see par. 16)		ROD, I		
AMSTH-6.5.2 -020	ASTS shall be completely wrapped, by MLI. The outer layer shall be composed by Beta Cloth. (see par. 16)		ROD; I		
AMSTH-6.5.2 -030	Star tracker MLI shall weigh less than 0.3 Kg	T			

6.6 HEAT EXCHANGE REQUIREMENTS WITH NEIGHBORING SUBDETECTORS

Req. Id. N.	Requirement	EQ	SS	SY	Remarks
AMSTH-6.6 –0.10	Star Tracker heat rejection towards the TRD M structure shall be minimized		ROD		

Questo documento contiene informazioni di proprietà di CARLO GAVAZZI SPACE SpA. Tutti i diritti sono riservati.
All information contained in this document are property of CARLO GAVAZZI SPACE SpA. All right reserved.

7. ACC

7.1 TEMPERATURE REFERENCE POINT

Req. Id. N.	Requirement	EQ	SS	SY	Remarks
AMSTH-7.1 -010	The ACC TRP is located on ACC PMTs. Their temperatures can be related to the general status of the equipment and the critical components.	ROD, S	ROD		

7.2 TEMPERATURE RANGES

Req. Id. N.	Requirement	EQ	SS	SY	Remarks
AMSTH-7.2 -010	The operative temperature range of the ACC panel shall be: from -30°C to +40°C	S, T	T		No ACC PMT thermal model exist
AMSTH-7.2 -020	The non operative temperature range of the ACC panel shall be: from -40°C to +40°C	S, T			ditto
AMSTH-7.2 -030	The operative temperature range of the ACC PMTs shall be: from -30°C to +45°C	S, T			
AMSTH-7.2 -040	The non operative temperature range of the ACC PTMs shall be: from -35°C to +50°C	S, T			

7.3 HEAT DISSIPATION

Req. Id. N.	Requirement	EQ	SS	SY	Remarks
AMSTH-7.3 –010	Heat dissipation of 0.05W per PMTs mounted on Vacuum Case conical flange.		T		

7.4 MECHANICAL DESIGN

Req. Id. N.	Requirement	EQ	SS	SY	Remarks
AMSTH-7.4 –010	The PMTs location is directly on the vacuum case conical flange, arranged in four couples of small boxes, two on upper conical flange and two on lower conical flange.		ROD		

Questo documento contiene informazioni di proprietà di CARLO GAVAZZI SPACE SpA. Tutti i diritti sono riservati.
All information contained in this document are property of CARLO GAVAZZI SPACE SpA. All right reserved.

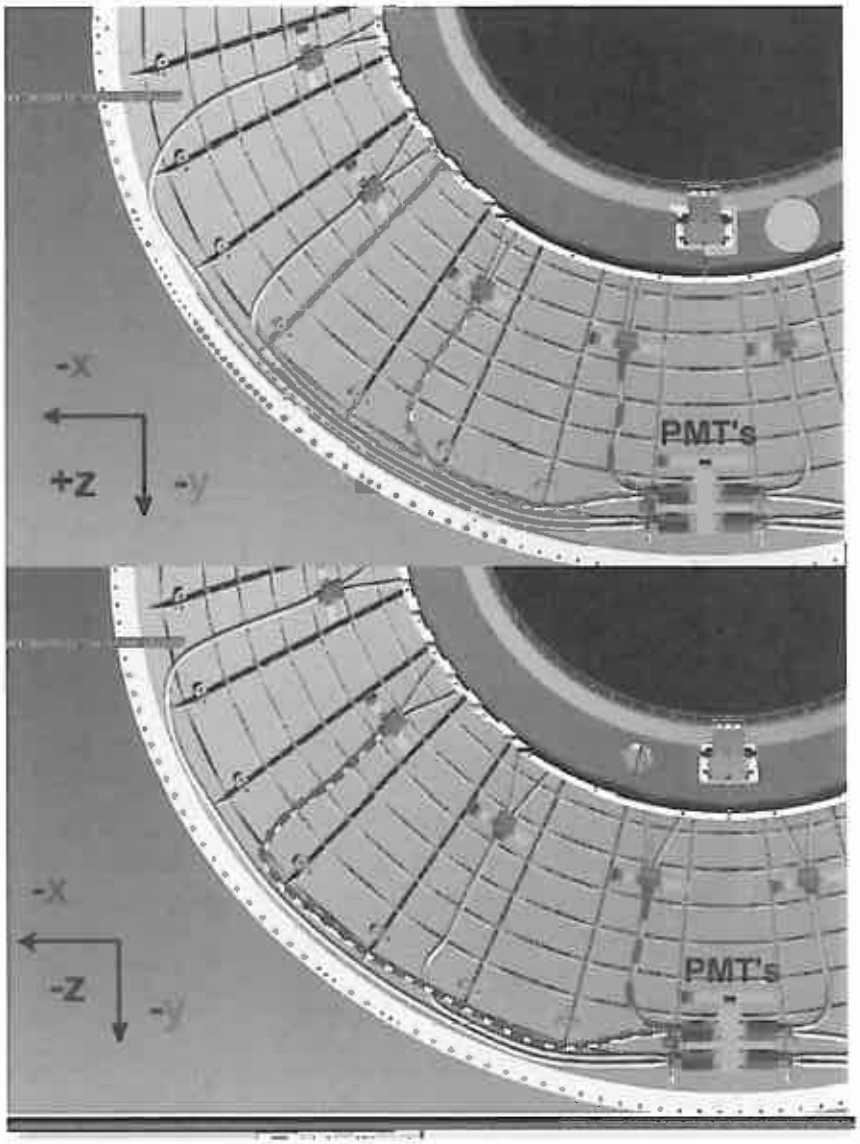

Fig. 7-1 - ACC PMTs location

7.5 SUB DETECTOR THERMAL I/F DESCRIPTION

7.5.1 CONDUCTIVE

Req. Id. N.	Requirement	EQ	SS	SY	Remarks
AMSTH-7.5.1 -010	The scintillator modules are sector wise in contact with the inner wall of the VC.		ROD		
AMSTH-7.5.1 -020	The PMTs boxes shall be decoupled from the vacuum case with an interface conductance lower than 0.1 W/K. A conductance of 0.025 W/K have been measured with aluminum-to-aluminum contact in a vacuum test.	T	ROD		

Questo documento contiene informazioni di proprietà di CARLO GAVAZZI SPACE SpA. Tutti i diritti sono riservati.
All information contained in this document are property of CARLO GAVAZZI SPACE SpA. All right reserved.

7.5.2 RADIATIVE

Req. Id. N.	Requirement	EQ	SS	SY	Remarks
AMSTH-7.5.2 -010	Outer scintillator surface is a Polyester Fabric (Trevira) with Acrylat Foam.		ROD		
AMSTH-7.5.2 -020	The CFC stabilizing cylinder inner surface (pointing to the tracker) will be coated with low emissivity ($\varepsilon < 0.1$) material (e.g. aluminium tape).		ROD, I		

8. ELECTRONICS[1]

8.1 TEMPERATURE REFERENCE POINT

Req. Id. N.	Requirement	EQ	SS	SY	Remarks
AMSTH-8.1 -010	All the temperature requirements of the electronics shall refer to Temperature Reference Points (TRP). The TRP is: - for the standard crates and XPD at radiator interface on the box (e.g. feet) - for the PDS on the baseplate - For HV bricks its each sub module's frame temperature. For items not specifically mentioned the TRP is any temperature of the unit, assumed isothermal.	ROD	ROD		

8.2 TEMPERATURE ACCEPTANCE RANGES

Req. Id. N.	Requirement	EQ	SS	SY	Remarks
AMSTH-8.2 -010	Standard crates: Operational range -20°C ÷ +50°C	T, S	A		
AMSTH-8.2 -020	Standard crates: Non operational range -40°C ÷ +80°C	T, S	A		
AMSTH-8.2 -030	XPD: Operational range -20°C ÷ +50°C	T, S	A		
AMSTH-8.2 -031	J crate: Operational range -25°C ÷ +50°C	T, S	A		

[1] For the Electronics section the terms EQUIPMENT and SUBSYSTEM acquire a different meaning. The EQUIPMENT is intended as the electronic assembly (e.g. PDS with all the boards included) and the SUBSYSTEM is intended as the electronic assembly integrated with the supporting/radiating structure (e.g. the crates/XPD and the radiator on which they are mounted). As an example, the CCEB shall be tested to the specified range +/- 5°C and an integrated analysis with the box mounted on the radiator shall show the specified range is met.

Questo documento contiene informazioni di proprietà di CARLO GAVAZZI SPACE SpA. Tutti i diritti sono riservati.
All information contained in this document are property of CARLO GAVAZZI SPACE SpA. All right reserved.

Req. Id. N.	Requirement	EQ	SS	SY	Remarks
AMSTH-8.2 -032	JT crate: Operational range -25°C ÷ +50°C	T, S	A		
AMSTH-8.2 -033	JPD crate: Operational range -25°C ÷ +50°C	T, S	A		
AMSTH-8.2 -040	XPD: Non operational range -40°C ÷ +80°C	T, S	A		
AMSTH-8.2 -050	CCEB Operational range -30°C ÷ +50°C	T	A		
AMSTH-8.2 -060	CCEB Non operational range -40°C ÷ +80°C	T	A		
AMSTH-8.2 -070	PDS Operational range -25°C ÷ +48°C	T	A		
AMSTH-8.2 -080	PDS Non operational range -40°C ÷ +80°C	T	A		
AMSTH-8.2 -090	TAS Operational range -10°C ÷ +35°C	T	A		
AMSTH-8.2 -100	TAS Non operational range -25°C ÷ +50°C	T	A		
AMSTH-8.2 -220	GPS Operational range -20°C ÷ +55°C		A,T		
AMSTH-8.2 -230	GPS Non operational range -40°C ÷ +70°C		A,T		
AMSTH-8.2 -240	GPS antenna Operational range -70°C ÷ +70°C	S, T	A		
AMSTH-8.2 -250	GPS antenna Non operational range -80°C ÷ +80°C	S, T	A		
AMSTH-8.2 -260	Warm Helium Supply Operational range -73°C ÷ +49°C	T	A		See RD[5]
AMSTH-8.2 -270	Warm Helium Supply Non operational range -73°C ÷ +49°C	T	A		See RD[5]
AMSTH-8.2 -200	HV bricks Operational Range -20°C to +65°C	T	A		
AMSTH-8.2 -200	HV bricks Non Operational Range -35°C to +65°C	T	A		

Questo documento contiene informazioni di proprietà di CARLO GAVAZZI SPACE SpA. Tutti i diritti sono riservati.
All information contained in this document are property of CARLO GAVAZZI SPACE SpA. All right reserved.

8.3 SHORT-TERM TEMPERATURE STABILITY

Req. Id. N.	Requirement	EQ	SS	SY	Remarks
AMSTH-8.3 -010	5°C stability on orbit period.		A		

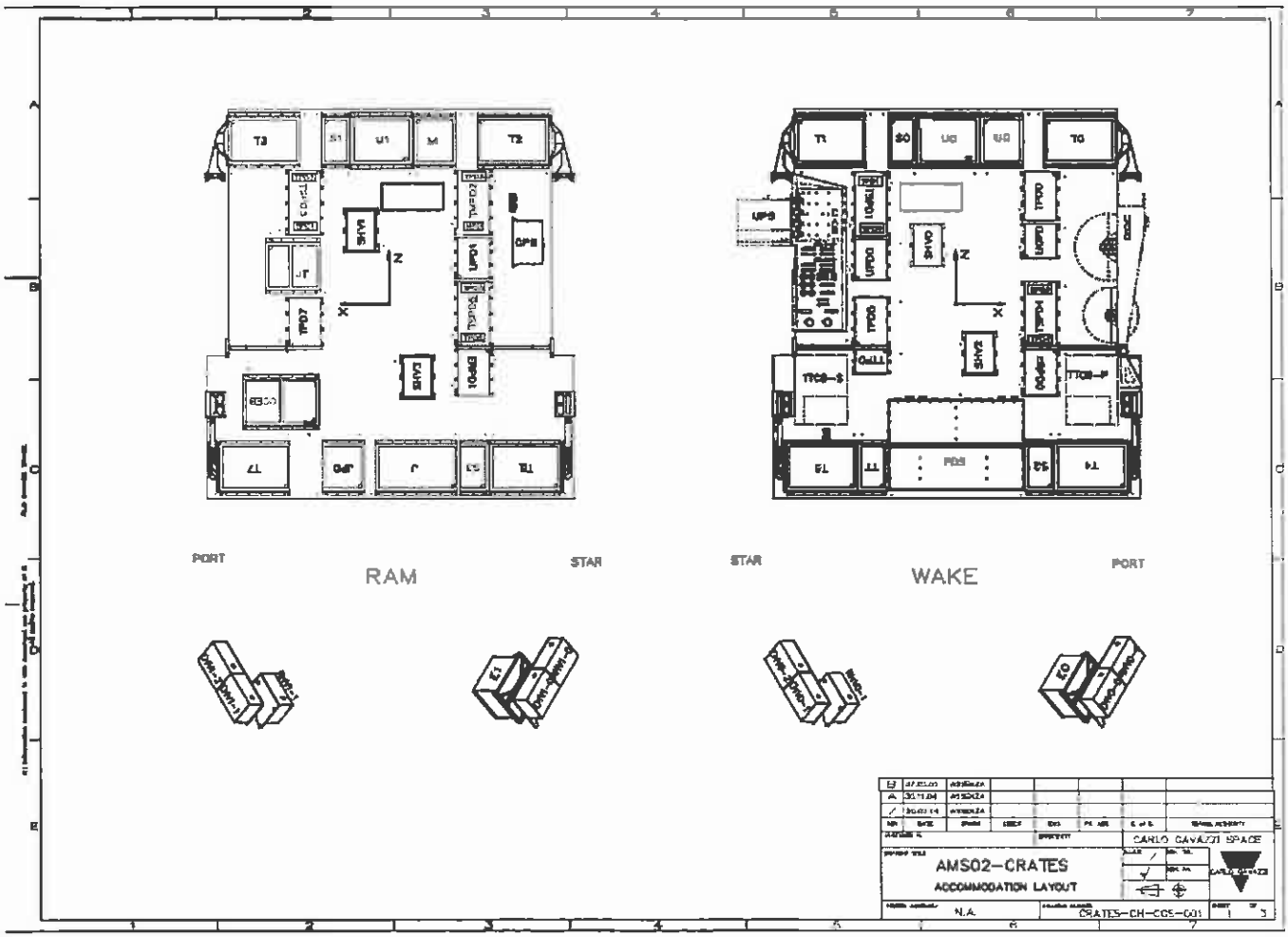

Fig. 8-1 - Crates accommodation.

Questo documento contiene informazioni di proprietà di CARLO GAVAZZI SPACE SpA. Tutti i diritti sono riservati.
All information contained in this document are property of CARLO GAVAZZI SPACE SpA. All right reserved.

8.4 HEAT DISSIPATION

8.4.1 STANDARD ELECTRONIC UNITS (CRATES + XPD)

Req. Id. N.	Requirement	EQ	SS	SY	Remarks
AMSTH-8.4.1 -000	For all the crates and XPDs heat dissipations see RD [4] issued on April 2005	T		T	Measurement at box and system level

8.4.2 NON STANDARD ELECTRONIC UNITS

Req. Id. N.	Requirement	EQ	SS	SY	Remarks
AMSTH-8.4.2 -020	PDS 352W	T, A		T	Peak power dissipation. Actual dissipation is function of the power profile supplied to AMS-02
AMSTH-8.4.2 -030	TAS 4.8 mW average; 1% duty cycle (~10 seconds every ~1000 seconds)	T			
AMSTH-8.4.2 -040	Warm Helium Supply 0W	ROD			RD[5]
AMSTH-8.4.2 -050	GPS 6W in operating nominal mode	S, T			
AMSTH-8.4.2 -060	HV bricks 2.8W for each ECAL HV(EHV) 2.8W for each RICH HV(RHV) 4.4W for each TOF HV (SHV)	T		T	SHV dissipation takes into account 5% of margin.
AMSTH-8.4.2 -070	CAB: see dedicated chapter (Section 9)				

Questo documento contiene informazioni di proprietà di CARLO GAVAZZI SPACE SpA. Tutti i diritti sono riservati.
All information contained in this document are property of CARLO GAVAZZI SPACE SpA. All right reserved.

8.5 MECHANICAL DESIGN: MASS AND SIZE

8.5.1 STANDARD ELECTRONIC UNITS (CRATES + XPD)

The information concerning the mechanical design of the standard crates and XPD is reported in the last Flight Design delivered by Mike Capell, dated April 2005.

8.5.2 NON STANDARD ELECTRONIC UNITS

Req. Id. N.	Requirement	EQ	SS	SY	Remarks
AMSTH-8.5.2 -010	CCEB Fixation point: Ram Radiator		ROD		
AMSTH-8.5.2 -020	PDS Fixation point: Wake Radiator		ROD		
AMSTH-8.5.2 -030	TAS (Tracker Alignment System) Fixation point: RAM radiator Inside M-Crate (TBC) (it's an electronic board)		ROD		
AMSTH-8.5.2 -040	Warm Helium Supply Fixation point: –Lower support ring of the vacuum case			ROD	RD[5]
AMSTH-8.5.2 -050	GPS Fixation point: Ram radiator		ROD		
AMSTH-8.5.2 -060	ECAL HV bricks Fixation Point: USS lower part			ROD	
AMSTH-8.5.2 -070	RICH HV bricks Fixation Point: USS lower part			ROD	
AMSTH-8.5.2 -080	TOF HV bricks Fixation Point: Main radiators, flat mounted		ROD		

Questo documento contiene informazioni di proprietà di CARLO GAVAZZI SPACE SpA. Tutti i diritti sono riservati.
All information contained in this document are property of CARLO GAVAZZI SPACE SpA. All right reserved.

8.6 ELECTRONIC UNITS THERMAL I/F DESCRIPTION

8.6.1 CONDUCTIVE

Crates are feet mounted on the radiator by means of the two main walls to which the boards are clamped.
XPDs are the Power Distribution units and they consist of a stack of modules. Three types of I-frame are available, classified by their dimensions, and used in accordance with their relative mounting board power dissipation. Boards with converters are provided with winged I-frame.

Req. Id. N.	Requirement	EQ	SS	SY	Remarks
AMSTH-8.6.1 -010	The equivalent thermal conductance linking the main wall to the radiator as a function of the length of the crate, for each crate wall is KL= 5.75 W $K^{-1}m^{-1}$, calculated considering a contact conductance of 500 W $K^{-1}m^{-2}$		ROD		
AMSTH-8.6.1 -020	Cho-therm is at the CRATE/RADIATOR interface.		ROD, I		
AMSTH-8.6.1 -030	The contact conductance between XPD base I-frame and the radiator is: KA= 800 W $K^{-1}m^{-2}$ Thermal filler is foreseen at XPD-radiator interface. (e.g. Cho-term)		ROD		
AMSTH-8.6.1 -050	ASTC: via TTCS CO2 loop, see relevant chapter.		ROD		
AMSTH-8.6.1 -070	PDS: Conduction to radiator		ROD		
AMSTH-8.6.1 -080	Warm Helium Supply: Conduction to Vacuum Case		ROD		
AMSTH-8.6.1 -090	GPS: Conduction to radiator with 8 fixation bolts M4.		ROD		
AMSTH-8.6.1 -100	ECAL HV bricks: Zirconium oxide washers to decouple from USS, direct radiation via its own radiator.			ROD	
AMSTH-8.6.1 -110	RICH HV bricks: Zirconium oxide washers to decouple from USS, direct radiation via its own radiator.			ROD	
AMSTH-8.6.1 -120	TOF HV bricks Conduction to radiator with 6 bolts #10-32		ROD		

Questo documento contiene informazioni di proprietà di CARLO GAVAZZI SPACE SpA. Tutti i diritti sono riservati.
All information contained in this document are property of CARLO GAVAZZI SPACE SpA. All right reserved.

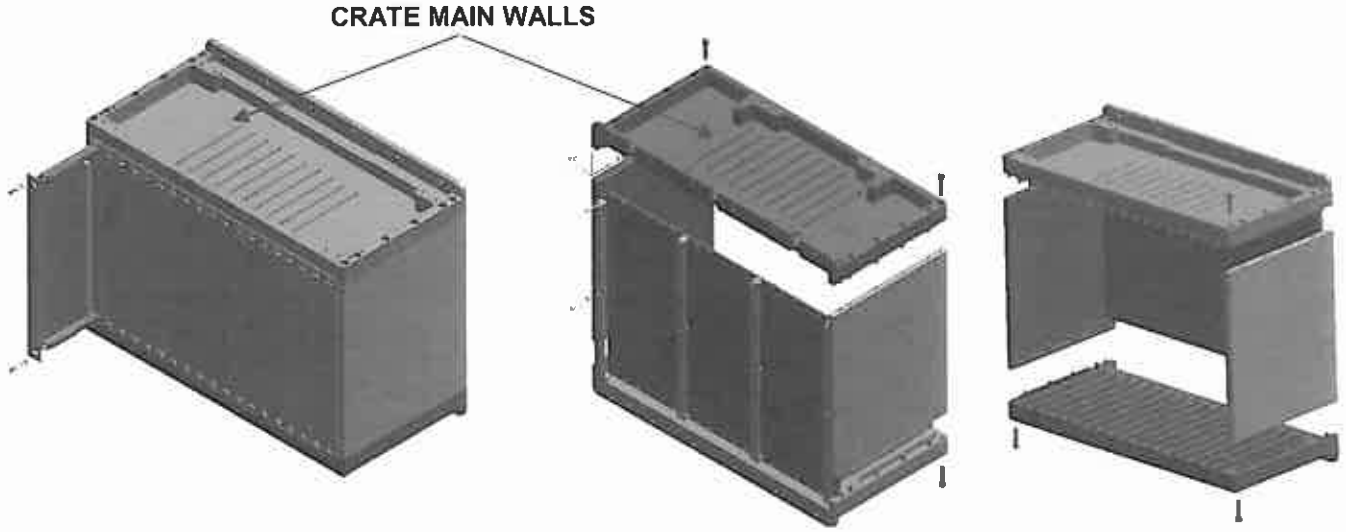

Fig. 8-2 - Interface radiator-crate

Fig. 8-3 - Interface radiator-XPD

8.6.2 RADIATIVE

8.6.2.1 MLI

Req. Id. N.	Requirement	EQ	SS	SY	Remarks
AMSTH-8.6.2.1 -010	MLI shall cover some crates walls, with external thermo optical properties as Beta Cloth (see par. 16) as shown in Fig. 8-4.		ROD, I		
MSTH-8.6.2.1 -020	The other crates walls shall be clear anodized (see par. 16).	ROD			
AMSTH-8.6.2.1 -030	ECAL crates need to be white painted on their main walls and side walls	ROD, I			
AMSTH-8.6.2.1 -040	ECAL and RICH HV bricks thermo optical properties are shown in Fig. 8-5	ROD, I			

Questo documento contiene informazioni di proprietà di CARLO GAVAZZI SPACE SpA. Tutti i diritti sono riservati.
All information contained in this document are property of CARLO GAVAZZI SPACE SpA. All right reserved.

Req. Id. N.	Requirement	EQ	SS	SY	Remarks
AMSTH-8.6.2.1 –050	MLI on crates/XPDs shall weigh less than 4.1 Kg	T			
AMSTH-8.6.2.1 -060	ECAL and RICH HV bricks MLI shall weigh less than 1 Kg	T			

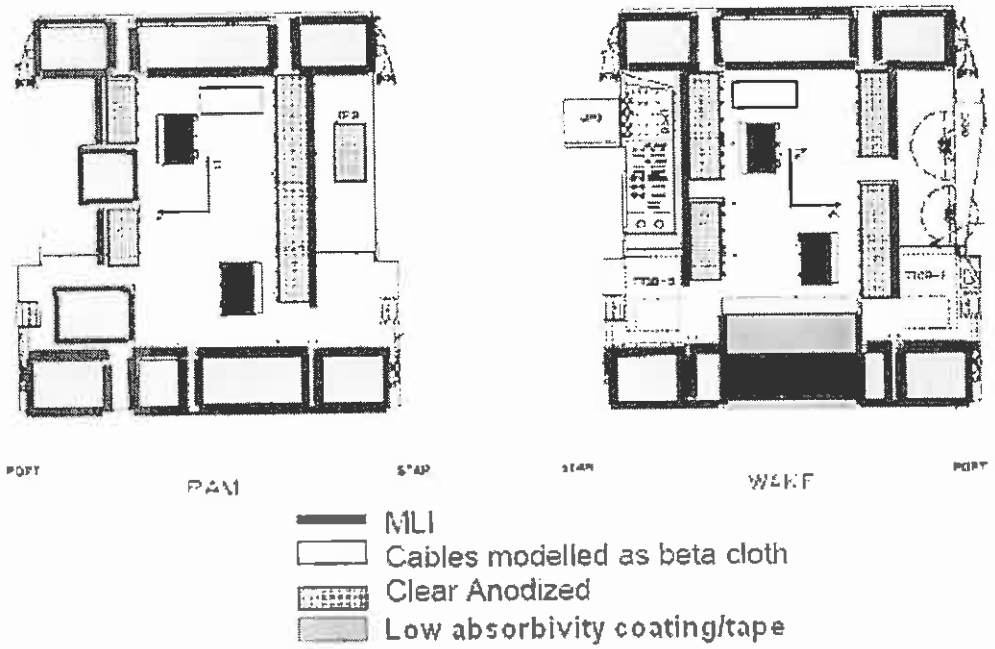

Fig. 8-4 - Thermo-optical properties on crates, XPD and Tof Hv on main radiators (PDS surface will be either coated or covered with low absorbivity painting/tape.)

Questo documento contiene informazioni di proprietà di CARLO GAVAZZI SPACE SpA. Tutti i diritti sono riservati.
All information contained in this document are property of CARLO GAVAZZI SPACE SpA. All right reserved.

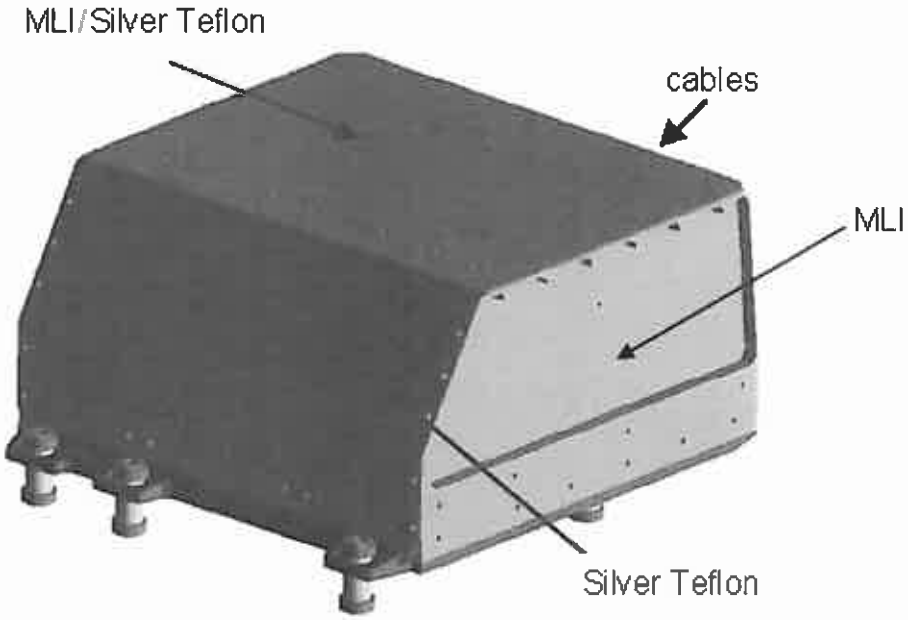

Fig. 8-5 - Thermo optical properties on ECAL and RICH HV bricks

8.6.2.2 RADIATOR

Req. Id. N.	Requirement	EQ	SS	SY	Remarks
AMSTH-8.6.2.2 -010	The thermo optical properties shall be white paint (see par. 16).		ROD, I		

Questo documento contiene informazioni di proprietà di CARLO GAVAZZI SPACE SpA. Tutti i diritti sono riservati.
All information contained in this document are property of CARLO GAVAZZI SPACE SpA. All right reserved.

8.6.2.2.1 MECHANICAL DESIGN

Req. Id. N.	Requirement	EQ	SS	SY	Remarks
AMSTH-8.6.2.2.1-010	Main Radiator shall be composed by a 25mm thick ROHACELL 51WF foam, with 2 aluminum face sheets on both sides 0.5mm thick.		ROD		
AMSTH-8.6.2.2.1-020	RAM radiator mass (excluding thermal HW): 30.2 Kg		T		
AMSTH-8.6.2.2.1-030	RAM radiator area: 4.24 m^2		T		
AMSTH-8.6.2.2.1-040	RAM radiator brackets mass: 14.9 kg		T		
AMSTH-8.6.2.2.1-050	WAKE radiator mass (excluding thermal HW): 34.0 Kg.		T		
AMSTH-8.6.2.2.1-060	WAKE radiator area: 3.99 m^2.		T		
AMSTH-8.6.2.2.1-070	WAKE radiator brackets mass: 14.9 kg.		T		

Note: See radiators mechanical ICD:
RAM radiator ICD: 41-AMS02TCS-000.00.01
WAKE radiator ICD: 42-AMS02TCS-000.00.01

8.6.2.2.2 RADIATOR INTERFACES

8.6.2.2.2.1 RADIATIVE

Req. Id. N.	Requirement	EQ	SS	SY	Remarks
AMSTH-8.6.2.2.2.1-010	Radiative heat exchanges to the vacuum case shall be minimized.		ROD	I	

8.6.2.2.2.2 CONDUCTIVE

Req. Id. N.	Requirement	EQ	SS	SY	Remarks
AMSTH-8.6.2.2.2.2-010	The Upper Bracket conductance, connecting upper T-crates to USS02 Upper Trunnion Bridges, is shown in Fig. 8-6		ROD		
AMSTH-8.6.2.2.2.2-020	Mid Bracket conductance is 0.324 W/K, connecting TSPDs and TPDs to USS02 Lower Trunnion Bridges.		ROD		
AMSTH-8.6.2.2.2.2-030	The Lower bracket conductance, connecting lower T-crates to USS02, is shown in Fig. 8-7.		ROD		

Questo documento contiene informazioni di proprietà di CARLO GAVAZZI SPACE SpA. Tutti i diritti sono riservati.
All information contained in this document are property of CARLO GAVAZZI SPACE SpA. All right reserved.

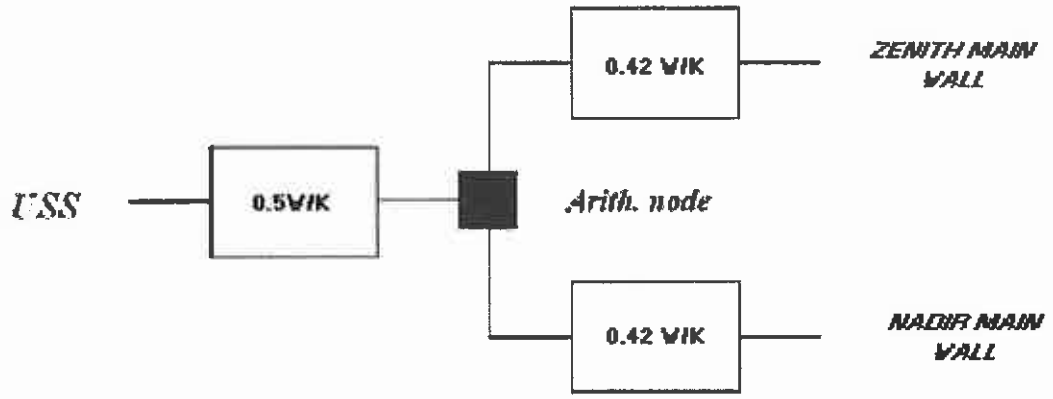

Fig. 8-6 - Upper Bracket TMM nodalization

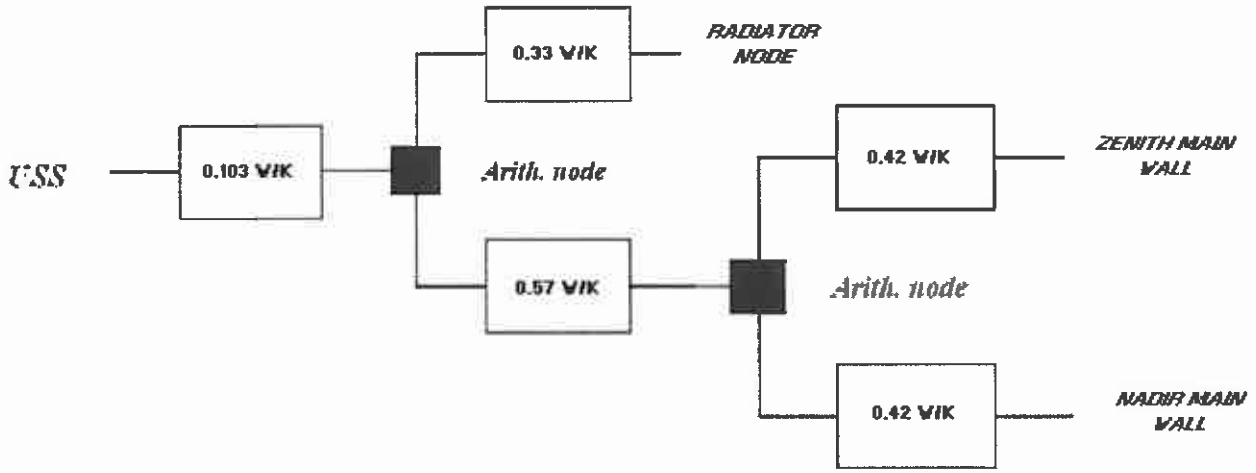

Fig. 8-7 - Lower bracket TMM nodalization

Questo documento contiene informazioni di proprietà di CARLO GAVAZZI SPACE SpA. Tutti i diritti sono riservati.
All information contained in this document are property of CARLO GAVAZZI SPACE SpA. All right reserved.

9. CAB

9.1 TEMPERATURE REFERENCE POINT

Req. Id. N.	Requirement	EQ	SS	SY	Remarks
AMSTH-9.1 -010	All the temperature requirements of the CAB shall refer to Temperature Reference Points (TRP). The location of the main TRP is: • in correspondence to Node 201 in ramp-up mode, and in correspondence to Node 219 in steady state mode.	ROD, S	ROD		

9.2 TEMPERATURE RANGES

Req. Id. N.	Requirement	EQ	SS	SY	Remarks
AMSTH-9.2 -010	Operative CAB rear side temperature (WAKE facing side) during the NOMINAL MONITORING mode under the worst cold and hot design cases shall be within the range:	A, T	A		

Node	Module	Min °C	Max °C
301	CCS CS 1	-25	45
302	CCS CS 2	-25	45
303	CCS CS 3	-25	44
304	CCS CS 4	-25	44
305	CCS CS 5	-25	44
306	CCS CS 6	-25	44
307	CCS CTRL TMTC	-25	45
308	28V ISO	-25	45
309	CCSC STM (Nom)	-25	46
310	PTM (Nom)	-25	46
311	PTM (Red)	-25	46
312	CCSC STM (Red)	-25	47
313	PS (Nom)	-25	47
314	PS (Red)	-25	46
315	CSP PWR DRV (Nom)	-25	46
316	CSP PWR DRV (Red)	-25	46
317	CSP TM/TC (Nom / Red	-25	46
318	CSP CL DET & CV	-25	46
319	CSP MAG DET & CV	-25	46

Questo documento contiene informazioni di proprietà di CARLO GAVAZZI SPACE SpA. Tutti i diritti sono riservati.
All information contained in this document are property of CARLO GAVAZZI SPACE SpA. All right reserved.

Req. Id. N.	Requirement	EQ	SS	SY	Remarks
AMSTH-9.2 -020	Operative CAB baseplate side temperature (Starboard facing side) during the NOMINAL MONITORING mode under the worst cold and hot design cases shall be within the range:	A, T	A		

Node	Module	Min °C	Max °C
201	CCS CS 1	-25	44
202	CCS CS 2	-25	44
203	CCS CS 3	-25	43
204	CCS CS 4	-25	41
205	CCS CS 5	-25	40
206	CCS CS 6	-25	40
207	CCS CTRL TMTC	-25	40
208	28V ISO	-25	40
209	CCSC STM (Nom)	-25	41
210	PTM (Nom)	-25	44
211	PTM (Red)	-25	47
212	CCSC STM (Red)	-25	48
213	PS (Nom)	-25	49
214	PS (Red)	-25	50
215	CSP PWR DRV (Nom)	-25	50
216	CSP PWR DRV (Red)	-25	50
217	CSP TM/TC (Nom / Red)	-25	50
218	CSP CL DET & CV	-25	51
219	CSP MAG DET & CV	-25	51

AMSTH-9.2 -030	The CAB shall demonstrate ability to properly function in the above TRPs operating ranges during NOMINAL MODE.	A, T	A		

Questo documento contiene informazioni di proprietà di CARLO GAVAZZI SPACE SpA. Tutti i diritti sono riservati.
All information contained in this document are property of CARLO GAVAZZI SPACE SpA. All right reserved.

Req. Id. N.	Requirement	EQ	SS	SY	Remarks
AMSTH-9.2 -040	CAB rear side (WAKE facing) temperature in RAMP-UP NOMINAL mode at the end of 15 minutes stabilization time under the worst cold and hot[2] design cases shall be within the range :	A, T	A		

Node	Module	Min °C	Max °C
301	CCS CS 1	-25	57
302	CCS CS 2	-25	56
303	CCS CS 3	-25	55
304	CCS CS 4	-25	54
305	CCS CS 5	-25	54
306	CCS CS 6	-25	53
307	CCS CTRL TM	-25	51
308	28V ISO	-25	50
309	CCSC STM (Nom)	-25	50
310	PTM (Nom)	-25	50
311	PTM (Red)	-25	50
312	CCSC STM (Red)	-25	50
313	PS (Nom)	-25	50
314	PS (Red)	-25	50
315	CSP PWR DRV (Nom)	-25	51
316	CSP PWR DRV (Red)	-25	51
317	CSP TM/TC (Nom / Red)	-25	50
318	CSP CL DET & CV	-25	51
319	CSP MAG DET & CV	-25	51

[2] CAB cannot perform ramp-up in extreme beta angles under hot environment conditions (Beta = -75°). Therefore ramp up hot design case is Beta = -50° and the ISS attitude is Y,P,R = 0,0,0. This attitude is almost equivalent to the Torque Equilibrium Attitude (TEA), and can be considered the most probable during flight.

Questo documento contiene informazioni di proprietà di CARLO GAVAZZI SPACE SpA. Tutti i diritti sono riservati.
All information contained in this document are property of CARLO GAVAZZI SPACE SpA. All right reserved.

Req. Id. N.	Requirement	EQ	SS	SY	Remarks
AMSTH-9.2 -050	CAB baseplate (Starboard facing) temperature in RAMP-UP NOMINAL mode at the end of 15 minutes stabilization time under the worst cold and hot design cases shall be within the range :	A, T	A		

Node	Module	Min °C	Max °C
201	CCS CS 1	-25	61
202	CCS CS 2	-25	61
203	CCS CS 3	-25	58
204	CCS CS 4	-25	49
205	CCS CS 5	-25	46
206	CCS CS 6	-25	45
207	CCS CTRL TMTC	-25	41
208	28V ISO	-25	39
209	CCSC STM (Nom)	-25	40
210	PTM (Nom)	-25	44
211	PTM (Red)	-25	47
212	CCSC STM (Red)	-25	49
213	PS (Nom)	-25	50
214	PS (Red)	-25	50
215	CSP PWR DRV (Nom)	-25	51
216	CSP PWR DRV (Red)	-25	51
217	CSP TM/TC (Nom / Red)	-25	51
218	CSP CL DET & CV	-25	52
219	CSP MAG DET & CV	-25	52

.

AMSTH-9.2 -060	The CAB shall demonstrate ability to properly function in the above TRPs operating ranges during RAMP-UP NOMINAL MODE[3] (15 minutes) .	A, T	A		

[3] The RAMP-UP NOMINAL mode temperatures requirements presented in the tables are the results of the hottest analysis transported to the skin. This way positive margin exist: 12°C for the power transformer and nearly 11°C for the snubber resistors. In addition to that CRISA has provided, only for power transformers, a rule table to avoid during CAB ground and estimated orbital operations exhausting the life of the components.

Cycles Allowed (Ni)	Number of Cycles (ni)	Component Temperature Range (°C)	**6 converters operating Base nodes 201-206 Temperature Range (°C)**	5 converters operating Base nodes 201-206 Temperature Range (°C)
100	r	100 to 90	**60 to 50**	50 to 40
200	s	90 to 80	**50 to 40**	40 to 30
400	t	80 to 70	**40 to 30**	30 to 20
800	u	70 to 60	**30 to 20**	20 to 10
1600	v	lower than 60	**lower than 20**	lower than 10

Condition to respect $1 > \Sigma (n_i / N_i)$
s

Questo documento contiene informazioni di proprietà di CARLO GAVAZZI SPACE SpA. Tutti i diritti sono riservati.
All information contained in this document are property of CARLO GAVAZZI SPACE SpA. All right reserved.

Req. Id. N.	Requirement	EQ	SS	SY	Remarks
AMSTH-9.2 -100	Non operative CAB rear side temperature (WAKE facing side) under the worst cold and hot design cases shall be within the range :	A, T	A		

Node	Module	Min °C	Max °C
301	CCS CS 1	-30	70
302	CCS CS 2	-30	70
303	CCS CS 3	-30	70
304	CCS CS 4	-30	70
305	CCS CS 5	-30	70
306	CCS CS 6	-30	70
307	CCS CTRL TMTC	-30	70
308	28V ISO	-30	70
309	CCSC STM (Nom)	-30	70
310	PTM (Nom)	-30	70
311	PTM (Red)	-30	70
312	CCSC STM (Red)	-30	70
313	PS (Nom)	-30	70
314	PS (Red)	-30	70
315	CSP PWR DRV (Nom)	-30	70
316	CSP PWR DRV (Red)	-30	70
317	CSP TM/TC (Nom / Red)	-30	70
318	CSP CL DET & CV	-30	70
319	CSP MAG DET & CV	-30	70

Questo documento contiene informazioni di proprietà di CARLO GAVAZZI SPACE SpA. Tutti i diritti sono riservati.
All information contained in this document are property of CARLO GAVAZZI SPACE SpA. All right reserved.

Req. Id. N.	Requirement	EQ	SS	SY	Remarks
AMSTH-9.2 -110	Non operative CAB baseplate temperature (Starboard facing side) under the worst cold and hot design cases shall be within the range:	A, T	A		

Node	Module	Min °C	Max °C
201	CCS CS 1	-30	70
202	CCS CS 2	-30	70
203	CCS CS 3	-30	70
204	CCS CS 4	-30	70
205	CCS CS 5	-30	70
206	CCS CS 6	-30	70
207	CCS CTRL TMTC	-30	70
208	28V ISO	-30	70
209	CCSC STM (Nom)	-30	70
210	PTM (Nom)	-30	70
211	PTM (Red)	-30	70
212	CCSC STM (Red)	-30	70
213	PS (Nom)	-30	70
214	PS (Red)	-30	70
215	CSP PWR DRV (Nom)	-30	70
216	CSP PWR DRV (Red)	-30	70
217	CSP TM/TC (Nom / Red)	-30	70
218	CSP CL DET & CV	-30	70
219	CSP MAG DET & CV	-30	70

AMSTH-9.2 -130	The minimum switch-on temperature for CAB shall be -25°C	T	A		

Questo documento contiene informazioni di proprietà di CARLO GAVAZZI SPACE SpA. Tutti i diritti sono riservati.
All information contained in this document are property of CARLO GAVAZZI SPACE SpA. All right reserved.

9.3 HEATERS

Req. Id. N.	Requirement	EQ	SS	SY	Remarks
AMSTH-9.3 -010	CAB heaters shall consume maximum 100W at 113V.		ROD		
AMSTH-9.3 -020	CAB heaters shall be sized in order to bring the CAB TRPs to -25°C under the worst cold conditions.	A,T	A,T		

9.4 HEAT DISSIPATION

Req. Id. N.	Requirement	EQ	SS	SY	Remarks
AMSTH-9.3 -010	<table><tr><td></td><td>CSP ON</td><td>CSP OFF</td></tr><tr><td colspan="3">COLD REDUNDANCY</td></tr><tr><td>Minimum</td><td>42.1 W</td><td>21.1 W</td></tr><tr><td>Typical</td><td>69.8 W</td><td>35 W</td></tr><tr><td>Maximum</td><td>80.8 W</td><td>-</td></tr><tr><td colspan="3">HOT REDUNDANCY</td></tr><tr><td>Typical</td><td>88.8 W</td><td>-</td></tr><tr><td>Maximum</td><td>102.3 W</td><td>-</td></tr></table> During Ramp-up dissipation is given by Fig. 9-1 if 6 modules are working[4] For information, not for sizing purposes: Ramp-up dissipation is given by Fig. 9-2 - if 5 modules are working During Ramp-down dissipation is given by Fig. 9-3	T		T	

[4] Source: email from CRISA, 11/Feb/2008

Questo documento contiene informazioni di proprietà di CARLO GAVAZZI SPACE SpA. Tutti i diritti sono riservati.
All information contained in this document are property of CARLO GAVAZZI SPACE SpA. All right reserved.

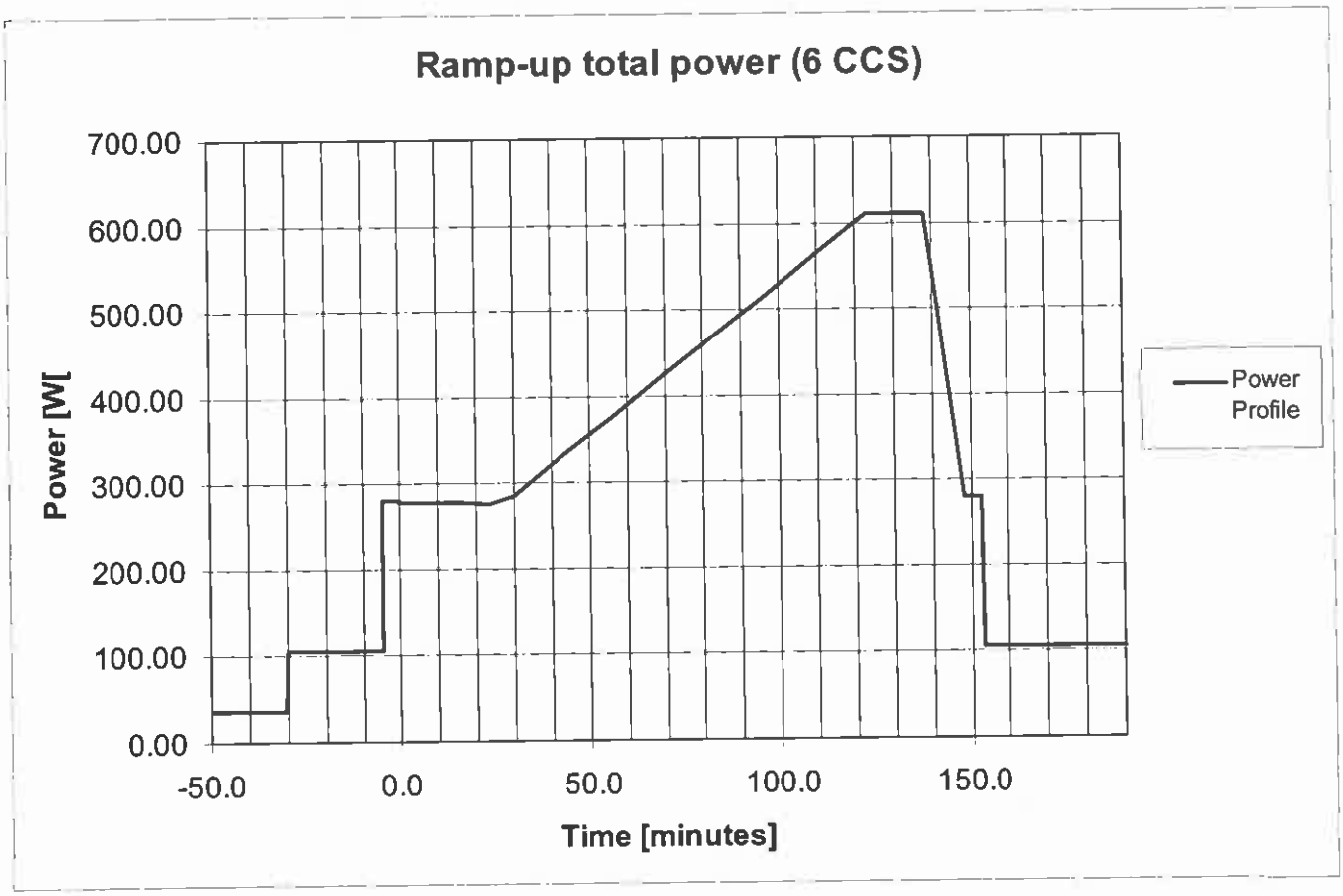

Fig. 9-1- Power in shunt, Magnet wires and 6 CCS-CS module for Ramp-up condition.

Questo documento contiene informazioni di proprietà di CARLO GAVAZZI SPACE SpA. Tutti i diritti sono riservati.
All information contained in this document are property of CARLO GAVAZZI SPACE SpA. All right reserved.

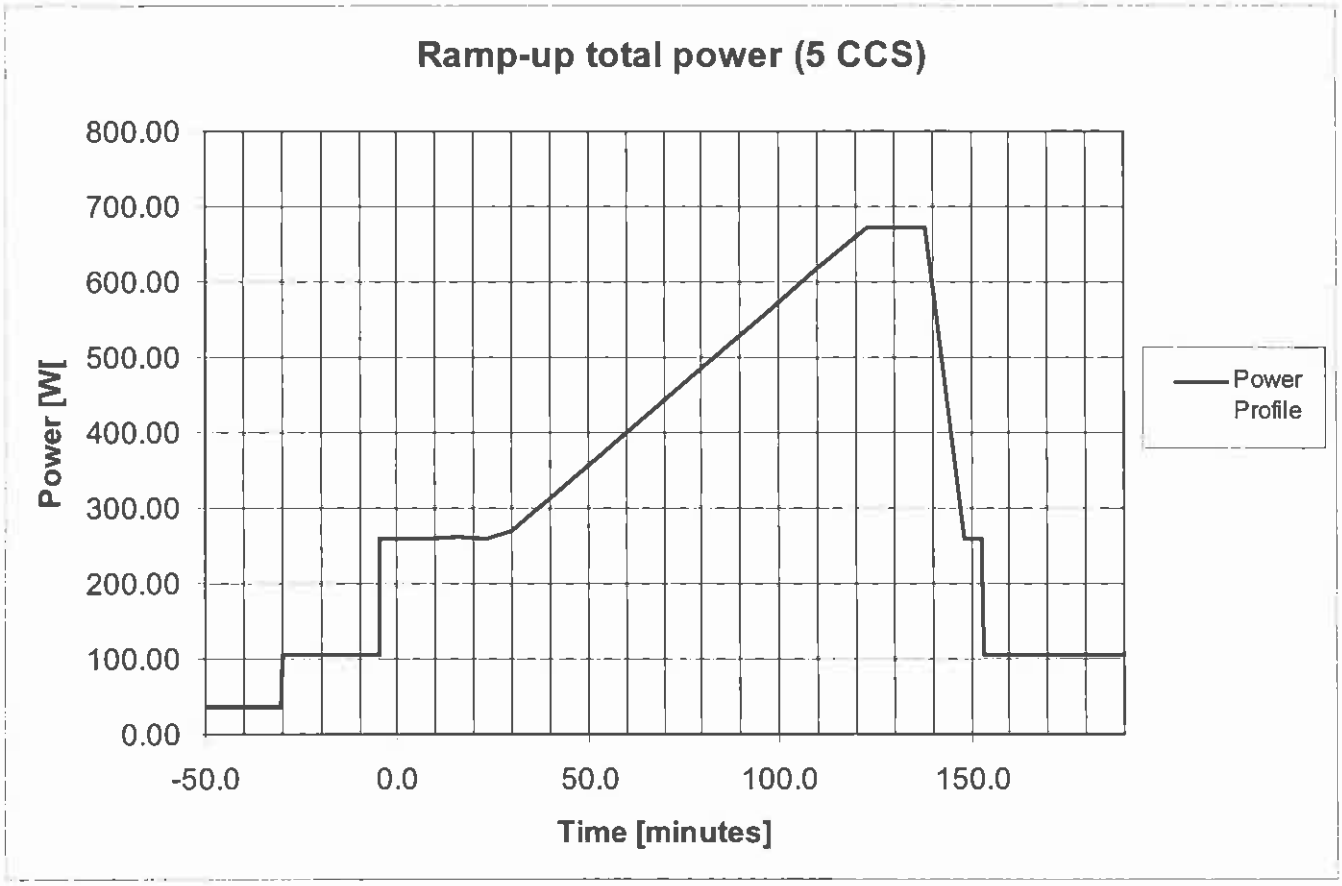

Fig. 9-2 - Power in shunt, Magnet wires and 5 CCS-CS module for Ramp-up condition – FOR INFORMATION ONLY; not for sizing purposes

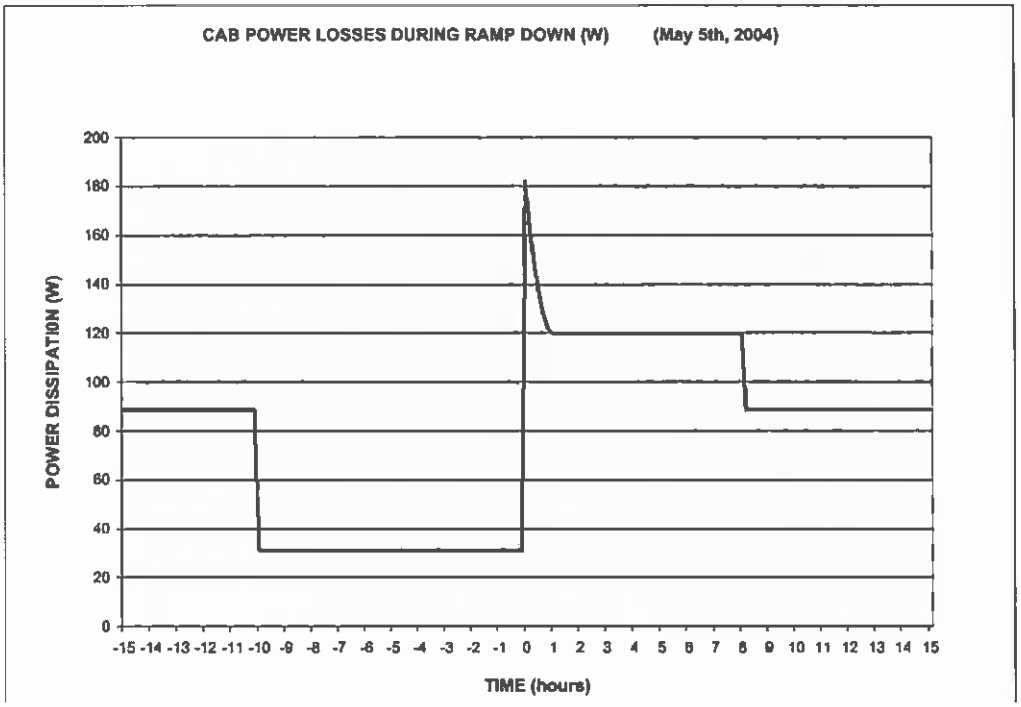

Fig. 9-3 - Power in entire CAB for Ramp-down condition

Questo documento contiene informazioni di proprietà di CARLO GAVAZZI SPACE SpA. Tutti i diritti sono riservati.
All information contained in this document are property of CARLO GAVAZZI SPACE SpA. All right reserved.

9.5 MECHANICAL DESIGN

Req. Id. N.	Requirement	EQ	SS	SY	Remarks
AMSTH-9.5 -010	CAB is supported by USS02 through 26 NAS1351 screws and two reinforcement beams.			ROD	
AMSTH-9.5 -030	TCS weight shall be less than 4.2Kg		ROD		

9.6 SUB DETECTOR THERMAL I/F DESCRIPTION

9.6.1 CONDUCTIVE

Req. Id. N.	Requirement	EQ	SS	SY	Remarks
AMSTH-9.6.1 -010	Contact area between CAB base plate and USS upper trunnion is filled with appropriate thermal filler (e.g. Sigraflex).		ROD	I	
AMSTH-9.6.1 -020	I/F conductance (CAB baseplate to USS Upper Trunnion) value shall be larger than 32W/K[5]		ROD		
AMSTH-9.6.1 -030	Conductance between CAB and USS lower Trunnion is zero (no physical connection).			ROD	
AMSTH-9.6.1 -040	CAB is sunk to two LHPs that in turn are sunk to wake radiator.		ROD, I		
AMSTH-9.6.1 -045	I/F conductance (CAB baseplate to each LHP saddle) value shall be larger than 13 W/K [6]				
AMSTH-9.6.1 -050	I/F of LHP condenser and radiator is given in Fig. 9-5 and is realized gluing the LHP and then riveting it.		ROD, I		
AMSTH-9.6.1 -060	I/F of LHP evaporator and CAB is given in Fig. 9-6 with appropriate thermal filler (e.g. cho-therm).		ROD, I		
AMSTH-9.6.1 -070	Conductive link between the CAB and the Vacuum Case via the current leads is 0.38W/K.	ROD			
AMSTH-9.6.1 -080	Two axial grooved heat pipes are mounted along the CAB height, on the wake side and on the top cover, to homogenize the temperature across the modules.		ROD, I		
AMSTH-9.6.1 -090	Three axial grooved heat pipes are interconnecting the USS upper Trunnion bridge and the VC I/F Joint			ROD, I	

[5] The assumed specific contact conductance is 500 W/m^2K
[6] The assumed specific contact conductance is 1000 W/m^2K

Questo documento contiene informazioni di proprietà di CARLO GAVAZZI SPACE SpA. Tutti i diritti sono riservati.
All information contained in this document are property of CARLO GAVAZZI SPACE SpA. All right reserved.

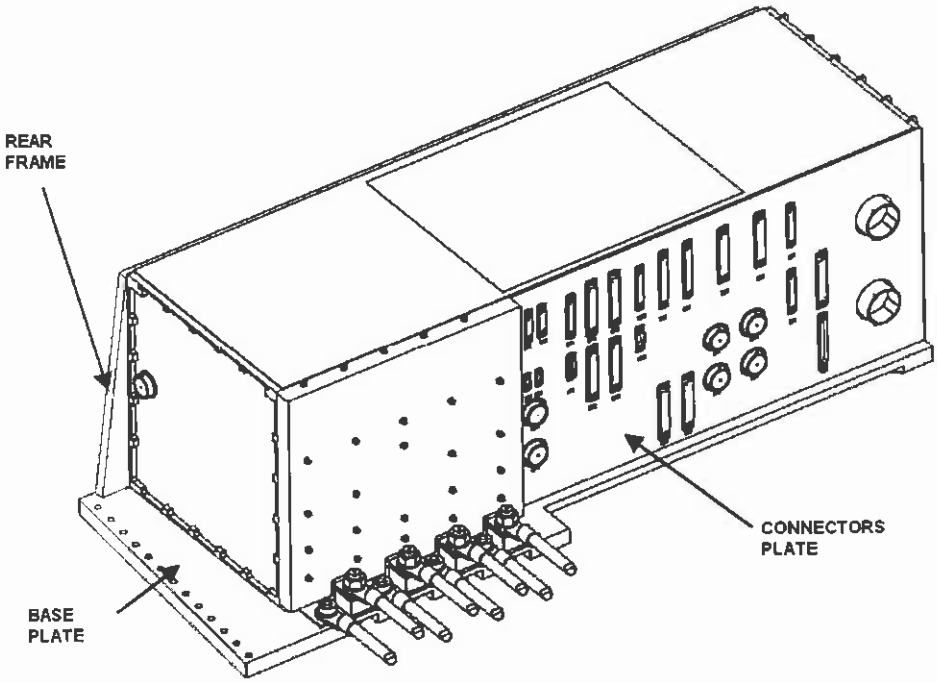

Fig. 9-4 - CAB assembly

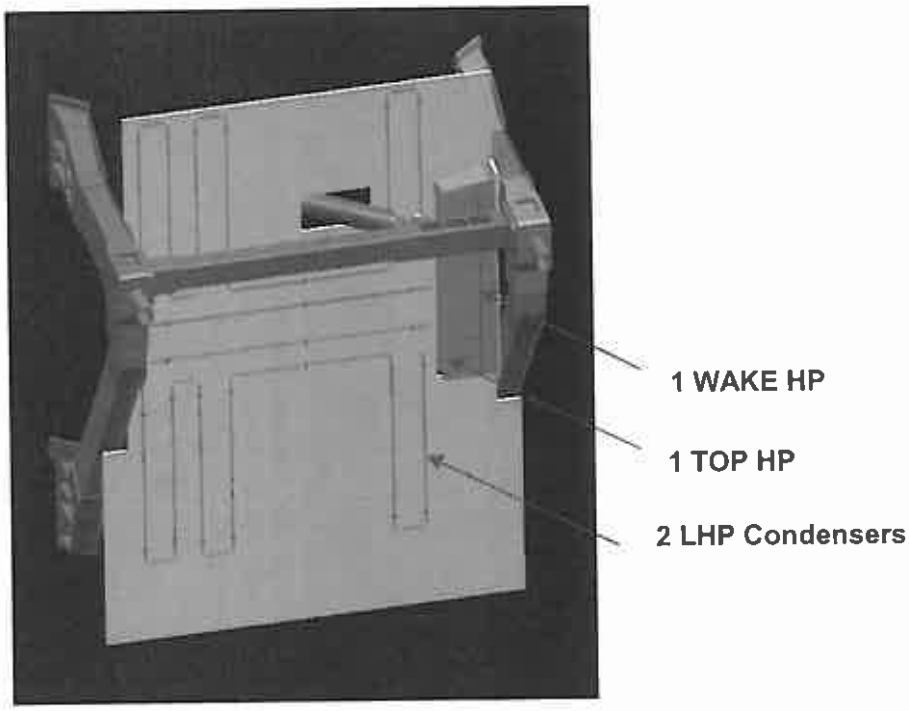

Fig. 9-5 - /F between LHP condenser and radiator

Questo documento contiene informazioni di proprietà di CARLO GAVAZZI SPACE SpA. Tutti i diritti sono riservati.
All information contained in this document are property of CARLO GAVAZZI SPACE SpA. All right reserved.

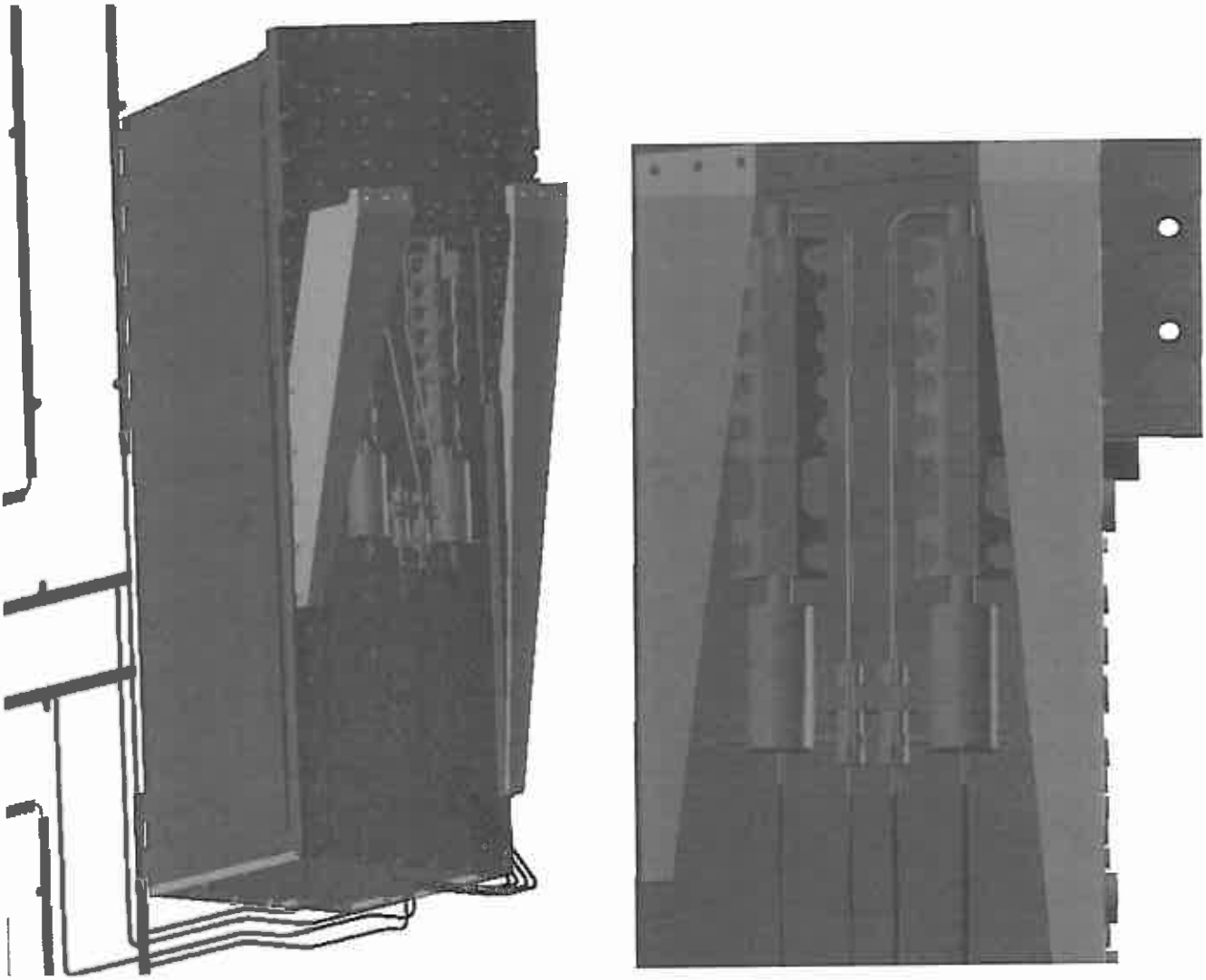

Fig. 9-6 - /F between LHP evaporator and CAB

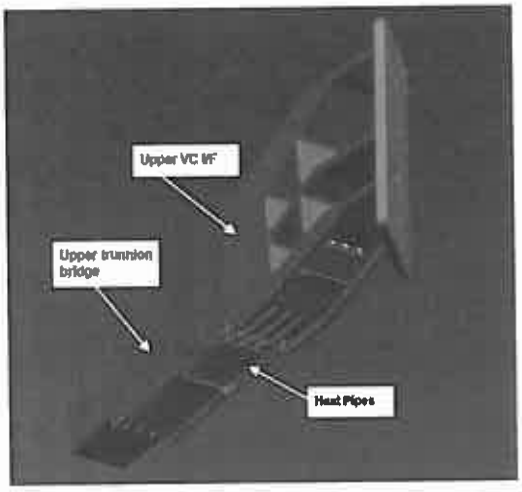

Fig. 9-7 - HP Mounted between the USS Upper trunnion bridge and the USS Upper I/F Joint

Questo documento contiene informazioni di proprietà di CARLO GAVAZZI SPACE SpA. Tutti i diritti sono riservati.
All information contained in this document are property of CARLO GAVAZZI SPACE SpA. All right reserved.

Questo documento contiene informazioni di proprietà di CARLO GAVAZZI SPACE SpA. Tutti i diritti sono riservati.
All information contained in this document are property of CARLO GAVAZZI SPACE SpA. All right reserved.

9.6.2 RADIATIVE

Req. Id. N.	Requirement	EQ	SS	SY	Remarks
AMSTH-9.6.2 -010	Radiative area on the CAB itself is roughly 0.75 m^2.	ROD, T			
AMSTH-9.6.2 -020	CAB walls thermo-optical properties is silver Teflon 5mils (see par. 16).	I			
AMSTH-9.6.2 -030	CAB LHP tubes are insulated by MLI		ROD		Check no other MLI is needed on CAB surface
AMSTH-9.6.2 -040	CAB MLI shall weigh less than 1.4 Kg	T			

Questo documento contiene informazioni di proprietà di CARLO GAVAZZI SPACE SpA. Tutti i diritti sono riservati.
All information contained in this document are property of CARLO GAVAZZI SPACE SpA. All right reserved.

10. MAGNET / VACUUM CASE

10.1 TEMPERATURE REFERENCE POINT

Req. Id. N.	Requirement	EQ	SS	SY	Remarks
AMSTH-10.1 -010	All the temperature requirements of the VC shall refer to Temperature Reference Points (TRP). Reference temperature for VC is temperature weighted average over area.	ROD; S	ROD		

10.2 TEMPERATURE RANGES

Req. Id. N.	Requirement	EQ	SS	SY	Remarks
AMSTH-10.2 -010	The vacuum case external temperature shall be as low as possible and the design goal is to have it (in average) colder than 10°C.		A	A	

10.3 HEAT DISSIPATION

Req. Id. N.	Requirement	EQ	SS	SY	Remarks
AMSTH-10.3 -010	See cryocoolers. No direct power dissipation is taking place in the vacuum case, it is assumed adiabatic.		ROD		

Questo documento contiene informazioni di proprietà di CARLO GAVAZZI SPACE SpA. Tutti i diritti sono riservati.
All information contained in this document are property of CARLO GAVAZZI SPACE SpA. All right reserved.

10.4 SUB DETECTOR THERMAL I/F DESCRIPTION

10.4.1 CONDUCTIVE

Req. Id. N.	Requirement	EQ	SS	SY	Remarks
AMSTH-10.4.1 -010	The vacuum case has a mechanical interface to the USS at 8 points (4 on the upper support flange, 4 on the lower support flange), each of them having a value of 57 W/K.		ROD		

10.4.2 RADIATIVE

10.4.2.1 MLI

Req. Id. N.	Requirement	EQ	SS	SY	Remarks
AMSTH-10.4.2.1 - 010	The Outer Vacuum Case (VC) shell on ± Y quadrants (towards crates) will be covered with MLI. Its external t/o properties are Beta Cloth (see par. 16)		ROD, I		
AMSTH-10.4.2.1 - 020	MLI is foreseen between upper support ring and TRD (also called the 'skirt MLI'). Its external t/o properties are Beta Cloth (see par. 16)		ROD, I		
AMSTH-10.4.2.1 - 030	MLI is foreseen on the upper and lower support rings. Its external t/o properties are Beta Cloth (see par. 16)		ROD, I		
AMSTH-10.4.2.2 - 040	VACUUM CASE CONICAL FLANGES MLI: MLI blanket is foreseen ONLY on the outermost band of the lower conical flange of the vacuum case. Its external t/o properties are Beta Cloth (see par. 16)		ROD, I		
AMSTH-10.4.2.2 - 050	Vacuum case MLI shall weigh less than 5.7 Kg (broken down into: 1.5 Kg per each ring and 2.7 Kg for the RAM/WAKE surfaces)	T			
AMSTH-10.4.2.2 – 060	"Skirt MLI" defined above shall weigh less than 1.9 Kg	T			
AMSTH-10.4.2.2 – 070	The vacuum case lower conical flange MLI shall weigh less than 2.4 Kg	T			

Questo documento contiene informazioni di proprietà di CARLO GAVAZZI SPACE SpA. Tutti i diritti sono riservati.
All information contained in this document are property of CARLO GAVAZZI SPACE SpA. All right reserved.

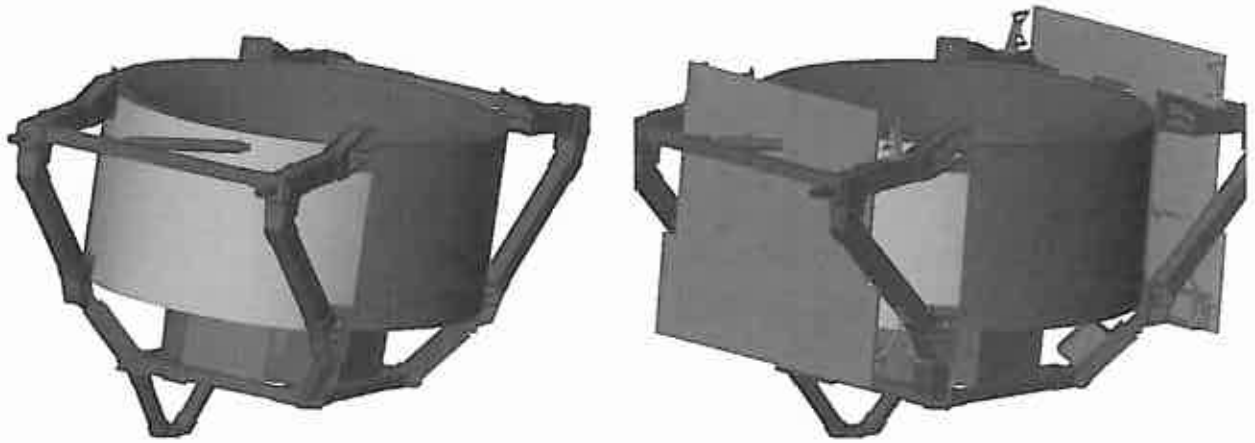

Fig. 10-1 - MLI on Vacuum Case facing the main radiators

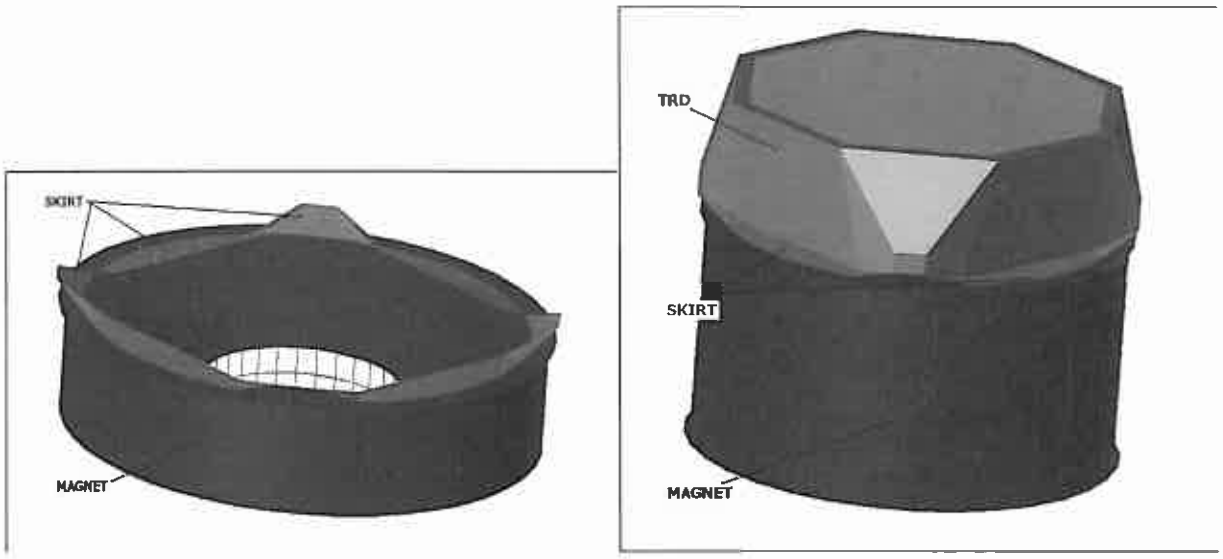

Fig. 10-2 - MLI between vacuum case upper support ring and TRD

10.4.2.2 OTHER SURFACES

Req. Id. N.	Requirement	EQ	SS	SY	Remarks
AMSTH-10.4.2.2 - 010	The Outer Vacuum Case shell on ± X quadrants will be covered with Silver Teflon including the Ribs as far as pratical.		ROD, I		
AMSTH-10.4.2.2 - 020	All other surfaces will be clear anodized aluminum (see par. 16).		ROD, I		
AMSTH-10.4.2.2 - 030	Silvered Teflon weight is defined all-together in the USS silvered Teflon.				See AMSTH-16.6.2 -020

Questo documento contiene informazioni di proprietà di CARLO GAVAZZI SPACE SpA. Tutti i diritti sono riservati.
All information contained in this document are property of CARLO GAVAZZI SPACE SpA. All right reserved.

10.5 PILOT VALVE VACUUM VESSEL (PVVV)

Req. Id. N.	Requirement	EQ	SS	SY	Remarks
AMSTH-10.5 -010	Temperature Operational range -10°C ÷ +60°C	S, T	A		
AMSTH-10.5 -020	Temperature Non operational range -40°C ÷ +80°C	S, T	A		
AMSTH-10.5 -030	Heat Dissipation: 0.022 W minimum heat load, 1.2 W maximum heat load.		T		An estimate of the duty cycle will be operation of the valves for maximum of 1 day every year.
AMSTH-10.5 -040	Mechanical Design Fixation point: located on the lower support ring of the vacuum case		ROD		
AMSTH-10.5 -050	Thermal I/F to the fixation point (W/K): Aluminum brackets 271 kW/m		ROD		

10.6 CDD

Req. Id. N.	Requirement	EQ	SS	SY	Remarks
AMSTH-10.6 -010	Temperature Operational range -65°C ÷ +200°C	S, T(TBC)			A tighter requirement is given by system level constraints: USS-02 max temperature!!
AMSTH-10.6 -020	Temperature Non operational range -65°C ÷ +200°C	S, T(TBC)			Ditto
AMSTH-10.6 -030	Heat Dissipation See Fig. 10-3	T	T		
AMSTH-10.6 -040	Fixation point: USS02, sill trunnion joints (wake)			ROD	
AMSTH-10.6 -050	Thermal I/F Conduction to USS02			ROD	Type of thermal filler TBD

Questo documento contiene informazioni di proprietà di CARLO GAVAZZI SPACE SpA. Tutti i diritti sono riservati.
All information contained in this document are property of CARLO GAVAZZI SPACE SpA. All right reserved.

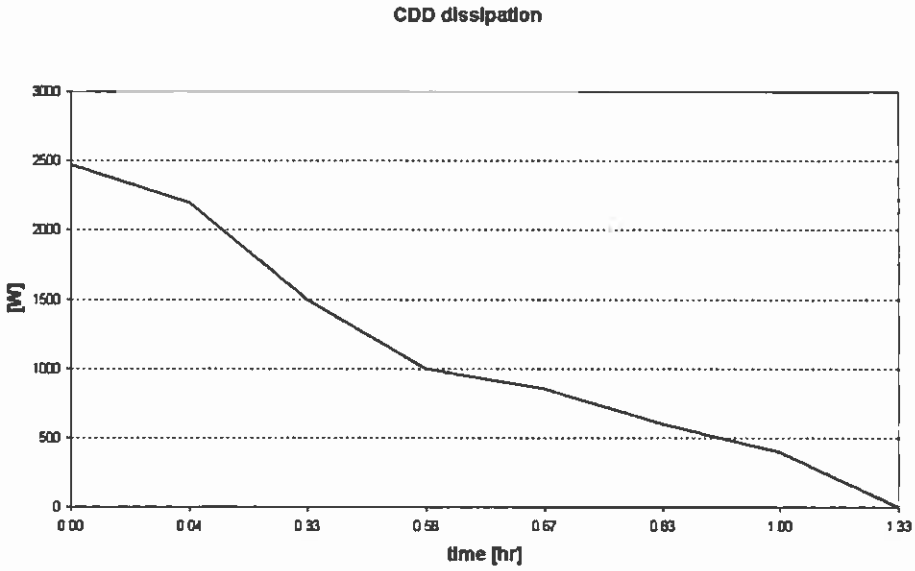

Fig. 10-3 – Heat dissipated by dump diodes during magnet discharge

10.7 UPS

Req. Id. N.	Requirement	EQ	SS	SY	Remarks
AMSTH-10.7 -010	Temperature Operational range (magnet charged) -25°C to +50°C	S, T	A		
AMSTH-10.7 -020	Temperature Non operational range (magnet uncharged) -40°C to +50°C	S, T	A		
AMSTH-10.7 -030	Heat Dissipation 2-5 W average, 10W max	T		T	
AMSTH-10.7 -040	Fixation point: USS02: Vacuum case joint, wake -X			ROD	
AMSTH-10.7 -050	Thermal I/F Conduction to USS02			ROD	Type of thermal filler TBD
AMSTH-10.7 -060	UPS MLI shall weigh less than 0.4 Kg	T			

Questo documento contiene informazioni di proprietà di CARLO GAVAZZI SPACE SpA. Tutti i diritti sono riservati.
All information contained in this document are property of CARLO GAVAZZI SPACE SpA. All right reserved.

11.CRYOCOOLERS

11.1 TEMPERATURE REFERENCE POINT

Req. Id. N.	Requirement	EQ	SS	SY	Remarks
AMSTH-11.1 -010	All the temperature requirements of the cryocoolers shall refer to Temperature Reference Points (TRP). The location of the TRPs is on the heat rejection collar.	ROD; S	ROD		

11.2 TEMPERATURE RANGES

Req. Id. N.	Requirement	EQ	SS	SY	Remarks
AMSTH-11.2 -010	The minimum storage temperature shall be: -40°C.	S, T	A		
AMSTH-11.2 -020	The minimum turn on mode shall be: -20 °C.	S, T	A		
AMSTH-11.2 -030	The steady-state operating mode temperature range shall be: from -20 °C to +40 °C	S, T	A		

11.3 HEAT DISSIPATION

Req. Id. N.	Requirement	EQ	SS	SY	Remarks
AMSTH-11.3 -010	Heat dissipation of each cryocooler is: Minimum: 60 Watts + heat lift Maximum: 150 Watts + heat lift Nominal for design: 100 Watts + lift heat lift determined by calculation heat lift is a function of power, reject temperature and cold tip temperature	T, S		T	Heat lift chart to be included

Questo documento contiene informazioni di proprietà di CARLO GAVAZZI SPACE SpA. Tutti i diritti sono riservati.
All information contained in this document are property of CARLO GAVAZZI SPACE SpA. All right reserved.

11.4 SUB DETECTOR THERMAL I/F DESCRIPTION

11.4.1 CONDUCTIVE

Req. Id. N.	Requirement	EQ	SS	SY	Remarks
AMSTH-11.4.1 -010	Each cryocoolers operational nominal power (see par. 11.3) is sunk to direct condensing radiators by means of LHP.		ROD		
AMSTH-11.4.1 -020	The thermal conductance between the collar and each LHP evaporator should be maximized. It must be larger than 5W/K for each of the two LHPs (measured on QM with indium foil I/F filler is 5.5W/K).		ROD, T		
AMSTH-11.4.1 -030	The LHP evaporators (2 for each cryo) will bring the heat power to its own radiator.		ROD		
AMSTH-11.4.1 -031	Each LHP is equipped with a bypass valve with set point -20°C	T	ROD		
AMSTH-11.4.1 -040	Two LHP are foreseen for each cryocooler		ROD		
AMSTH-11.4.1 -050	A thermal de-coupling between the Cryocoolers and the vacuum case shall be obtained by means of brackets, with a total mounting conductance lower than 0.01W/K	ROD, T			
AMSTH-11.4.1 -060	Conductance between cold tip and cryocooler body is shown in Fig. 11-2.	T			
AMSTH-11.4.1 -070	The 2 lower Cryocoolers LHP are mechanically supported by dedicated CFRP beams. One of these two beams is shared with TTCS tubing		ROD		
AMSTH-11.4.1 -070	The two CFRP beams shall weigh 5 kg in total	T			

Questo documento contiene informazioni di proprietà di CARLO GAVAZZI SPACE SpA. Tutti i diritti sono riservati.
All information contained in this document are property of CARLO GAVAZZI SPACE SpA. All right reserved.

Fig. 11-1 - Typical Lay out of cryocooler LHP System

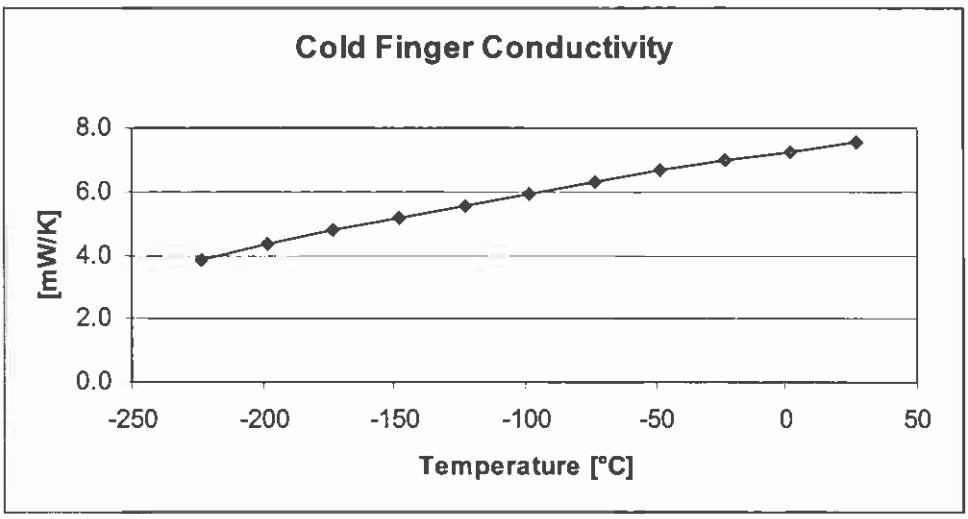

Fig. 11-2- Conductance between cold tip and cryocooler body

Questo documento contiene informazioni di proprietà di CARLO GAVAZZI SPACE SpA. Tutti i diritti sono riservati.
All information contained in this document are property of CARLO GAVAZZI SPACE SpA. All right reserved.

11.4.2 RADIATIVE

11.4.2.1 MLI

Req. Id. N.	Requirement	EQ	SS	SY	Remarks
AMSTH-11.4.2.1 - 010	Each Cryocooler will be thermally insulated from the environment, by means of a suitable MLI blanket.		ROD	I	
AMSTH-11.4.2.1 - 020	Cryocooler MLI and LHP MLI shall weigh in total less than 0.6 Kg	T			

Questo documento contiene informazioni di proprietà di CARLO GAVAZZI SPACE SpA. Tutti i diritti sono riservati.
All information contained in this document are property of CARLO GAVAZZI SPACE SpA. All right reserved.

12.CRYOCOOLERS ZENITH RADIATOR

12.1 TEMPERATURE REFERENCE POINT

Req. Id. N.	Requirement	EQ	SS	SY	Remarks
AMSTH-12.1 -010	All the temperature requirements of the ZENITH RADIATOR shall refer to Temperature Reference Points (TRP). The TRP for Zenith radiator is located at fluid inlet and outlet interface.	ROD; S	ROD		

12.2 TEMPERATURE RANGES

Req. Id. N.	Requirement	EQ	SS	SY	Remarks
AMSTH-12.2 -010	working fluid freezing temperature -189°C (propylene)	ROD			
AMSTH-12.2 -020	Max working fluid temperature +40°C (TBC by TCS Team)		A		

12.3 MECHANICAL DESIGN

Req. Id. N.	Requirement	EQ	SS	SY	Remarks
AMSTH-12.3 -010	The (four) cryocoolers radiators are located on top of TRD and their surface has an octagonal shape, divided into four pieces.		ROD		
AMSTH-12.3 -020	Zenith total cryocoolers Radiator: Total area: 4.85 m^2.		ROD, T		
AMSTH-12.3 -030	Zenith total cryocoolers Radiator: Total Mass: 43.5 Kg, including brackets and LHP piping.		T		
AMSTH-12.3 -040	Cross section of the fluid pipes is 4mm OD, 3mm ID.		ROD		
AMSTH-12.3 -050	The X0 (radiator length in %) profile of the section of the radiator is presented in Fig. 12-1 with the following thickness values: • 1.6 mm top Aluminum skin • 10 mm Rohacell 51WF • 0.3 mm low Aluminum skin		ROD, A		

Questo documento contiene informazioni di proprietà di CARLO GAVAZZI SPACE SpA. Tutti i diritti sono riservati.
All information contained in this document are property of CARLO GAVAZZI SPACE SpA. All right reserved.

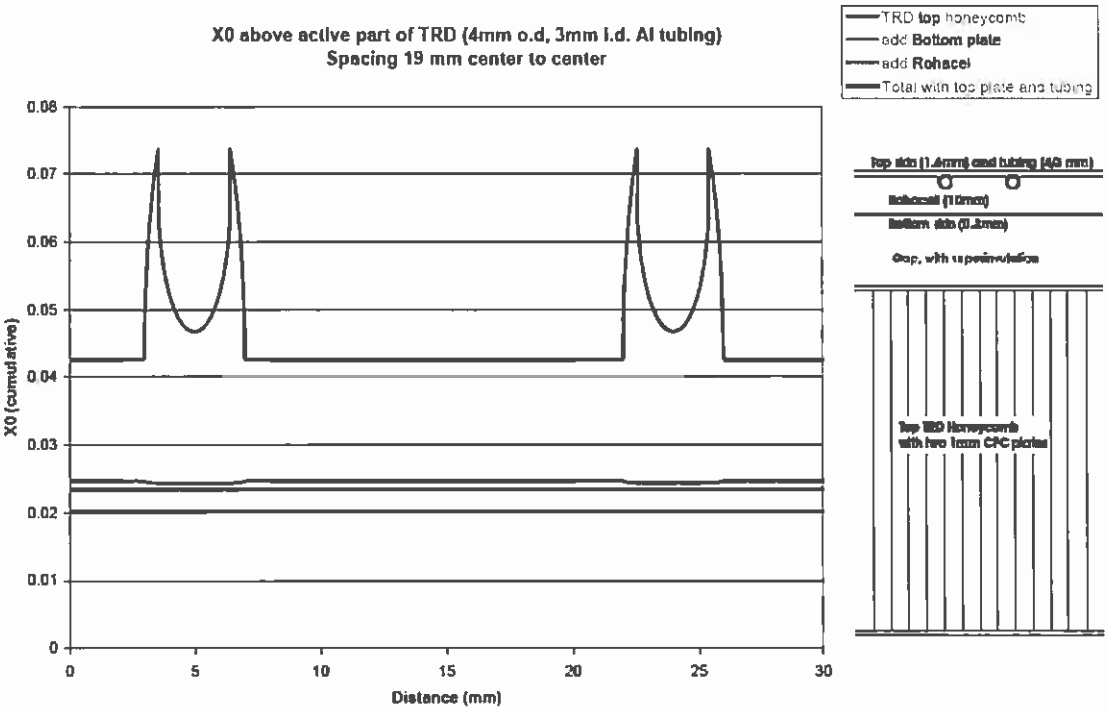

Fig. 12-1 - X_0 for heat pipes inside the Zenith radiator

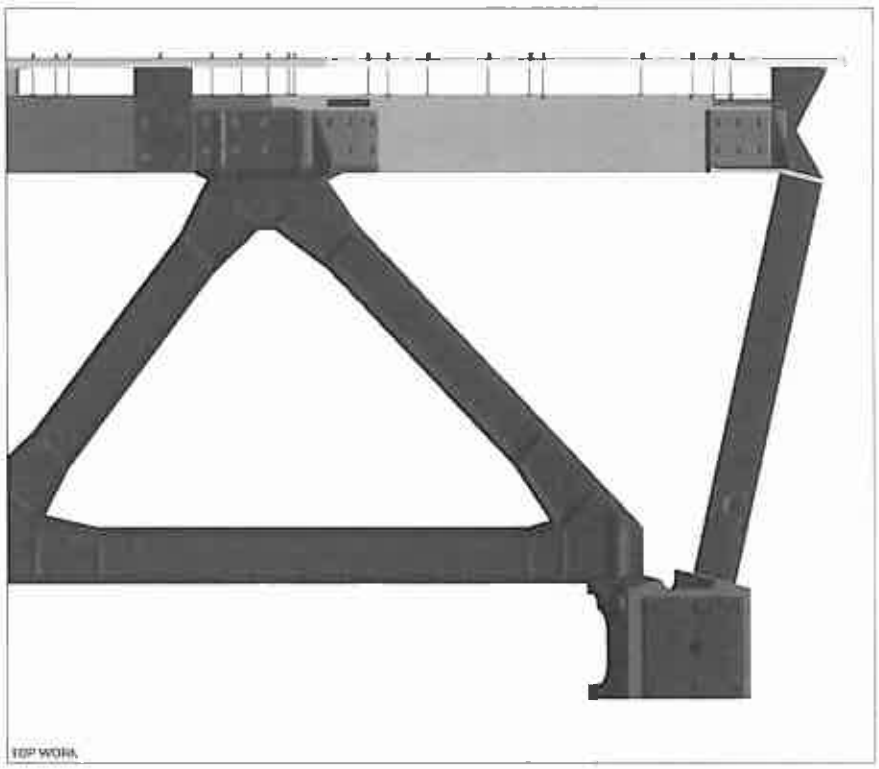

Fig. 12-2 – Cryocooler radiator side view

Questo documento contiene informazioni di proprietà di CARLO GAVAZZI SPACE SpA. Tutti i diritti sono riservati.
All information contained in this document are property of CARLO GAVAZZI SPACE SpA. All right reserved.

12.4 SUB DETECTOR THERMAL I/F DESCRIPTION

12.4.1 CONDUCTIVE

Req. Id. N.	Requirement	EQ	SS	SY	Remarks
AMSTH-12.4.1 -010	The radiator are fixed to TRD upper honeycomb panel by means of brackets and spokes.			ROD	
AMSTH-12.4.1 -020	Conductances for each Z-bracket shall be lower than: 0.01 W/K		ROD		
AMSTH-12.4.1 -030	Conductances for each spoke shall be lower than: 0.001 W/K		ROD		
AMSTH-12.4.1 -040	Conductances for each bracket shall be lower than: 0.1 W/K		ROD		

12.4.2 RADIATIVE

Req. Id. N.	Requirement	EQ	SS	SY	Remarks
AMSTH-12.4.2 -010	The radiator shall be designed in such a way to minimize the heat radiation on the backside.		ROD		
AMSTH-12.4.2 -030	Outer (+ Z pointing) surfaces thermo optical properties shall be silvered teflon 5 mils (see par. 16).		ROD, I		

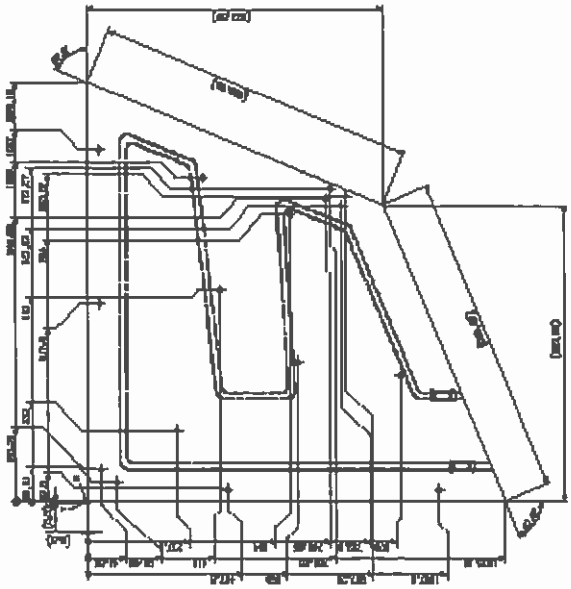

Fig. 12-3 - Main dimensions of Cryo-cooler radiator panel with condenser tubing routing (1/4 of the whole radiator is shown)

Questo documento contiene informazioni di proprietà di CARLO GAVAZZI SPACE SpA. Tutti i diritti sono riservati.
All information contained in this document are property of CARLO GAVAZZI SPACE SpA. All right reserved.

13. LOWER TOF

13.1 TEMPERATURE REFERENCE POINT

Req. Id. N.	Requirement	EQ	SS	SY	Remarks
AMSTH-13.1 -010	All the temperature requirements of the lower TOF sub-detector shall refer to Temperature Reference Points (TRP). The location of the TRPs is at PMT level, one per side of the TOF, relevant to the MT in mid location. Hence, totally 4 TRPs are foreseen.	ROD, S	ROD		

13.2 TEMPERATURE RANGES

Req. Id. N.	Requirement	EQ	SS	SY	Remarks
AMSTH-13.2 -010	The operative temperature range shall be: from -30 °C to +45 °C on the PMT, which corresponds to -32°C to +43°C on the accessible location for the Dallas sensors.	S (supplier), T	A, T	A	
AMSTH-13.2 -020	The non operative temperature range shall be: from -35 °C to +50°C.	S (supplier), T	A, T	A	

13.3 SHORT-TERM TEMPERATURE STABILITY

Req. Id. N.	Requirement	EQ	SS	SY	Remarks
AMSTH-13.3 -010	The peak-to-peak temperature variation along one orbit shall be within 5°C.		A		

13.4 TEMPERATURE GRADIENTS

Req. Id. N.	Requirement	EQ	SS	SY	Remarks
AMSTH-13.4 -010	The spatial temperature gradient between the TOF structure (carbon fiber box) and the PMTs shall not exceed 10°C.		A, T	A	

13.5 HEAT DISSIPATION

Req. Id. N.	Requirement	EQ	SS	SY	Remarks
AMSTH-13.5 -010	3.29W are dissipated on the 76 PMTs, 0.130 W are dissipated on the 4 SFEC boards, for a total of 0.52 W.	T	T		

Questo documento contiene informazioni di proprietà di CARLO GAVAZZI SPACE SpA. Tutti i diritti sono riservati.
All information contained in this document are property of CARLO GAVAZZI SPACE SpA. All right reserved.

Req. Id. N.	Requirement	EQ	SS	SY	Remarks
	The total heat dissipated is then 3.8W				

Questo documento contiene informazioni di proprietà di CARLO GAVAZZI SPACE SpA. Tutti i diritti sono riservati.
All information contained in this document are property of CARLO GAVAZZI SPACE SpA. All right reserved.

13.6 MECHANICAL DESIGN

Req. Id. N.	Requirement	EQ	SS	SY	Remarks
AMSTH-13.6 -010	A carbon fiber box is used to encapsulate the PMTs.		ROD		

13.7 SUB DETECTOR THERMAL I/F DESCRIPTION

13.7.1 CONDUCTIVE

Req. Id. N.	Requirement	EQ	SS	SY	Remarks
AMSTH-13.7.1 -010	The PMT are thermally decoupled from the structure.		ROD		
AMSTH-13.7.1 -020	A value of conductance lower than 1W/K is obtained on attachment rods.		ROD	ROD	

13.7.2 RADIATIVE

Req. Id. N.	Requirement	EQ	SS	SY	Remarks
AMSTH-13.7.2 -010	The TOF PMT boxes are completely surrounded by MLI Its external t/o properties shall be Beta Cloth (see par. 16)		ROD	I	
AMSTH-13.7.2 -020	TOF MLI shall weigh less than 12.8 Kg	T			

Questo documento contiene informazioni di proprietà di CARLO GAVAZZI SPACE SpA. Tutti i diritti sono riservati.
All information contained in this document are property of CARLO GAVAZZI SPACE SpA. All right reserved.

14.RICH

14.1 TEMPERATURE REFERENCE POINT

Req. Id. N.	Requirement	EQ	SS	SY	Remarks
AMSTH-14.1 -010	All the temperature requirements of the RICH sub-detector shall refer to Temperature Reference Points (TRP). RICH TRPs are the 8 mid-points of the main RICH structure.	ROD, S	ROD		

14.2 TEMPERATURE RANGES

Req. Id. N.	Requirement	EQ	SS	SY	Remarks
AMSTH-14.2 -010	The PMTs operative temperature range shall be: from -30 °C to +50°C.	S (supplier), T	A		
AMSTH-14.2 -020	ThePMTs non operative temperature range shall be: from -35°C(TBC by test results) to +60°C.	S (supplier), T	A		
AMSTH-14.2 -030	The electronic boards operative temperature range shall be: from -40 °C to +85°C.	T	A		
AMSTH-14.2 -040	The electronic boards non operative temperature range shall be: from -55 °C to +125°C.	T	A		

14.3 TEMPERATURE GRADIENTS

Req. Id. N.	Requirement	EQ	SS	SY	Remarks
AMSTH-14.3 -010	Temperature uniformity among the PMTs of different grids shall be 15°C		A	T	
AMSTH-14.3 -020	Temperature uniformity among the PMTs of the same grids shall be 6°C		A	T	

Questo documento contiene informazioni di proprietà di CARLO GAVAZZI SPACE SpA. Tutti i diritti sono riservati.
All information contained in this document are property of CARLO GAVAZZI SPACE SpA. All right reserved.

14.4 HEAT DISSIPATION

Req. Id. N.	Requirement	EQ	SS	SY	Remarks
AMSTH-14.4 -010	The RICH PMTs dissipation is 20.4W (dissipated on 680 PMT, 30 mW each).	T	T	T	
AMSTH-14.4 -020	Additional 29.5 W shall be dissipated on the PCB around the octagonal structure.		T	T	

14.5 SUB DETECTOR THERMAL I/F DESCRIPTION

14.5.1 CONDUCTIVE

Req. Id. N.	Requirement	EQ	SS	SY	Remarks
AMSTH-14.5.1 -010	RICH is coupled to the USS with a conductance larger than 1.5 W/K on each one of the 8 fixation points.		ROD		

14.5.2 RADIATIVE

14.5.2.1 MLI

Req. Id. N.	Requirement	EQ	SS	SY	Remarks
AMSTH-14.5.2.1 - 010	RICH is completely surrounded by TOF MLI.		ROD		Refer to TOF MLI

14.6 HEAT EXCHANGE REQUIREMENTS WITH NEIGHBORING EXPERIMENTS

Req. Id. N.	Requirement	EQ	SS	SY	Remarks
AMSTH-14.6 -010	RICH heat rejection in the ECAL direction shall be minimized.		ROD		

Questo documento contiene informazioni di proprietà di CARLO GAVAZZI SPACE SpA. Tutti i diritti sono riservati.
All information contained in this document are property of CARLO GAVAZZI SPACE SpA. All right reserved.

15. ECAL

15.1 TEMPERATURE REFERENCE POINT

Req. Id. N.	Requirement	EQ	SS	SY	Remarks
AMSTH-15.1 -010	All the temperature requirements of the ECAL sub-detector shall refer to Temperature Reference Points (TRP). The location of the TRP is on ECAL PMTs end caps, one per each side.	ROD, S	ROD		

15.2 TEMPERATURE RANGES

Req. Id. N.	Requirement	EQ	SS	SY	Remarks
AMSTH-15.2 -010	The operative temperature range shall be: from -20 °C to +40°C.		A, T		
AMSTH-15.2 -020	The non operative temperature range shall be: from -30 °C to +50°C.(see AD 3 minute of ECAL)		A,T		

15.3 SHORT-TERM TEMPERATURE STABILITY

Req. Id. N.	Requirement	EQ	SS	SY	Remarks
AMSTH-15.3 -010	5°C over an orbit period[7].		A		On ECAL detailed model

15.4 TEMPERATURE GRADIENTS

Req. Id. N.	Requirement	EQ	SS	SY	Remarks
AMSTH-15.4 -010	Uniformity between pancake (LEAD) and aluminum structure in order to avoid thermal induced stresses is requested. Up to 10°C of temperature difference are allowed.		A, T	T	On ECAL detailed model

[7] It is not an issue, due to the very large thermal capacitance of the subdetector.

Questo documento contiene informazioni di proprietà di CARLO GAVAZZI SPACE SpA. Tutti i diritti sono riservati.
All information contained in this document are property of CARLO GAVAZZI SPACE SpA. All right reserved.

15.5 HEAT DISSIPATION

Req. Id. N.	Requirement	EQ	SS	SY	Remarks
AMSTH-15.5 -010	49.6 W are dissipated on the 324 PMTs, 17.8W are dissipated on the EIBs for a total dissipation of 67.33W.	T	T	T	

15.6 SUB DETECTOR THERMAL I/F DESCRIPTION

15.6.1 RADIATIVE

15.6.1.1 MLI

Req. Id. N.	Requirement	EQ	SS	SY	Remarks
AMSTH-15.6.1.1 -010	MLI is assumed covering the ECAL bottom panel and brackets. Its external t/o properties are Beta Cloth (see par. 16)		ROD	I	
AMSTH-15.6.1.1 -020	ECAL MLI (ECAL bottom and ECAL brackets) shall weigh less than 1.2 Kg	T			

15.6.1.2 RADIATOR

Req. Id. N.	Requirement	EQ	SS	SY	Remarks
AMSTH-15.6.1.2 -010	Four radiators are fixed on the Back Panels. Thermo/optical properties are Silvered Teflon 10 mils (see par. 16)		ROD, I		

Questo documento contiene informazioni di proprietà di CARLO GAVAZZI SPACE SpA. Tutti i diritti sono riservati.
All information contained in this document are property of CARLO GAVAZZI SPACE SpA. All right reserved.

15.7 HEAT EXCHANGE REQUIREMENTS WITH NEIGHBORING EXPERIMENTS

Req. Id. N.	Requirement	EQ	SS	SY	Remarks
AMSTH-15.7 -010	ECAL shall reject almost all its power by radiation, being the heat leak towards the USS02 negligible.		ROD		

16.USS

16.1 TEMPERATURE REFERENCE POINT

Req. Id. N.	Requirement	EQ	SS	SY	Remarks
AMSTH-16.1 -010	All the temperature requirements of the USS shall refer to Temperature Reference Points (TRP). The location of the TRP is on the 4 USS upper Trunnion bridges, on the lower Trunnion bridges and on the sill joint where the CDD is located	ROD, S	ROD		

16.2 TEMPERATURE RANGES

Req. Id. N.	Requirement	EQ	SS	SY	Remarks
AMSTH-16.2 -010	USS02 Temperature limits are from –50°C to + 90°C		A	A	TBC by NASA/J-S

16.3 SHORT-TERM TEMPERATURE STABILITY

N/A

16.4 TEMPERATURE GRADIENTS

Req. Id. N.	Requirement	EQ	SS	SY	Remarks
AMSTH- 16.4 -010	USS shall have an instantaneous temperature gradient smaller than 80°C (e.g. +40°C / -40°C)			A	To be cross checked with structural analysis

Questo documento contiene informazioni di proprietà di CARLO GAVAZZI SPACE SpA. Tutti i diritti sono riservati.
All information contained in this document are property of CARLO GAVAZZI SPACE SpA. All right reserved.

16.5 HEAT DISSIPATION

N/A

16.6 SUB DETECTOR THERMAL I/F DESCRIPTION

16.6.1 CONDUCTIVE

N/A

16.6.2 RADIATIVE

Req. Id. N.	Requirement	EQ	SS	SY	Remarks
AMSTH-16.6.2 -010	USS02 thermo optical properties are shown in Fig. 16-1.			ROD, I	
AMSTH-16.6.2 -020	USS02 and USS silvered Teflon tape shall weigh less than 4 Kg	T			

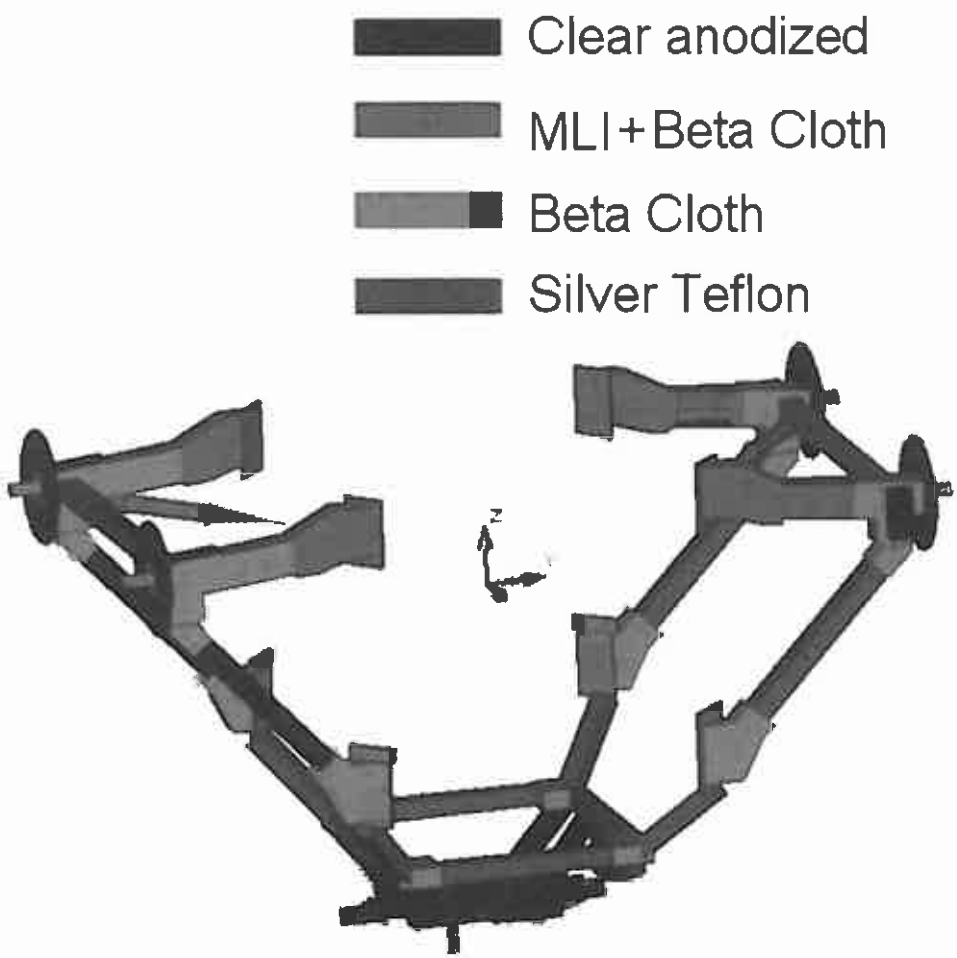

Fig. 16-1 - USS02 Thermo-optical properties

Questo documento contiene informazioni di proprietà di CARLO GAVAZZI SPACE SpA. Tutti i diritti sono riservati.
All information contained in this document are property of CARLO GAVAZZI SPACE SpA. All right reserved.

16.6.2.1 MLI

Req. Id. N.	Requirement	EQ	SS	SY	Remarks
AMSTH-16.6.2.1 -010	All USS-02 MLI shall weigh less than 5.2 Kg	T			

16.7 HEAT EXCHANGE REQUIREMENTS WITH NEIGHBORING EXPERIMENTS

N/A

17.ISS/STS INTEGRATION HARDWARE

17.1 THERMAL REQUIREMENTS

Req. Id. N.	Requirement	EQ	SS	SY	Remarks
AMSTH-15.7 -010	UMA Passive Half Spring Operating range: From –67°C to +164°C Non operating range From –67°C to +164°C	T		A	
AMSTH-15.7 -020	UMA Connector Backshell Operating range: From –67°C to +93°C Non operating range From –67°C to +93°C	T		A	
AMSTH-15.7 -030	PVGF Operating range: From –70°C to +90°C Non operating range From –157°C to +121°C	T		A	
AMSTH-15.7 -040	FRGF Operating range: From –76°C to +168°C Non operating range From –156°C to +121°C	T		A	

Questo documento contiene informazioni di proprietà di CARLO GAVAZZI SPACE SpA. Tutti i diritti sono riservati.
All information contained in this document are property of CARLO GAVAZZI SPACE SpA. All right reserved.

18.SYSTEM LEVEL REQUIREMENTS

18.1 TEMPERATURE REFERENCE POINT

Req. Id. N.	Requirement	EQ	SS	SY	Remarks
AMSTH-18.1 -010	Each subsystem developer (in agreement with TWG) shall define the location of TRP/s such that their temperatures can be related to the general status of the subsystem and the critical components. TRP location shall be precisely defined in the subsystem ICD. A dedicated node (addressed in the subsystem thermal reports) shall be identified for any existing Temperature Reference Point (TRP).		ROD, S		

18.2 TEMPERATURE REQUIREMENTS

Req. Id. N.	Requirement	EQ	SS	SY	Remarks
AMSTH-18.2 -010	All the sub-systems TRP/s operative and survival temperature ranges described in the previous sections shall be respected during AMS-02 operations inside the STS cargo-bay during the unmated phases as requested by AD[4]. This is valid assuming all the other requirements related to dissipated power, thermal-optical properties and heater power need are met.			A	
AMSTH-18.2 --020	All the sub-systems TRP/s operative and survival temperature ranges described in the previous sections shall be respected during AMS-02 operations inside the STS cargo-bay during docked phase. This is valid assuming all the other requirements related to dissipated power, thermal-optical properties and heater power need are met.			A	
AMSTH-18.2 -030	All the sub-systems TRPs survival temperature ranges described in the previous sections shall be respected during AMS-02 transfer from STS cargo-bay to the intermediate HAND-OFF position. This is valid assuming all the other requirements related to the transfer duration, thermal-optical properties and hot soaking before the transfer are met.			A	

Questo documento contiene informazioni di proprietà di CARLO GAVAZZI SPACE SpA. Tutti i diritti sono riservati.
All information contained in this document are property of CARLO GAVAZZI SPACE SpA. All right reserved.

Req. Id. N.	Requirement	EQ	SS	SY	Remarks
AMSTH-18.2 -040	All the sub-systems TRPs operative and survival temperature ranges described in the previous sections shall be respected during AMS-02 transfer from the HAND-OFF position to the ISS truss. This is valid assuming all the other requirements related to the transfer duration, thermal-optical properties , heater power need and sequence of operation are met.			A	
AMSTH-18.2 -050	All the sub-systems TRPs operative and survival temperature ranges described in the previous sections shall be respected during AMS-02 nominal operations on the ISS truss. This is valid assuming all the other requirements related to dissipated power, thermal-optical properties, operative modes and heater power need are met.			A	
AMSTH-18.2 -060	All the sub-systems TRPs survival temperature ranges described in the previous sections shall be respected during outage of power scenarios. This is valid assuming outage of power scenario duration is met.			A	

18.3 MISSION PHASES

Req. Id. N.	Requirement	EQ	SS	SY	Remarks
AMSTH-18.3 -010	All the STS unmated phases AMS-02 shall undergo are described in RD[10].				
AMSTH-18.3 -020	AMS-02 is removed from the Shuttle cargo bay by the SRMS (Shuttle Remote Manipulator System). The SRMS will bring AMS-02 to an intermediate position (HAND-OFF position) where the AMS-02 Experiment shall be grasped by the SSRMS (Space Station Remote Manipulator System) robotic arm. The Transfer phase from STS cargo-bay to the HAND-OFF position shall last not more than 4 hours.			A	
AMSTH-18.3 -030	The Transfer phase from the HAND-OFF position to the ISS truss site shall last not more than 5 hours (TBC)			A	

Questo documento contiene informazioni di proprietà di CARLO GAVAZZI SPACE SpA. Tutti i diritti sono riservati.
All information contained in this document are property of CARLO GAVAZZI SPACE SpA. All right reserved.

Req. Id. N.	Requirement	EQ	SS	SY	Remarks
AMSTH-18.3 -040	AMS-02 shall be designed to withstand outage of power scenarios in the extreme environment. Each outage of power scenarios shall last not more than 8 hours.	T on enectronic s		A	

18.4 POWER

18.4.1 STS UNMATED PHASES

Req. Id. N.	Requirement	EQ	SS	SY	Remarks
AMSTH-18.4.1 -010	During STS unmated phases AMS-02 is connected to feed B.		ROD (heaters)	ROD, A	Cold case analysis condition
AMSTH-18.4.1 -020	The AMS-02 power profile during the STS unmated phases shall not exceed 1800W at 120V			T	

18.4.2 STS DOCKING PHASE

Req. Id. N.	Requirement	EQ	SS	SY	Remarks
AMSTH-18.4.2 -010	When STS is docked to the ISS, AMS-02 is connected to feed B.			ROD, A	Cold case analysis condition
AMSTH-18.4.2 -020	The AMS-02 power profile during the STS docking phase shall not exceed 1800W at 120V			T	

18.4.3 TRANSFER PHASE

Req. Id. N.	Requirement	EQ	SS	SY	Remarks
AMSTH-18.4.3 -010	No power is supplied to the AMS-02 experiment while attached to the SRMS; that means no electrical connectivity power nor data.			ROD	
AMSTH-18.4.3 -020	During the transfer phase from the Hand-Off position to the ISS truss , AMS-02 is connected via BCS/PVGF to feed A or feed B.			ROD, A	Cold case analysis condition
AMSTH-18.4.3 -030	The AMS-02 power profile in the transfer phase from the Hand-Off position to the ISS truss site (via SSRMS) shall be such as to draw no more than 16.7 amps over the minimum to maximum voltage range.			A, T	

Questo documento contiene informazioni di proprietà di CARLO GAVAZZI SPACE SpA. Tutti i diritti sono riservati.
All information contained in this document are property of CARLO GAVAZZI SPACE SpA. All right reserved.

Req. Id. N.	Requirement	EQ	SS	SY	Remarks
AMSTH-18.4.3 -040	During the transfer phase from the Hand-Off position to the ISS truss , the input voltage to the PDS (via SSRMS) shall be within the range 106.1V to 126.5V			ROD	

18.4.4 NOMINAL OPERATIONS ON ISS

Req. Id. N.	Requirement	EQ	SS	SY	Remarks
AMSTH-18.4.4 -010	During the nominal operations on ISS, AMS-02 is connected to feed A or feed B.			ROD, A	Cold case analysis condition
AMSTH-18.4.4 -020	The AMS-02 power profile on the ISS during the nominal operations shall not exceed 2400W at 120V			T	

18.5 HEATERS

Req. Id. N.	Requirement	EQ	SS	SY	Remarks
AMSTH-18.5 -010	During STS unmated phases, the thermostatically controlled heaters shall keep the non operative subsystems above the lower survival limit. and the operative subsystems above the minimum operative limits.			A, T	Thermostats clicking
AMSTH-18.5 -020	During the STS docking phases the thermostatically controlled heaters shall keep the non operative subsystems above the lower survival limit and the operative subsystems above the minimum operative limits.			A, T	Thermostats clicking
AMSTH-18.5 -030	Before the transfer from STS cargo-bay to the Hand-Off position, heaters shall suitably warm-up AMS-02 in order to keep AMS-02 above the survival limits at the end of the transfer.			A, T	Thermostats clicking and cooling down behaviour
AMSTH-18.5 -040	In Hand-Off position as soon as AMS-02 is powered , AMS-02 120V ISS supplied heaters (thermostatically controlled) shall bring PDS TRP to the minimum switch-on temperature under extreme cold case in the voltage range 106.1V to 126.5V.			A, T	

Questo documento contiene informazioni di proprietà di CARLO GAVAZZI SPACE SpA. Tutti i diritti sono riservati.
All information contained in this document are property of CARLO GAVAZZI SPACE SpA. All right reserved.

Req. Id. N.	Requirement	EQ	SS	SY	Remarks
AMSTH-18.5 -050	As soon as PDS is powered up, the AMS-02 120V PDS supplied heaters default on (see heaters document) shall keep all AMS-02 subsystem TRPs above the survival limits un-definitively if power budget requirements are met.			A, T	
AMSTH-18.5 -060	Onboard ISS , AMS-02 120V ISS supplied heaters (thermostatically controlled) shall be sized to bring PDS TRP to the minimum switch-on temperature under extreme cold case in the voltage range 113V to 126.5V.			A, T	
AMSTH-18.5 -070	As soon as PDS is powered up, the AMS-02 120V PDS supplied heaters shall be sized in order to keep electronics and detectors above the minimum switch-on/operative limits under the extreme cold cases.			A, T	
AMSTH-18.5 -080	AMS-02 heaters shall be sized to satisfy the switch-on requirements when supplied by one bus ONLY (A or B).			A	Cold case analysis condition
AMSTH-18.5 -090	The maximum heater power density for heater foils shall be 3 W/in^2 (0.465 W/cm^2) at the maximum voltage (126.5V).		ROD		

The 120V and 28V heater description is contained in RD[6].

Questo documento contiene informazioni di proprietà di CARLO GAVAZZI SPACE SpA. Tutti i diritti sono riservati.
All information contained in this document are property of CARLO GAVAZZI SPACE SpA. All right reserved.

19.OPTICAL PROPERTIES

BEGIN OF LIFE

Beta Cloth	ε = 0.9	α = 0.22
White paint (SG 121)	ε = 0.94	α = 0.18
aluminized polymide:	ε = 0.05	α = 0.14
Silver Teflon 5mil	ε = 0.78	α = 0.08
Silver Teflon 10mil	ε = 0.89	α = 0.09
Mixed properties (on Magnet)	ε = 0.80	α = 0.16
anodized aluminum (clear anodize)	ε = 0.84	α = 0.35
RICH Mirror	ε = 0.82	α = 0.03
black anodized	ε = 0.82	α = 0.88
gold anodized AL	ε = 0.84	α = 0.59

END OF LIFE

Beta Cloth	ε = 0.86	α = 0.47
White paint (SG 121)	ε = 0.88	α = 0.27
aluminized polymide:	ε = 0.05	α = 0.14
Silver Teflon 5mis	ε = 0.75	α = 0.13
Silver Teflon 10mil	ε = 0.85	α = 0.15
Mixed properties (on Magnet)	ε = 0.77	α = 0.32
anodized aluminum (clear anodize)	ε = 0.81	α = 0.77
RICH Mirror	ε = 0.75	α = 0.1
black anodized	ε = 0.78	α = 0.88
gold anodized AL	ε = 0.84	α = 0.68

Questo documento contiene informazioni di proprietà di CARLO GAVAZZI SPACE SpA. Tutti i diritti sono riservati.
All information contained in this document are property of CARLO GAVAZZI SPACE SpA. All right reserved.