ORIGINALE ARCHIVIO

CARLO GAVAZZI SPACE SpA

AMS02-TCS

Tipo Doc.: *Doc.Type:*	PROCEDURE			N° DRD: *DRD N°:*	DEL 043 AND DEL 049
N° Doc.: *Doc. N°:*	**AMSTCS-PR-CGS-011**	Ediz.: *Issue:* **2**	Data: *Date:* **15/12/2008**	Pagina *Page* **1**	Di *Of* **17**
Titolo : *Title :*	**MLI INTEGRATION REQUIREMENT SPECIFICATIONS (VERIFICATION CRITERIA) AND INTEGRATION PROCEDURE**				

	Nome & Funzione *Name & Function*	Firma *Signature*	Data *Date*
Preparato da: *Prepared by:*	Vettore C. (DT/MT)		15.12.08
Approvato da: *Approved by:*	Cinquepalmi C. (PA/CC)		18/12/08
	Cremonesi L. (PA/QA)		18.12.08
	Molina M. (DT/MT)		18/12/08
	Vettore C. (DT/MT)		15/12/08
Applicazione autorizzata da: *Application authorized by:*	Olivier M. (DT/MT)		18.12.08
Customer / Higher Level Contractor			
Accettato da: *Accepted by:*	ASI		
Approvato da: *Approved by:*	ASI		

LISTA DI DISTRIBUZIONE *DISTRIBUTION LIST*	N	A	I
Interna / *Internal*			
Lorenzi P.	1		X
Vitta M. (PA/QA)	1		X
Dell'Acqua A.	1		X
Esterna / *External*			
E. Russo (ASI)	1		X

N=Numero di copie A=Applicazione I=Informazione
N=Number of copy A=Application I=Information

Gestione documenti: *Data Management:* Firma / *Signature* Data / *Date* 18/12/08

File: AMSTCS-PR-CGS-011 Issue2.doc

Questo documento contiene informazioni di proprietà di CARLO GAVAZZI SPACE SpA: Tutti i diritti sono riservati
All information contained in this document are property of CARLO GAVAZZI SPACE SpA. All right reserved.

REGISTRAZIONE DELLE MODIFICHE / *CHANGE RECORD*

EDIZIONE *ISSUE*	DATA *DATE*	AUTORIZZAZIONE *CHANGE AUTHORITY*	OGGETTO DELLA MODIFICA E SEZIONI AFFETTE *REASON FOR CHANGE AND AFFECTED SECTIONS*
1	31/03/08		
2	15/12/2008	TRR	Section 4. Generic MLI blankets integration procedure is added as Annex A

Questo documento contiene informazioni di proprietà di CARLO GAVAZZI SPACE SpA. Tutti i diritti sono riservati.
All information contained in this document are property of CARLO GAVAZZI SPACE SpA. All right reserved.

LISTA DELLE PAGINE VALIDE / *LIST OF VALID PAGES*

PAGINA *PAGE*	EDIZIONE *ISSUE*	PAGINA *PAGE*	EDIZIONE *ISSUE*	PAGINA *PAGE*	EDIZIONE *ISSUE*	PAGINA *PAGE*	EDIZIONE *ISSUE*	PAGINA *PAGE*	EDIZIONE *ISSUE*
1 - 17	2								
Annex A A1 to A42	2								

Questo documento contiene informazioni di proprietà di CARLO GAVAZZI SPACE SpA. Tutti i diritti sono riservati.
All information contained in this document are property of CARLO GAVAZZI SPACE SpA. All right reserved.

TABLE OF CONTENT

1. SCOPE **6**

2. DOCUMENTS **7**

2.1 APPLICABLE DOCUMENTS 7
2.2 REFERENCE DOCUMENTS 8

3. TECHNICAL SPECIFICATION **9**

3.1 REQUIREMENTS 9
MECHANICAL REQUIREMENTS 9
THERMAL REQUIREMENTS 12
ELECTRICAL REQUIREMENTS 13

4. INTEGRATION PROCEDURE **17**

ANNEX-A : GENERIC INTEGRATION PROCEDURE FOR MLI BLANKETS AND FOILS (QSTD-MPRC-3054-AAE ISSUE 1) **17**

Questo documento contiene informazioni di proprietà di CARLO GAVAZZI SPACE SpA. Tutti i diritti sono riservati.
All information contained in this document are property of CARLO GAVAZZI SPACE SpA. All right reserved.

LIST OF TABLES

Table 3-1 MLI – Integration Requirement specification table. 15
Table 3-2 Verification table columns meaning..... 16

LIST OF FIGURES

Questo documento contiene informazioni di proprietà di CARLO GAVAZZI SPACE SpA. Tutti i diritti sono riservati.
All information contained in this document are property of CARLO GAVAZZI SPACE SpA. All right reserved.

1. SCOPE

This documents defines the requirements and procedure for the integration of the MLI blankets used on the AMS-02 payload.
Thermal blankets will be used in conjunction with the thermal control system (TCS) to protect AMS-02 components from temperature extremes.
Requirements have been derived from "Multi-Layer Insulation for the Alpha Magnetic Spectrometer Guidelines", [AD11].

MLI integration requirements are categorized as follow:

- Mechanical Requirements;
- Thermal requirements;
- Electrical requirements;

The document merges the contract deliverable DEL 043 and DEL 049:

- Section 3.1 of the present document contains MLI integration criteria relevant to DEL 049
- Section 4 of the present document contains the MLI integration procedure relevant to DEL 043 ~~and shall be written in the next issue of this document for the relevant milestone.~~

Questo documento contiene informazioni di proprietà di CARLO GAVAZZI SPACE SpA. Tutti i diritti sono riservati.
All information contained in this document are property of CARLO GAVAZZI SPACE SpA. All right reserved.

2. DOCUMENTS

Documents here below identified are applicable and/or reference for the activities described in the present document and are considered part of it to the extent specified herein.

2.1 APPLICABLE DOCUMENTS

The documents listed here below are applicable to the present proposal for the extent recalled on it:

CONTRACTUAL

AD1 Capitolato generale ASI, available on http://www.asi.it/html/norme/cap_gen.pdf

AD2 Richiesta d'offerta per Programma AMS, attività di Fase C/D – Prot. ASI 006194 – 25/07/2007

AD2bis CapitolatoTecnico "Progetto: AMS Attività di fase C/D" Doc. N. DC-IPC-2007-062

AD3 Tailoring di primo livello delle norme ECSS, serie M-E-Q – Progetto AMS attività di fase C/D- Doc. n° DC-IPC-2007-063 Rev. A

MANAGEMENT

AD4 "ECSS Glossary" – Doc. ECSS-P-001 Rev. B

PRODUCT ASSURANCE

AD5 "Product Assurance Requirements - Progetto AMS attività di fase C/D "-Doc. n° DC-IPC-2007-064 Rev. A

AD6 "Istruzione Operativa "Norme per la redazione del Piano di Assicurazione del Prodotto (PA Plan)", Doc. OP-IPC-2005-008

AD7 "Sistemi di Gestione per la Qualità", doc. UNI EN ISO 9001:2000

AD8 "Quality Management Plan for the Alpha Magnetic Spectrometer 02 (AMS-02) Experiment", Doc. JSC63164, Basic Version, 09/21/2005

AD9 "Master Verification Plan (MVP)", Doc. JSC 29788, Iss. Draft, 8/21/2006

AD10 "PA REQUIREMENTS DC-IPC-2007-064 RevA Conformity",doc AMSCD-RQ-CGS-001 issue 1

ENGINEERING AND TECHNICAL

AD11 "Multi-Layer Insulation for the Alpha Magnetic Spectrometer Guidelines", Doc. CTSD-SH-1782, 9/30/2005

AD12 "AMS-02 Structural Verification Plan for the Space Transportation System and the International Space Station", Doc. JSC28792, Iss.D, March 2005

AD13 "Experiment/Payload Integration Hardware Interfaces - Part I", Doc. JSC29095, Iss.A, 06/01/2002

AD14 "Experiment/Payload Integration Hardware Interfaces - Part II", Doc. JSC29095, Iss.A, August 2004

AD15 "Experiment/Vacuum Case Payload Integration Hardware Interface", Doc. JSC29202, Iss.C, March 2005

AD16 "AMS-02 Thermal Control Requirements", Doc. AMS-RQ-CGS-001, Iss.1, April 2007

AD17 "Attached Payload Interface Requirements Document , Doc. SSP 57003, Iss. B, 17/06/03

Questo documento contiene informazioni di proprietà di CARLO GAVAZZI SPACE SpA. Tutti i diritti sono riservati.
All information contained in this document are property of CARLO GAVAZZI SPACE SpA. All right reserved.

AD18 "Attached Payload Hardware Interface Control Document, Doc. SSP 57004, Iss. B, 13/06/03

AD19 "AMSPDS-RP-CGS-001", Doc. PDS Design Description, Iss.2, July 05

AD20 "AmsE-PPL", AMS Electronics Preferred Parts List, available on

(http://ams.cern.ch/AMS/Electronics/Parts/), Iss.1, Nov 01 configured on doc PDS-LI-CGS-006 iss 1

AD21 "PDS ICD - Interface Control Document", Doc. AMSPDS-IC-CGS-001, Iss.3, July 05

AD22 "PDS Specifications", Doc. AMS-RQ-CGS-002, Iss.1, April 07

2.2 REFERENCE DOCUMENTS

[DR 1] Phase II Flight Safety Data Package for the Alpha Magnetic Spectrometer - 02 (AMS-02) Version Basic JSC49978 , 2006

[DR 2] Alpha Magnetic Spectrometer – 02 Assembly and Testing Integration Plan, Version A, JSC63123, 28-11-2005

[DR 3] Dichiarazione INFN sulla consegna di componenti – lettera del 20 maggio 2007 (prot. ASI n. 0009869)

[DR 4] Capitolato gestionale ASI OP-IPC-2005-010-E

Questo documento contiene informazioni di proprietà di CARLO GAVAZZI SPACE SpA. Tutti i diritti sono riservati.
All information contained in this document are property of CARLO GAVAZZI SPACE SpA. All right reserved.

3. TECHNICAL SPECIFICATION

3.1 REQUIREMENTS

Verification N°	Requirement Text	RFW Status	RFD Status	NCR	Ver. Method	Ver. Status	Ver Level	Document Refernce
	MECHANICAL REQUIREMENTS							
001	**Thermal hardware delivery:** Verify the thermal hardware delivery matches the Deliverable Items List provided by the Supplier. Remarks: Thermal hardware includes: blankets, attachment hardware (stand-off, Velcro, lacing, clip-washer), grounding hardware, miscellaneous hardware (manufacturing, fit-check and bonding templates, manufacturer documentation)				I		ACC	
002	**Documentation:** Verify the delivery of the following documents to perform integration: ▪ Shipping documents (containing Deliverable Items list); ▪ Manufacturer acceptance test reports - blanket inspection sheets; ▪ Blanket Historical Record; ▪ Integration Procedure for MLI Blankets and Foils in ATS format; ▪ Blanket Certificate of Conformance; ▪ Generic Handling procedure for thermal hardware; ▪ Integration Sign-Off sheets; ▪ Adhesive data sheets; ▪ Reduced size template drawings; ▪ List of hardware to be integrated ▪ Open work list;				I		ACC	

Questo documento contiene informazioni di proprietà di CARLO GAVAZZI SPACE SpA: Tutti i diritti sono riservati
All information contained in this document are property of CARLO GAVAZZI SPACE SpA. All right reserved.

Verification N°	Requirement Text	RFW Status	RFD Status	NCR	Ver. Method	Ver. Status	Ver Level	Document Refernce
003	**Blanket integrity:** Verify thermal blankets do not show: ▪ Particular Contamination ▪ Scratches on the surfaces/coatings; ▪ Mechanical damages in the foils/groundings				I		ACC	
004	**Conformance with design:** Verify the respective blanket has been manufactured in accordance with the respective template and all additional instruction provided by the manufacturer. Remarks: Verify blanket dimensions, the location of attachment points (Stan-off, Velcro, lacing) and slit, flap, holes in the blanket				R / I		ACC	
005	**Blanket weight:** Verify the mass of the blanket respects mass requirements. Record the measured value on the Blanket Inspection Sheet				T		ACC	
006	**Stand-off mechanical fixation:** The mechanical fixation of Stand-off must be checked. A bonding sample with a stand-off glued on an aluminum sample must be produced. The samples and the remaining adhesive mixture must be kept for traceability reasons. Remarks: Pull-out and shear-load test are required when stand-off are glued to surfaces whose surface treatments are not covered by the existing MLI supplier qualification reports.				T / I		INT	
007	**Lacing mechanical fixation:** The Mechanical fixation of Lacing must be verified. Remarks: verify lacing attachment points are fasten by visual inspection. Check the laces are tied off in a double knot (a square knot with an extra twist).				I		INT	

Questo documento contiene informazioni di proprietà di CARLO GAVAZZI SPACE SpA. Tutti i diritti sono riservati.
All information contained in this document are property of CARLO GAVAZZI SPACE SpA. All right reserved.

Verification N°	Requirement Text	RFW Status	RFD Status	RCR	Ver. Method	Ver. Status	Ver Level	Document Refernce
008	**Velcro mechanical fixation:** The mechanical fixation of Velcros must be checked. A bonding sample with a velcro glued on an aluminum sample must be produced. The sample must be kept for traceability reasons. Remarks: Verify, on the Blanket Historical Record, the velcros mounting/dismounting cycles have not exceeded 10 cycles. In case that it can not be ensured that the velcros mounting/dismounting cycles have not exceeded 10 cycles, a visual inspection on random samples is mandatory prior to launch/test.				R / I		INT	
009	**Clip-washer mechanical fixation:** The mechanical fixation of Clip washers must be checked. Remarks: Verify, on the blanket Historical Record, the clip-washers mounting/dismounting cycles have not exceeded 20. In case that it can not be ensured that the clip-washers mounting/dismounting cycles have not exceeded 20 cycles, a visual inspection on random samples is mandatory prior to launch/test.				R / I		INT	
010	**Blanket fit with attachment points:** Verify the blanket attachment locations match with structure attachment points. Remarks: Verify all attachments devices have been used and correctly coupled with blanket attachment points				I		INT	

Questo documento contiene informazioni di proprietà di CARLO GAVAZZI SPACE SpA. Tutti i diritti sono riservati.
All information contained in this document are property of CARLO GAVAZZI SPACE SpA. All right reserved.

Verification N°	Requirement Text	RFW Status	RFD Status	NCR	Ver. Method	Ver. Status	Ver Level	Document Refernce
011	**Blanket fit:** Verify the blanket nicely fit to the structure – i.e. the blanket shall neither be compressed nor have a gap to the structure larger than necessary. Remarks: Verify all attachments point have been used.				I		INT	
012	**Blanket venting functional task:** Verify the MLI blanket is designed so that all trapped gases can be vented to the atmosphere within 48 hours after launch.				R		INT	
013	**Blanket venting return path:** Verify the vent paths do not provide a return path for sunlight				R		INT	
014	**Grounding points location on the structure:** Verify on AMS02 structure the availability of booked grounding points				I		INT	
015	**Sharp edges on the structure:** Verify no sharp edges are in contact with the blanket. Remarks: In case of sharp edges (structural side) protect the MLI by locally reinforcing the innermost layer with a 3 mil plain Kapton foil. The kapton foil shall be sewn together with the innermost layer.				I		INT	
	THERMAL REQUIREMENTS							
016	**Blanket identification:** Verify marking tag correct position and references. Remarks: Marking tag shall be located on the backside of the blanket. Verify blanket S/N, Model, Part.-No				R / I		ACC	

Questo documento contiene informazioni di proprietà di CARLO GAVAZZI SPACE SpA. Tutti i diritti sono riservati.
All information contained in this document are property of CARLO GAVAZZI SPACE SpA. All right reserved.

Verification N°	Requirement Text	RFW Status	RFD Status	NCR	Ver. Method	Ver. Status	Ver Level	Document Refernce
017	**Blanket lay-up:** Verify the blanket lay-up conformance with design. Remarks: Verify blanket lay-up on marking tag (number and type of layers)				R / I		ACC	
018	**Blanket coverage- covered surfaces:** Verify MLI blanket performs a proper fit of surfaces to be covered. Remarks: To be performed in case some additional hardware has changed blanket original position.				R / I		INT	
019	**Blanket coverage- overlapping:** Verify MLI blanket overlapping conformance with design. Remarks: If seen necessary during final inspection, some blankets overlap shall be partially closed with tape to avoid additional thermal losses				R / I		INT	
020	**Blanket coverage- not covered surfaces:** Verify MLI blanket allows the exposure of surfaces not to be covered. Remarks: To be performed in case some additional hardware has changed blanket original position				R / I		INT	
	ELECTRICAL REQUIREMENTS							
021	**Bonding lead (blanket side) routing/fixing verification:** Verify that bonding leads (blanket side) is routed and fixed with Kapton tape (with acrylic adhesive) for each grounding wire				I		INT	

Questo documento contiene informazioni di proprietà di CARLO GAVAZZI SPACE SpA. Tutti i diritti sono riservati.
All information contained in this document are property of CARLO GAVAZZI SPACE SpA. All right reserved.

Verification N°	Requirement Text	RFW Status	RFD Status	NCR	Ver. Method	Ver. Status	Ver Level	Document Refernce
022	**Bonding lead (blanket side) ID verification:** Verify the serial number printed on the shrink sleeve at the connector side of the bonding lead (on the blanket side) has been recorded on the Integration Sign-off sheets				I		INT	
023	**Bonding lead (structure side) routing/fixing verification:** Verify that bonding leads (structure side) is routed and fixed, by Kapton tape (with acrylic adhesive), to the structural grounding point for each grounding wire				I		INT	
024	**Bonding lead (structure side) ID verification:** Verify the serial number printed on the shrink sleeve at the connector side of the bonding lead (on the structure side) has been recorded on the Integration Sign-off sheets				I		INT	
025	**Bonding lead (structure side) length verification:** Verify the length of the bonding lead (used for mounting on the structural grounding point) has been recorded on the Integration Sign-off sheets				I		INT	
026	**Bonding lead connection verification:** Verify the structural bonding leads and the blanket bonding leads are connected and secured, for each grounding wire. Remarks: the structural bonding leads and the blanket bonding leads must be connected and secured with a piece of 1 mil plain kapton 966 or 9460 PSA tape, wound around the connector				I		INT	

Questo documento contiene informazioni di proprietà di CARLO GAVAZZI SPACE SpA. Tutti i diritti sono riservati.
All information contained in this document are property of CARLO GAVAZZI SPACE SpA. All right reserved.

Verification N°	Requirement Text	RFW Status	RFD Status	NCR	Ver. Method	Ver. Status	Ver Level	Document Refernce
027	**Bonding lead electrical resistance verification:** Verify the electrical resistance between the rivet of one bonding point and its structural reference is compliant with the applicable requirements. Record the values of electrical resistance for each grounding wire on the Integration Sign-off sheets. Remarks: Electrical resistance must be measured with a calibrated Ohmmeter and recorded in the Integration Sign-off sheets. Electrical resistance from ground to spacecraft structure must be < 1 Ω				T		INT	
028	**Bonding point number verification:** Verify the requirement on standard number of bonding points per MLI blanket is met. Remarks: The standard number of bonding points per MLI blanket is given as follow: ▪ Area < 100cm^2 : no grounding; ▪ 100cm^2<area<4m^2 : 2 bonding points; ▪ Area>4m^2 : >2 bonding points (in addition 1 bonding point for each additional 4 m^2)				I		ACC	

Table 3-1 MLI – Integration Requirement specification table.

Questo documento contiene informazioni di proprietà di CARLO GAVAZZI SPACE SpA. Tutti i diritti sono riservati.
All information contained in this document are property of CARLO GAVAZZI SPACE SpA. All right reserved.

VERIFICATION TABLE COLUMNS MEANING

TITLE	MEANING
Verification Number N°	Requirement Number (Sequential)
Requirement Text	Requirement Text (for info)
RFW Status	Request For Waiver status
RFD Status	Request For Deviation status
NCR	Non Conformance Report status
Ver. Method	Verification Method, one of: **T** - Test; **R** - Review of design; **A** - Analysis; **I** - Inspection;
Ver. Status	Status of requirements verification;
Ver. Level	Activities Level (Acceptance or Integration)
Reference Documents	Reference to the Documents describing the verification status (i.e.: Design Report, Structural Analysis, Test Report, Drawings, etc.)

Table 3-2 Verification table columns meaning.

Questo documento contiene informazioni di proprietà di CARLO GAVAZZI SPACE SpA. Tutti i diritti sono riservati.
All information contained in this document are property of CARLO GAVAZZI SPACE SpA. All right reserved.

4. INTEGRATION PROCEDURE

~~TO BE WRITTEN. SEE CHP.1~~

The AMS-02 MLI blankets integration procedure, conceived as a generic integration procedure to be adjusted to the different blankets, is annexed to this document.

ANNEX-A : GENERIC INTEGRATION PROCEDURE FOR MLI BLANKETS AND FOILS (QSTD-MPRC-3054-AAE ISSUE 1)

Questo documento contiene informazioni di proprietà di CARLO GAVAZZI SPACE SpA: Tutti i diritti sono riservati
All information contained in this document are property of CARLO GAVAZZI SPACE SpA. All right reserved.

ANNEX A – GENERIC INTEGRATION PROCEDURE FOR MLI BLANKETS AND FOILS (QSTD-MPRC-3054-AAE issue 1.0)

Questo documento contiene informazioni di proprietà di CARLO GAVAZZI SPACE SpA. Tutti i diritti sono riservati.
All information contained in this document are property of CARLO GAVAZZI SPACE SpA. All right reserved.

AAE-CADM
12. 10. 2006
RECEIVED

Quality Standard

Generic Integration Procedure for MLI Blankets and Foils

DRL: -
CI-No.: -

	NAME:	FUNCTION:	SIGNATURE:	DATE:
Prepared:	C. Ranzenberger	Thermal Engineer		20/09/2006
Checked:	A. Köksal	AIV & Facility Manager		28/9/06
Checked:	A. Potakowskyj	Product Assurance		28/9/06
Authorized:	J Kornigg	Process Owner		11/10/06

This document is property of AUSTRIAN AEROSPACE Ges.m.b.H.

Document No: **QSTD-MPRC-3054-AAE**

Issue No: **1.0**

Issue Date: **26 Aug 2006**

DRL: -

CI-No: -

Distribution:

Internal: Intranet

External: -

Number of pages of main document (incl. cover pages, excl. annexes etc.)**: 41**

Number of pages attached (annexes etc.)**: -**

Document Change Log:

Issue	Date	Modified Pages	Description
1.0	26 Aug 2006	all	Initial Issue

TABLE OF CONTENTS

1. INTRODUCTION 1
1 1 SCOPE 1
1.2 THERMAL BLANKETS 1
1 3 ACRONYMS 2

2. DOCUMENTS 3
2.1 APPLICABLE DOCUMENTS 3
2.2 REFERENCE DOCUMENTS 3

3. RESPONSIBILITIES 4

4. PRE-CONDITIONS 5
4.1 PERSONNEL 5
4.2 APPLICABLE CLEANLINESS CONDITIONS 5
4.3 APPLICABLE ENVIRONMENTAL CONDITIONS 5
4.4 TOOLS AND EQUIPMENT 6
4.5 MATERIAL AND HARDWARE 6

5. CLEANING 7
5.1 SAFETY CONSIDERATIONS 7
5.2 CLEANING PROCESSES 7
5.2.1 Cleaning of Thermal Blankets and Foils 7
5.2.1.1 Cleaning with Cleaning Solvent 7
5.2.1.2 Cleaning with GN_2 8
5.2.2 Cleaning of Bonding Leads 8
5.2.3 Cleaning of Small Parts 8
5.3 INSPECTION AND DOCUMENTATION 8

6. REPAIR 9
6.1 REPAIR CRITERIA 9
6.2 REPLACEMENT CRITERIA 9
6.3 DETAILED REPAIR METHODS 10
6.3.1 Tears in Blankets 10
6.3.2 Holes in Blankets 10
6.3.3 Repair tapes 10
6.3.4 Contamination of Blanket 10
6.3.5 Attachment Replacement 11
6.3.5.1 Clip Washers 11
6.3.5.2 Velcros 11
6.3.6 Electrical Bonding 11
6.3.6.1 Repair of Bonding Lead 11
6.3.6.2 Repair of Grounding Points 12

6.4 DOCUMENTATION 12

7. INTEGRATION OF ATTACHMENTS 13

7.1 SPECIAL PRE-CONDITIONS 13

7.2 BONDING OF STAND-OFFS 13
7.2.1 Position Marking 13
7.2.2 Preparation of Stand-Offs 13
7.2.3 Substrate Preparation 14
7.2.4 Adhesive Mixture 14
7.2.5 Application of adhesive and stand-off 14
7.2.6 Fixation for Curing 14

7.3 BONDING OF VELCROS 15
7.3.1 Preparation of Velcros 15
7.3.2 Position Marking & Masking 15
7.3.3 Substrate Preparation 15
7.3.4 Adhesive Mixture 15
7.3.5 Application of adhesive and Velcro 15

8. INTEGRATION OF BLANKETS 16

8.1 GENERAL INSTRUCTIONS 16
8.1.1 Pre-Conditions 16
8.1.2 Preparation of Working Surfaces 16
8.1.3 Blanket Identification 16
8.1.4 Marking of Stand-Off Holes on the Blanket 17
8.1.5 Installation of Structural Bonding Lead Parts 17
8.1.6 Punching of Stand-Off Holes into the Blankets/Foils 17
8.1.7 Attachment of Clip Washers 18
8.1.8 Attachment of Blankets and Foils to the Structure 19
8.1.8.1 Opening of Velcros 19
8.1.9 Overlapping Rules 20
8.1.10 Closure of Blanket Overlaps 21
8.1.11 Connection of Bonding Leads 22
8.1.12 Open Work 23
8.1.13 Documentation 23

8.2 SPECIFIC INSTRUCTIONS 24

ANNEX A: GENERAL ARRANGEMENT DRAWING (EXAMPLE) A.1

ANNEX B: BONDING INSTRUCTIONS B.1

ANNEX C: INTEGRATION SIGN-OFF SHEETS C.1

ANNEX D: OPEN WORK LIST D.1

ANNEX E: LIST OF HARDWARE TO BE INTEGRATED E.1

TABLE OF FIGURES

Figure 4-1: Hollow punch (typ.) 6
Figure 7-1 Fixation Tape for Stand-Off 14
Figure 8-1: Marking Tag 16
Figure 8-2 Clip Washer Attachment 18
Figure 8-3 Opening of Velcros 19
Figure 8-4 Single Overlap 20
Figure 8-5 Overlapping at Corners 20
Figure 8-6: Closing of Blanket Overlaps using Tapes 21
Figure 8-7: Securing of bonding lead connections 22
Figure 8-8 Example for General Arrangement Drawing A.1

TABLE OF TABLES

Table 4-1 Environmental Conditions 5
Table 8-1 Form for Bonding Instructions B.1
Table 8-2: Form for Adhesive Mixture Record B.2
Table 8-3: Form for Integration Sign-off Sheet C.1
Table 8-4: Form for Open Work Definition D.1

1. INTRODUCTION

1.1 SCOPE

The scope of this document is to provide all necessary information needed for proper integration of MLI thermal blankets, foils and related small parts, which are to be manufactured, procured and delivered by AAE.

This procedure is applicable for all generic aspects of cleaning, repair and integration of MLI thermal blankets, foils and related small parts.

The relevant instructions for proper handling, packing and transport are described in AD1.

Instructions specific to a certain application/project will be provided separately in the relevant sections of the delivery documents using the forms defined in the annexes of this generic document.

1.2 THERMAL BLANKETS

The thermal blankets and foils are a very delicate hardware, have been manufactured to very high quality standards and represent a considerable value. Therefore these items must be treated with utmost care and packed when not in use.

During the processes described in this procedure attention must be paid to avoid the damages listed below:

- contamination (both particular and molecular)
- scratches on the surfaces/coatings
- mechanical damages in the foils/groundings

As the integration is performed in two major steps, the respective chapter is split up in two main parts.

- the first part describes the installation of attachments and bonding leads to the structure
- the second part describes the integration of the AAE MLI blankets to the structure

This document is property of AUSTRIAN AEROSPACE Ges m.b.H

1.3 ACRONYMS

AAE . Austrian Aerospace GmbH
A/R .. as required
acc. .. according
AIV .. Assembly, Integration, Verification
CSL .. Configuration Status List
CFRP ... Carbon Fiber Reinforced Plastic
C/W ... Clip Washer
DC .. Direct Current
DIL .. Deliverable Items List
EOL ... End of Life
e.g. ... for example
etc. ... and so on
Fig. ... Figure
GN_2 .. Gaseous Nitrogen
HP .. Hewlett Packard
ICD ... Interface Control Document/Drawing
i.e. ... this is
IPA .. Isopropanol
K .. Kelvin
LN_2 ... Liquid Nitrogen
mil .. 0.001 inches
MLI ... Multi Layer Insulation
NA .. not applicable
NCR ... Non-Conformance Report
NVR ... Non Volatile Residue
NRB ... Non-Conformance Review Board
PA .. Product Assurance
p.a. .. pro analyse
para ... Paragraph
ppm .. Parts Per Million
PSA ... Pressure Sensitive Adhesive
QA ... Quality Assurance
RD ... Reference Document
ref ... reference
RH ... Relative Humidity
SGP ... Stuctural Grounding Point
S/O ... Stand-Off
TBC ... To be confirmed
TBD ... To be determined
TH ... Thermal Hardware
typ. ... typical
US ... Ultrasonic
UV ... Ultra Violet
VDA . . Vacuum Deposited Aluminium

2. DOCUMENTS

The following documents form part of this document to the extent specified here-in

In the event of a conflict between this document and the Applicable Documents (AD), the AD shall have the precedence. In the event of a conflict between this document and a Reference Document (RD), this document shall have precedence.

All documents referenced hereafter as ADs and RDs are valid in their latest issue.

2.1 APPLICABLE DOCUMENTS

AD1	QSTD-QPRC-3031-AAE	Handling Procedure for Thermal Hardware
AD2	-	Cleanroom Regulation for the applicable Integration Facility

2.2 REFERENCE DOCUMENTS

RD1	EPOS	Process management system of AAE with all process documents integrated
RD2	QSTD-MPRC-3033-AAE	Vorschrift zur Superisolationsfertigung; Manufacturing Procedure for MLI (AAE internal procedure)
RD3	QSTD-MPRC-3014-AAE	Reinigung in der Hi-Rel Fertigung; Cleaning of parts (AAE internal procedure)
RD4	QSTD-QLST-4013-AAE	Checklist for Inspection of Thermal Hardware Blankets (AAE internal procedure)
RD5	QSTD-QPRC-2009-AAE	Non Conformance Reporting System (AAE internal procedure)
RD6	FED-STD-209E	Cleanroom and Work Station Requirements, Controlled Environment
RD7	ECSS Q-70-26A	Crimping of high-reliability electrical connections

This document is property of AUSTRIAN AEROSPACE Ges.m.b H

3. RESPONSIBILITIES

The following responsibilities are defined (in accordance with AAE Integrated Management System - RD1):

Note: Below responsibilities only apply if AAE personnel is performing the integration. In case that customer personnel performs the integration the customer responsibility rules shall apply.

*Design **[B30]** – Thermal Hardware System Ingenieur*

- Definition of detailed integration instructions (see forms/examples in ANNEX A:)
- Definition of bonding instructions (see forms/examples in ANNEX B:)
- Definition of integration sign-off sheets (see forms/examples in ANNEX C:)
- Definition of any open work tasks (see forms/examples in ANNEX D:)
- Definition of hardware to be integrated (see forms/examples in ANNEX E:)

*Manufacturing **[B40]** – Operator for Thermal Hardware*

- Check for completeness & compilation of all hardware (acc. engineering) to be integrated
- Handling of hardware according applicable procedures
- Performing the integration of the thermal hardware attachments in accordance with this and other applicable procedures
- Performing the integration of the thermal hardware blankets & foils in accordance with this and other applicable procedures
- Generation of NCRs, if any
- Performing repair of the thermal hardware blankets & foils in accordance with this and other applicable procedures, if necessary
- Dokumentation of the performed integration by filling in the applicable sign-off sheets
- Dokumentation of any deviations from this procedure and accompanying definitions

This document is property of AUSTRIAN AEROSPACE Ges.m.b.H

4. PRE-CONDITIONS

The following Pre-Conditions apply for all operations with Thermal Hardware. Therefore they are listed prior to the description of the actual procedures

4.1 PERSONNEL

The work described in this document shall only be performed by experienced personnel or at least under supervision of experienced personnel. The cleanroom procedures of the relevant cleanroom must be followed and the use of clean gloves as described in para. 4.4 is mandatory.

4.2 APPLICABLE CLEANLINESS CONDITIONS

All operations have to be carried out in a cleanroom with at least class 8 acc. EN ISO 14644-1 (comparable to class 100.000 of RD6)

4.3 APPLICABLE ENVIRONMENTAL CONDITIONS

For short term laying down blankets / foils which are not in use, sufficient horizontal areas (i.e. tables, boards, shelves etc.) shall be provided. In order to avoid scratches on external surfaces, those tables shall be covered by clean, clear Mylar foils or equivalent.

	required
Temperature:	22° C ± 3° C
Relative Humidity:	40 % ÷ 60 %

Table 4-1: Environmental Conditions

4.4 TOOLS AND EQUIPMENT

- Adhesive bonding Tools
- Disposable wipers or lint-free cloth: M-WipeTX502 or similar (organic contaminant content < 25 ppm)
- Isopropyl-alcohol or Acetone cleaning fluid: 'pro-analyse' quality or NVR < 2 ppm
- Cleanroom clothing (contaminated clothing is to be removed & laundered before re-use)
- Protective goggles
- Gloves: only clean lint-free gloves are allowed. Latex gloves are used during manufacture and their use is recommended. Use of gloves is however mandatory. Contaminated gloves must be replaced by new ones.
- Metal box (or other material not affected by adhesive mixture)
- Spatula for mixing and application of adhesive
- Tables in sufficient number and sizes with approved working surfaces
- Cleanroom approved marker pen
- Abrading equipment: Sandpaper 120, 360 or Scotchbrite
- Vacuum cleaner
- Hollow punch as shown in Figure 4-1; ∅ TBD mm (A/R).
- Dry filtered GN_2 (0,3 µm filtered; technically clean)

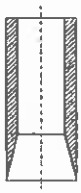

Figure 4-1: Hollow punch (typ.)

4.5 MATERIAL AND HARDWARE

- Structural adhesive systems according bonding instructions (see ANNEX B:)
- AAE delivered MLI blankets
- PSA Tapes (9460, 966, 9703) as needed according detailed instructions
- Other Tapes as needed according detailed instructions
- 1 mil Clear Clean Mylar
- Polyethylene (outer packing)
- Dessicant with humidity indication: DIN 55473
- Flashbreaker Tape or equivalent non-residual tape
- Structure samples for adhesive bonding samples

This document is property of AUSTRIAN AEROSPACE Ges.m.b.H.

5. CLEANING

5.1 SAFETY CONSIDERATIONS

When using Isopropanol or Acetone as cleaning agent, it is essential that personnel follow the safety requirements of the suppliers safety data sheets exactly. Protective equipment (e.g clothing, gloves etc.) must be used.

5.2 CLEANING PROCESSES

The cleaning of the delicate hardware has to be performed with utmost care. The relevant handling procedure (AD1) has to be followed.

Cleaning shall only take place in an environment as specified in para. 4.2.

Cleaning shall not degrade thermo-optical properties of the hardware and shall not cause scratches on the surface.

5.2.1 Cleaning of Thermal Blankets and Foils

5.2.1.1 Cleaning with Cleaning Solvent

Isopropanol as specified in para. 4.4 shall be used as cleaning solvent for cleaning of thermal blankets and foils.

Note: Isopropanol must not be diluted with any other liquid.

Cleaning of blankets/foils shall be done with use of a disposable wiper or lint-free cloth (as specified in para. 4.4) which is to be soaked and rinsed in Isopropanol prior to use.

Organic contaminants shall be removed by lightly touching the blanket/foil with firstly a soaked wiper and secondly a dry wiper. Care should be taken, that during the cleaning process no solvent excessively comes into the perforation holes of the foils.

Note: Do not wipe contaminated area with excessive force, because this could cause scratches on the surface.

The blanket/foil shall be allowed to stand for approx. 5 minutes to ensure full evaporation of the remaining solvent, before being re-used.

5.2.1.2 Cleaning with GN_2

Finished blankets shall be checked for particulate contamination

If seen necessary, particles shall be removed by means of a jet of compressed GN_2 and/or careful vacuuming.

Note: Cleaning with jet of GN_2 must be employed with utmost care.

The following pre-cautions have to be taken, if this cleaning method is selected:

- no unprotected blankets or other contamination sensitive hardware shall be located in the vicinity of the blanket to be cleaned, since contamination of these items may result
- only the outer surface shall be blasted with GN_2; care shall be taken to avoid that the jet of compressed GN_2 effects the internal layers of the blanket
- avoid scratching of surface by dust during cleaning
- clean hardware only in one direction to avoid re-contamination of blanket

5.2.2 Cleaning of Bonding Leads

If bonding leads are contaminated, wipe them thoroughly with a disposable wiper soaked in Isopropanol.

Note: As bonding leads of blankets often run near a perforated inner foil, care should be taken that no solvent excessively *comes into the perforation holes of the foil.*

Care should also be taken, that during the cleaning process no damage of the connection to the blanket itself occurs.

5.2.3 Cleaning of Small Parts

Stand-offs, clip washers, grounding washers etc. have been cleaned before their delivery. If contamination occurs, a replacement shall be considered, as spare parts are available in most cases.

If cleaning of such parts is decided, these parts shall be cleaned by means of an ultrasonic cleaning bath (e.g. according to RD3 or similar procedure). This process has to be performed in a safe distance to blankets, foils, etc.

5.3 INSPECTION AND DOCUMENTATION

After performing cleaning, a visual inspection has to be performed to verify that visibly clean condition of the hardware has been achieved.

After delivery each cleaning process has to be recorded in the relevant Historical Record of the Blanket/Foil.

6. REPAIR

This chapter describes the necessary steps to be undertaken for repair in case of damaged thermal hardware. Information/criteria applicable for repair of MLI blankets in general as well as additional information for detailed repair methods are provided.

6.1 REPAIR CRITERIA

The following criteria are applicable for repair of MLI blankets:

- Whenever a damaged layer of a blanket/foil or a referred part (e.g. attachment provisions, electrical bonding provisions etc.) has to be repaired then only repair material shall be used, which consists of a material similar to that of the material being repaired.

Note: Kapton tape (with or without coating pending damaged layer characteristics) can always be used for repair of a damaged layer (i.e. Kapton and Mylar foils).

Never use Mylar foils for repair of Kapton foils!!!

- Kapton tape used for repair shall always be attached on non-space side if possible.

6.2 REPLACEMENT CRITERIA

In order to enable decision if a blanket can still be repaired or has be to be re-manufactured, several criteria have to be taken into account.

In case of the following a blanket shall be re-manufactured

- Tears in a damaged outer layer exceed length of 150 mm.
- Holes in a damaged layer exceed Ø20 mm.
- Total area of repair material exceeds 10 % of total blanket area.
- One or more layers are damaged in such a way, that the required mechanical/thermal/electrical properties cannot be reached, and the respective layers cannot be replaced.
- Contamination level of blanket is that high, that required thermal/electrical properties cannot be reached and local repair or cleaning is impossible.
- Grounding point repair of grounding point is impossible.

Note: Criteria listed above shall be understood as guideline for replacement of blanket/foil.

In general re-manufacturing is needed in all cases where unacceptable mechanical/thermal degradation can be expected or is possibly to be expected even after (mechanical) repair.

Final decision has always to be made via NRB.

This document is property of AUSTRIAN AEROSPACE Ges.m.b H

6.3 DETAILED REPAIR METHODS

In addition to the general procedures described above, this para. contains information about possible repair methods for damaged blankets, or referred parts.

6.3.1 Tears in Blankets

Tears in blanket/foil are repaired as follows:

- Punch crackstopper hole (Ø3 mm) at end of tear.
- Clean application area of repair tape using Isopropyl-alcohol, if necessary (i.e. when area contaminated in a way that good adhesion of tape cannot be guaranteed).
- Close tear with repair tape.

Note: Overlap at end of tear shall be ≥ 10 mm.

Repair tape only needed on one side (non-space side, if possible).

- If a tear reaches a stand-off hole, the stand-off hole has to be reinforced with a ring of repair tape (in order to avoid punching of new stand-off hole).

6.3.2 Holes in Blankets

Repair method shall be the same as described in para. 6.3.1 for the repair of tears.

Note: If hole exceeds Ø10 mm, it has to be repaired on both sides of the foil!

6.3.3 Repair tapes

The following rules are applicable for the type of repair tape to be used.

Repaired foil	Repair tape to be used	Remark
foils of the inner package (thin Mylar or Kapton foils)	1 mil plain Kapton with PSA	
Outer layer (visible layer)	outer layer material with PSA	orientation of coatings (VDA, etc.) shall be the same as of the repaired foil.

6.3.4 Contamination of Blanket

If a blanket/foil is contaminated, try to clean respective area as described in para.5.2.1.1 using Isopropyl-alcohol

This document is property of AUSTRIAN AEROSPACE Ges.m.b.H.

6.3.5 Attachment Replacement

Attachments (Stand-offs, Clipwashers and Velcros) have to be replaced, if they are destroyed or damaged in a way that their mechanical performance cannot be guaranteed anymore

6.3.5.1 Clip Washers

If the number of clip washer mounting/dismounting cycles exceeds 20, clip washers need to be re-inspected for proper performance in order to support the decision for further use.

In case that it cannot be ensured that the clipwashers mounting/dismounting cycles have not exceeded 20 cycles, at least a visual inspection on random samples is mandatory prior to launch/test.

6.3.5.2 Velcros

If the number of velcro mounting/dismounting cycles exceeds 10, velcros need to be re-inspected for proper performance in order to support the decision for further use.

In case that it cannot be ensured that the velcro mounting/dismounting cycles have not exceeded 10 cycles, at least a visual inspection on random samples is mandatory prior to launch/test.

Velcros have to be replaced according to following repair method:

- Cut sewing yarn with scissor
- Remove Velcro
- Apply new velcro by using the same type and application procedure according to RD2.

6.3.6 Electrical Bonding

6.3.6.1 Repair of Bonding Lead

If the bonding lead is damaged between the blanket/foil grounding point and the stress relief tape, a new grounding point has to be applied according to procedures described in the following para.

In any other case the bonding lead has to be cut off at the damaged location and a new connector/shrink sleeve has to be applied. The connector shall be crimped in accordance with RD7.

6.3.6.2 Repair of Grounding Points

Whenever a grounding point is damaged (i.e. damage of crimped connection between bonding lead and grounding point), a new grounding point has to be applied on the blanket.

If an additional grounding point has to be applied on a blanket, the following procedure has to be observed:

- Cut off bonding lead of damaged grounding point as close as possible to stress relief tape.
- Open tongues of outermost layer at new grounding point location to the minimum extent necessary for placing grounding washers.
- Open inner package of MLI
- Apply additional grounding point according RD2.
- Close tongues of outermost layer around grounding point.

Note. *For blankets carrying a betacloth outermost layer it has to be observed, that one of the grounding washers touches a graphite yarn of the betacloth*

Note: *Functional requirements of the new grounding point have to be measured and recorded in the relevant historical record – the measurement to be conducted shall be a pin-to-pin resistance measurement between different grounding leads of the same blanket. Acceptance of exceeding shall be decided on case by case basis via NCR. The requirement can be found in the blanket inspection sheets in the relevant delivery documentation.*

6.4 DOCUMENTATION

Each repair performed has to be covered by an NCR.

Each repair has to be recorded in the relevant Historical Record of the blanket with reference to the respective NCR. The amount of repair (e.g. length, % of total blanket area, etc.) has to be noted.

New mass of repaired blanket has to be recorded in the relevant inspection record of the blanket (i.e. column "Mass" respectively column "Remarks").

Historical Record of blanket shall support the decision, if a blanket can still be repaired or if it has to be re-manufactured (e.g. total amount of linear repair etc.).

7. INTEGRATION OF ATTACHMENTS

This part of the document describes how the MLI attachments (i.e. stand-offs, attachment supports, velcros) have to be installed to the structure.

7.1 SPECIAL PRE-CONDITIONS

Sufficient working space shall be made available to the working personnel. Where cleaning fluids are used, proper ventilation shall be ensured and water sources shall be within easy reach.

Note. As described above, proper cleanroom clothing and approved gloves must be worn during the following steps of this process.

7.2 BONDING OF STAND-OFFS

Note: As there will most probably exist several types of stand-offs, a strict routine is necessary to avoid adhesion of a stand-off to an incorrect position

To bond the stand-offs to the structure repeat the following paragraphs for all Stand-Offs.

Note: For each batch of adhesive a bonding sample with stand-offs and a relevant structure sample is necessary. The samples and the remaining adhesive mixture shall be kept for traceability reasons.

7.2.1 Position Marking

The positions where stand-offs shall be adhered to must be marked on the structure. This is performed using an approved pen or very light abrading at the positions according to applicable drawings. Then the Stand-Offs can be bonded to these marked positions.

7.2.2 Preparation of Stand-Offs

Note: Open packages in the presence of QA personnel!

Open the package containing the stand-off type which is due for bonding. If supplied by AAE, Stand-offs have been cleaned prior to packing into the plastic bags according to RD3.

However, if cleaning is necessary due to any event proceed according to RD3 or equivalent.

If not already delivered in abraded conditions all Stand-Off flanges (bonding areas) have to be abraded with sandpaper as per para. 4.4 or equivalent.

Note: A vacuum cleaner must be used, if abrading is performed in a clean area

7.2.3 Substrate Preparation

Depending on the substrate, to which the stand-offs have to be bonded to, different procedures may be applicable. Roughening and subsequent cleaning has to be performed according to the relevant bonding instructions – see ANNEX B:

7.2.4 Adhesive Mixture

Depending on the adhesive to be used different mixture ratios, pot lifes and curing times have to be observed. These parameters are defined in dedicated adhesive mixture records using the forms as described in ANNEX B: For each batch of adhesive a separate adhesive mixture record has to be filled.

7.2.5 Application of adhesive and stand-off

Depending on the adhesive to be used different bonding procedures have to be used. The applicable procedures are defined via the relevant bonding instructions – see ANNEX B:

7.2.6 Fixation for Curing

Fix the stand-off with one or two pieces of flashbreaker tape or an equivalent non-residual tape as per Figure 7-1 over the foot.

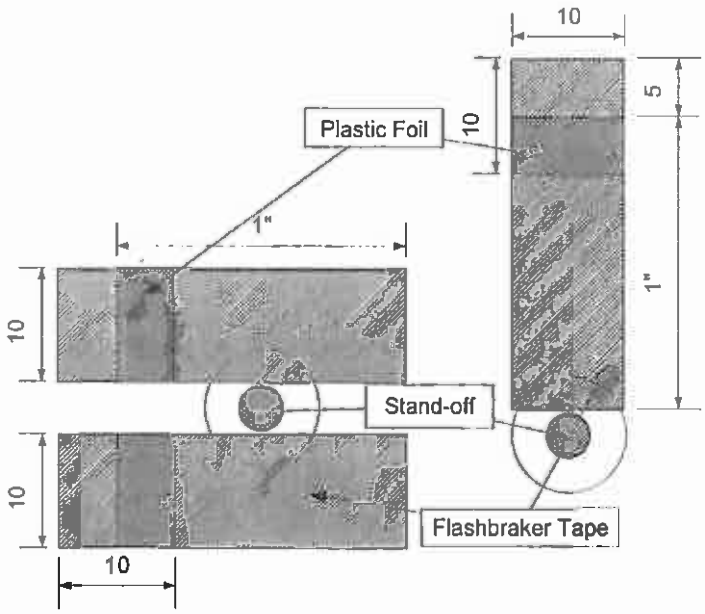

Figure 7-1: Fixation Tape for Stand-Off

7.3 BONDING OF VELCROS

Note: Each velcro attachment element consists of a loop part, which is already attached to the MLI blanket, and a hook part, which is to be bonded to the structure.

To bond the velcros to the structure repeat the following paragraphs for all velcros

Note: For each batch of adhesive a bonding sample with a velcro and a relevant structure sample is necessary. The samples shall be kept for traceability reasons.

7.3.1 Preparation of Velcros

Open the package containing the velcro hook tapes with the proper length.

The bonding area of each velcro hook part shall be cleaned with IPA, using a disposable wiper.

Note: Prior to performing any bonding activity at least 10 minutes shall be waited to allow for evaporation of cleaning agent.

7.3.2 Position Marking & Masking

The positions where velcros shall be adhered to must be marked on the structure. This is performed using an approved pen or very light abrading at the positions according to applicable drawings. Then the Velcros can be bonded to these marked positions.

Those areas, where no adhesive is planned to be applied, shall be covered by flashbreaker tape or an equivalent non-residual tape.

7.3.3 Substrate Preparation

Depending on the substrate, to which the stand-offs have to be bonded to, different procedures may be applicable. Roughening and subsequent cleaning has to be performed according to the relevant bonding instructions – see ANNEX B:

7.3.4 Adhesive Mixture

Depending on the adhesive to be used different mixture ratios, pot lifes and curing times have to be observed. These parameters are defined in dedicated adhesive mixture records using the forms as described in ANNEX B: . For each batch of adhesive a separate adhesive mixture record has to be filled.

7.3.5 Application of adhesive and Velcro

Depending on the adhesive to be used different bonding procedures have to be used. The applicable procedures are defined via the relevant bonding instructions – see ANNEX B:

8. INTEGRATION OF BLANKETS

8.1 GENERAL INSTRUCTIONS

8.1.1 Pre-Conditions

A sufficient number of tables shall be available, such that all blankets can be laid out without undue deformation. These tables shall have a Teflon working surface or any other approved working surface Clear clean Mylar shall be made readily available for covering of unpacked blankets. Any possible contamination source must be removed as far as particulate contamination as well as molecular contamination are concerned.

8.1.2 Preparation of Working Surfaces

The tables on the working surfaces shall be visible clean. If necessary they shall be pre-cleaned using Isopropyl-alcohol cleaning fluid. Working surfaces shall not be severely scratched nor shall any part protrude out of the flat surface to avoid blanket damage.

8.1.3 Blanket Identification

Each blanket carries its unique identification tag (Size: 38 mm x 24 mm). This tag is located on the backside of the blanket and looks as shown in the next figure:

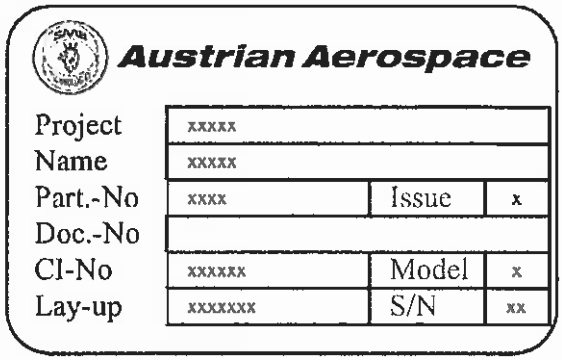

Figure 8-1: Marking Tag

8.1.4 Marking of Stand-Off Holes on the Blanket

As the S/O's are mounted to the structure with tolerances and the blankets have to be adapted slightly to the actual shape of the structure, the S/O holes are not punched during manufacturing but during integration. The positions of the holes for the S/Os are marked up on each template corresponding to a blanket (i.e. carrying the same Part Number).

Note: The template must be legible if put on the spacecraft (i.e. not mirrored).

To obtain correct S/O positions on the template, attach the template to the spacecraft by hand at its intended location. If necessary shape the template to assume the optimum contour over the spacecraft and cross-check the marked-up S/O holes with the actual S/O positions If necessary mark up the actual positions with the cleanroom approved pen.

8.1.5 Installation of Structural Bonding Lead Parts

One Bonding Lead consists of two parts which are interconnected by means of a pin/socket connection. One part of this Bonding Lead is riveted to the blanket and the other part is connected to the structural bonding points.

The installation shall be done as follows:

- Locate the Structural Bonding Point referenced to in the applicable Integration Sign-off sheets (see example in ANNEX C:); the locations of these bonding points on the structure are provided in the applicable ICD.
- Attach the structural bonding lead parts to their corresponding Bonding Point.
- Torque bolt with 0,8 Nm + running torque.
- If the Structural Bonding Point does not provide a self-locking thread then fix the Screw head/Nut by a point of adhesive (e.g. EC2216 or appropriate) to the structure.
- Fix the routing with patches of plain Kapton tape (1 inch x 1 inch), taking care, that this routing does not cross over detachable parts of the structure.

The structural reference for each blanket bonding point is given in the applicable Integration Sign-off sheets (see example in ANNEX C:)

8.1.6 Punching of Stand-Off Holes into the Blankets/Foils

Put the relevant template onto a clean table. Punch the marked holes into the template by using a hollow punch, which is 1 mm larger in diameter than the S/O shaft. Attach the template to the Spacecraft again and verify, that the holes match the S/Os.

Repeat para. 8.1.4 if necessary to obtain correct template fit.

When template fits to the Spacecraft/Instrument, unpack the blanket bearing the same Part Number as the template (compare Part Number on Marking Tag with number on template) and put it onto the working surface. Apply the template with the correctly punched S/O holes on the blanket and align with the most important geometrical shape (i.e. Cutout, Outer Envelope). Mark S/O positions with the cleanroom approved pen.

Note: Before punching the S/O holes, verify the proper condition of the hollow punch. The hollow punches' cutting edge must be without any cracks or burrs. For an optimum punching result the punch must be sharpened frequently and several spare tools should be available.

Punch the S/O holes using a hollow punch, which is 1 mm larger in diameter than the S/O shaft.

8.1.7 Attachment of Clip Washers

The Clip Washers must be applied very carefully to avoid undue force on the S/O's. Clip-Washers shall be applied as shown in the following figure:

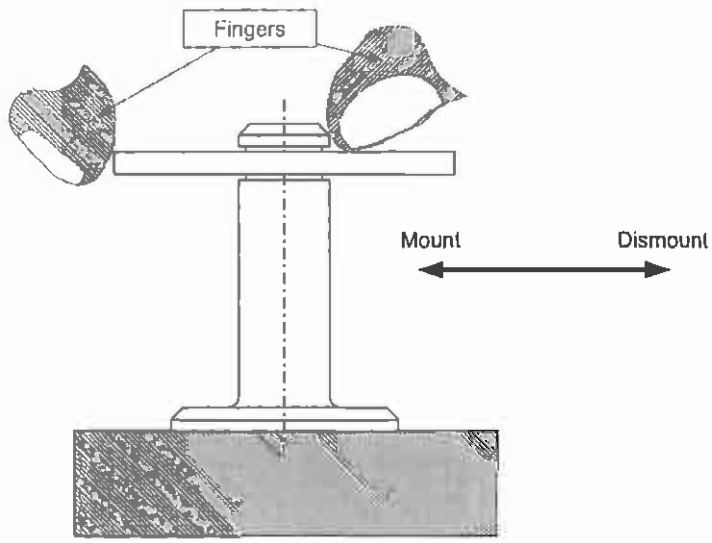

Figure 8-2: Clip Washer Attachment

All Clip Washers shall be applied such, that the Blankets nicely fit to the structure – i.e. the blankets shall neither be compressed nor have a gap to the structure larger than necessary.

8.1.8 Attachment of Blankets and Foils to the Structure

The attachment of the blankets to the structure is a very delicate process und should therefore be performed by experienced personnel (or at least under supervision of experienced personnel) and very carefully.

Apply a blanket to the structure and adjust to its contour where necessary. Apply Clip-Washer as described in para. 8.1.7 above. If clearance between thermal blankets/foils and the structure is required, Clip-Washers can be attached on the S/Os underneath the blankets (Some S/Os have several grooves) to hold the blankets in position

Removal of a Blanket is the reverse procedure.

Note: Before removal of a blanket verify,

- *that all overlaps are free*
- *all Clip-Washers have been removed*
- *all bonding leads have been disconnected*
- *all layers of the blanket have been detached from the stand-offs*

so to avoid damage of the blanket. This process could require the removal of another blanket first before removing the intended blanket.

8.1.8.1 Opening of Velcros

When opening blanket overlaps, which are closed by means of velcros, the following procedure has to be strictly followed in order to avoid any damage on the interfacing blankets (see Figure 8-3):

⇨ grap the first part of the velcro connection (either hook or loop part)

⇨ press down the opposite part of the velcro connection and peel the connection apart carefully.

⇨ **ATTENTION**: Never open the connection by pulling on either part of the blanket, but always peel the parts apart by grapping both parts of the velcros!!

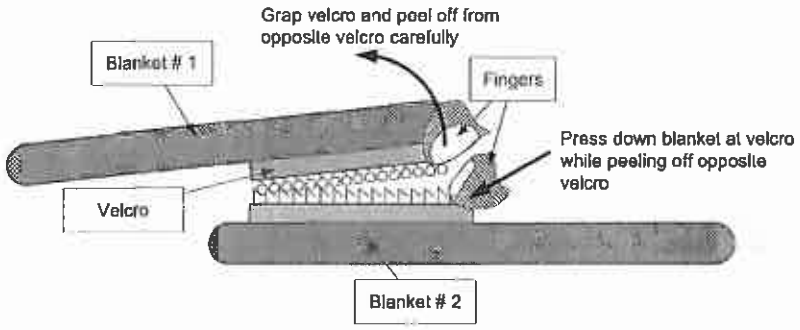

Figure 8-3: Opening of Velcros

8.1.9 Overlapping Rules

If not otherwise defined in and thus superseeded by the relevant project specific instructions, the following overlapping rules apply:

The standard overlap design is the "single" overlap as shown in Figure 8-4. Overlapping of 3 and more MLI has the same principle as overlapping with 2 MLI.

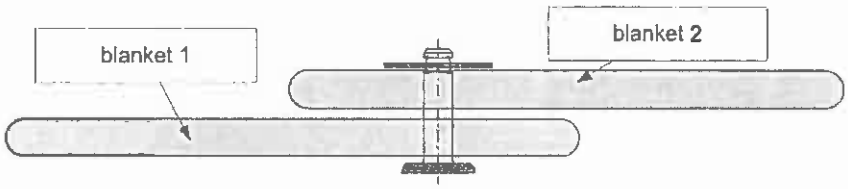

Figure 8-4: Single Overlap

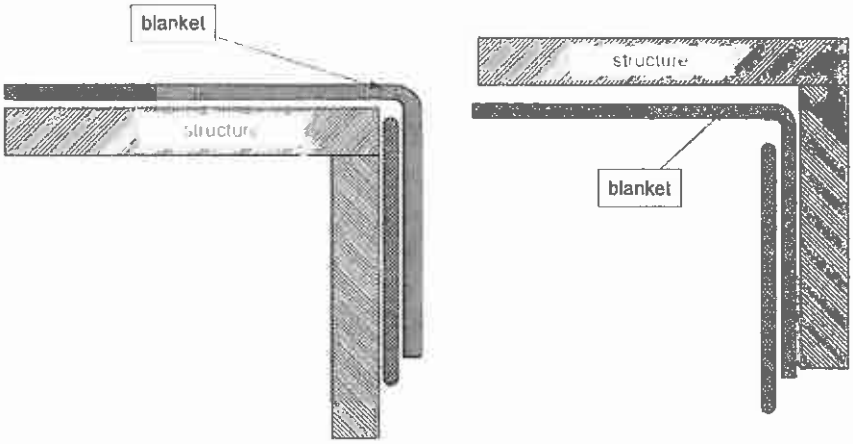

Figure 8-5: Overlapping at Corners

8.1.10 Closure of Blanket Overlaps

If seen necessary during final inspection, some blanket overlaps shall be partially closed to avoid additional thermal losses (see Figure 8-6).

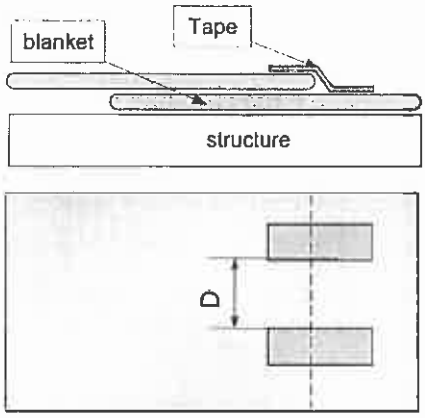

Figure 8-6: Closing of Blanket Overlaps using Tapes

Note: If no other distance "D" is specified for the individual case in the respective special instructions for each blanket, then this distance shall be 150 mm

The typical size of the tape is 50 x 25 mm.

The tape to be used shall be made of outer layer material except stated otherwise in the special instructions

This document is property of AUSTRIAN AEROSPACE Ges.m.b.H.

8.1.11 Connection of Bonding Leads

One Bonding Lead set consists of two pieces. One part is riveted to the blanket while the other part is attached to the respective structural bonding point.

After performing the tasks of para. 8.1.5 the structural parts of the bonding leads are ready for mating of blanket part/structural part of the bonding lead. After connection of all bonding leads of the MLI blanket, the electrical resistance between the rivet of one bonding point and its structural reference shall be measured and recorded.

Note: Before flight, this Pin/Socket connection must be secured against accidental demating with a piece of 1 mil plain Kapton 966 or 9460 PSA tape, wound around the connector (see Figure 8-7*).*

Securing of connectors with 1mil Kapton / PSA Tape (25,4 x 25,4 mm):

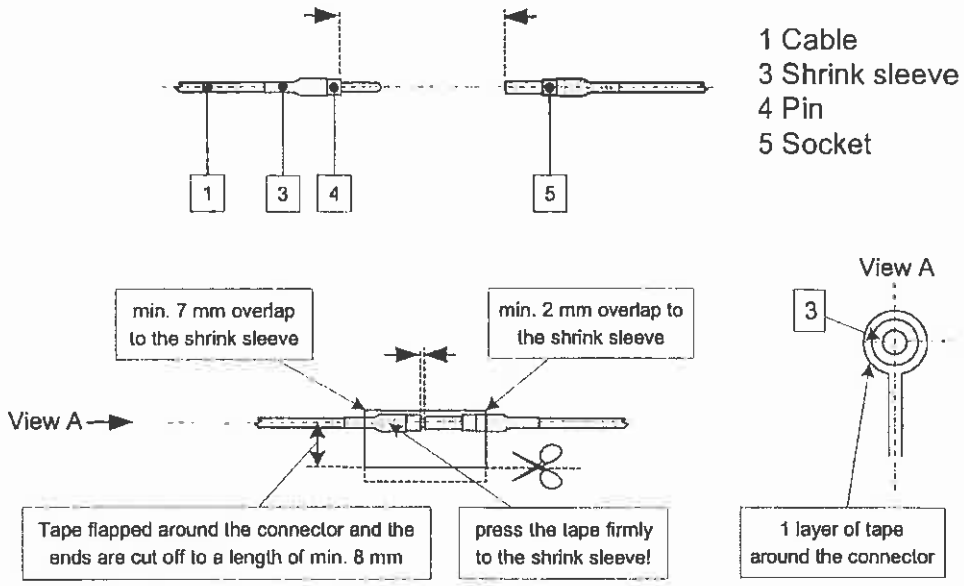

Figure 8-7: Securing of bonding lead connections

8.1 12 Open Work

A number of cut-outs, slits etc. might have to be made during integration (this is stated as "open work" in the relevant delivery documents respectively in the detailed instructions).

The general proceeding is as described in para. 8 above (i.e. taking the relevant contours, slits etc. onto the template and then introducing them into the blanket/foil).

Note: All information given in para. 8.2 have to be taken into account.

This work is to be performed by AAE personnel or at least in presence of an AAE representative to ensure that the same manufacturing standards/methods are applied that were used during the production of this hardware.

8.1.13 Documentation

As the stand-off locations on the templates are only indicating the approximate position, the actual position has only to be clearly marked on the reduced size template copies when it is more than 10 mm away from its nominal position.

The final stand-off position has always to be marked on the template used for on-site modification of the blanket (see para. 8.1.6)

All other modifications of the hardware (slits, cut-outs, tapes etc.) must be clearly marked on the production templates provided together with the blankets as well as on the reduced size copies of the templates, which are provided with the applicable delivery documents.

All hardware items modified during integration (e.g. by making cut-outs, finishing bonding leads etc.) shall be weighed. The new weight shall be recorded in the relevant inspection record of the blanket (i.e. column "Mass" respectively column "Remarks").

For each MLI blanket / foil the electrical resistance between the rivet of one bonding point and its structural reference shall be checked/measured for compliance to the applicable requirement and recorded in the applicable Integration Sign-off sheets (see example in ANNEX C:)

Each mounting/removal of an MLI blanket has to be documented in the „Historical Record" sheet of the relevant delivery documents.

This document is property of AUSTRIAN AEROSPACE Ges m.b.H

8.2 SPECIFIC INSTRUCTIONS

Any instructions, which are specific to a project will be provided in detailed instructions, which shall be considered as an amendment to this generic procedure and which are to be part of the delivery documentation.

These detailed instructions will include

1 Special instructions for integration, if any applicable to the project. These special instructions shall clearly identify and describe

- ⇨ Special integration sequence: any sequence of blanket mounting or dismounting to be especially observed during blanket integration
- ⇨ Special overlapping rules: any overlapping rules, which have to be especially considered and are not described either in para. 8.1.8.1 above or in the applicable General Arrangement drawings.
- ⇨ Special integration requirements: any measures which have to be especially considered.

2. Bonding instructions for attachment bonding (according ANNEX B:)
3. Any Open Work referring to para. 8.1.12 above (according ANNEX D:)
4. General Arrangement Drawing for the MLI blankets (example see ANNEX A:)
5. Blanket Integration Sign-off Sheets (according ANNEX C:)
6. List of hardware to be integrated (according ANNEX E:)

ANNEX A: GENERAL ARRANGEMENT DRAWING (EXAMPLE)

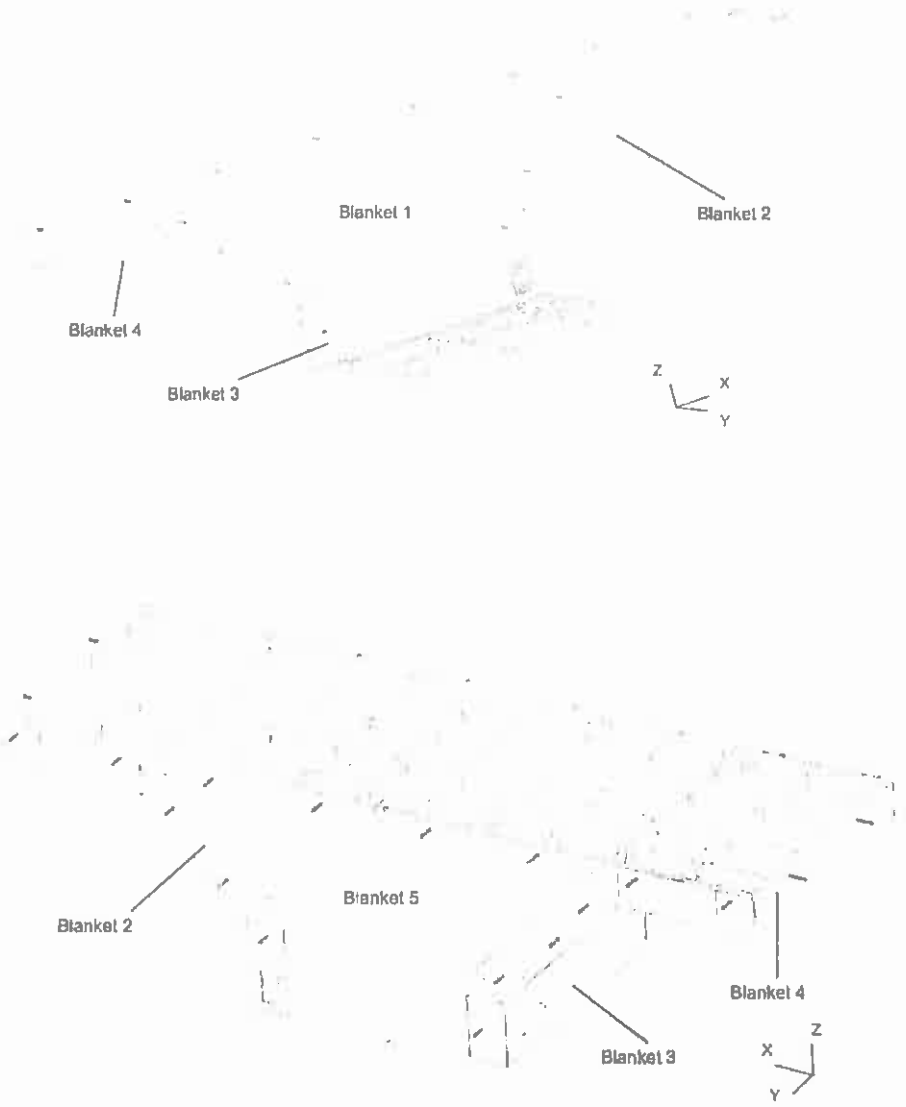

Figure 8-8: Example for General Arrangement Drawing

This document is property of AUSTRIAN AEROSPACE Ges.m.b.H.

ANNEX B: BONDING INSTRUCTIONS

Different adhesives and applicable procedures might be used for bonding of different types of attachments.

In case that AAE is responsible for the bonding of the attachments, the definition of the adhesives and the applicable procedures to be used has to be included in the applicable detailed instructions, which are contained in the relevant sections of the delivery documents.

The tables / forms as shown hereafter shall be used in the applicable detailed instructions.

ADHESIVE	FORESEEN USE	APPLICATION PROCEDURE
SUBSTRATE	**SUBSTRATE PREPARATION**	**SUBSTRATE CLEANING**

Table 8-1: Form for Bonding Instructions

ADHESIVE	FORESEEN USE	APPLICATION PROCEDURE
Scotchweld EC 2216 B/A	Bonding of Stand-offs	QSTD-MPRC-3008-AAE
SUBSTRATE	**SUBSTRATE PREPARATION**	**SUBSTRATE CLEANING**
CFRP	to be roughended by means of a glass-fibre pencil. *Note: In case of CFRP substrate the grinding must be performed carefully, not to damage the CFRP fibres. This abrasion shall only give a good bonding surface and is not intended to achieve any "electrical" contact.*	Clean the surface, where the Stand-off will be bonded to and and the foot of the Stand-off with Acetone and disposable cleaning paper a second time.
Aluminium	Aluminium substrates need not to be abraded if the surface treatment provides a proper bonding surface (to be checked on case-by-case basis).	same as for CFRP

Example

For each adhesive batch used an "Adhesive Mixture Record" as shown below has to be filled

ADHESIVE MIXTURE RECORD	No. (JJ / MM / DD / No.): / / /

Adhesive (Part A):		Color:	
Adhesive (Part B):		Color:	
Lot No. (Part A):			
Lot No. (Part B):			
AAE-Ref. (Part A): Colli:		; EoL	
AAE-Ref. (Part B): Colli:		; EoL	
Project-Code:	Reference Doc.:		
Mixture Ratio by Weight:	Part A : Part B =		
Used balance (type, S/N):		; next cal.:	
Part A:	**nominal:** g	**actual:**	g
	K = 1 / Mixture Ratio		
Part B:	**nominal:** (A_{act} x K =) g	**actual:**	g
Time / Start:		**Mixture Duration:**	**min.**
Temperature:	**° C**	**Humidity:**	**% r. H.**
Pot Life:		**Time of Last Bonding:**	
Minimum Cure Time at room-temperature:			
Cure-Time before Loading (Cure at 25° C):			
Bonding Samples:	according to:		
	Required: 1 **pcs.**	**actual:**	**pcs**
Samples marked with Record No. and Sample-Serial No.:		**performed by** _____	
Remarks:			

Location:	Date:	Performed by:	Checked by:

Table 8-2: Form for Adhesive Mixture Record

ADHESIVE MIXTURE RECORD	No. (JJ / MM / DD / No.): 05 / 03 / 08 / 01

Adhesive (Part A): *SCOTCH-WELD 2216 A*	Color: *grey*
Adhesive (Part B): *SCOTCH-WELD 2216 B*	Color: *white*
Lot No. (Part A): *16 99 65*	
Lot No (Part B): *16 99 65*	
AAE-Ref. (Part A): Colli: *2728*	; EoL: *19. 10. 06*
AAE-Ref. (Part B): Colli: *2728*	; EoL: *19. 10. 06*
Project-Code: *SMOS* Reference Doc.: *SO-UM-AAE-TCSH-0001*	
Mixture Ratio by Weight: Part A : Part B = *7 : 5*	
Used balance (type, S/N): *KERN CM 320-1*	; next cal.: *28. 09. 05*
Part A: **nominal:** *7* g	**actual:** *7,5* g
K = 1 / Mixture Ratio = *5 / 7* = *0,714*	
Part B: **nominal:** (A_{act} x K =) *5* g	**actual:** *5,4* g
Time / Start: *15:15*	**Mixture Duration:** *5* min.
Temperature: *22* ° C	**Humidity:** *RR* % r. H.
Pot Life: *max. 90 min.*	**Time of Last Bonding:** *15:40*
Minimum Cure Time at room-temperature: *8 h*	
Cure-Time before Loading (Cure at 25° C): *24 h*	
Bonding Samples: according to: **Required:** 1 pcs. **actual:** *1* pcs	
Samples marked with Record No. and Sample-Serial No.: **performed by** *KOK*	
Remarks:	

Location:	Date:	Performed	Checked
AAE	*08. 03. 05*	by: *KOK*	by: *KOK*

ANNEX C: INTEGRATION SIGN-OFF SHEETS

Several Integration steps have to be performed up to final integration of the blankets.

The general definition of the different steps of integration is applicable for all blankets and is therefore defined herein.

The definition of the blankets is project specific and has to be included in the applicable detailed instructions, which are contained in the relevant sections of the delivery documents.

The tables / forms as shown hereafter shall be used in the applicable detailed instructions.

ID	Blanket Name Blanket No. / Issue	S/N	INTEGRATION STEPS									REMARKS
-1	Name Number/Issue	SN	§1 Attachments	S/O	C/W	floating S/O						
			Mounting									
			§2 Bonding leads	SGP ID	routed	Structure S/N	Blanket S/N	length	Connect	Secure	Resist.	
			Blanket BP1									
			Blanket BP2									
			§3 Blanket	fit-check	modified	holes	initial	overlap prelim.	overlap final	open work		
			Integration									

Table 8-3: Form for Integration Sign-off Sheet

Each entry in the integration sign-off sheet is explained hereafter for better understanding. An example of an integration sign-off sheet is provided herafter as well.

§ 1 „Attachments Mounting"

"S/O"	to be signed-off, when all stand-offs have been properly mounted to their supports according to instructions in the integration procedure
"floating"	to be signed-off, when all floating Stand-offs for the respective blanket have been mounted
"C/W"	to be signed-off, when the respective blanket has been finally integrated and it has been checked, that all clipwashers are mounted

§ 2 „Bonding Leads"

"SGP ID"	when the structure-side bonding lead for the blanket has been properly mounted to the structural grounding point, the unique structural grounding point ID (according applicable ICD) has to be to be filled-in for each blanket bonding point separately.
"routed"	to be signed-off, when the bonding lead has been properly routed on the structure for connection with its counterpart on the blanket
"Structure S/N"	the serial number printed on the shrink sleeve at connector side of the bonding lead connected to the structural grounding point has to be recorded
"Blanket S/N"	the serial number printed on the shrink sleeve at connector side of the bonding lead mounted on the blanket has to be recorded
"length"	the length of the bonding lead used for mounting on structural grounding point has to be recorded
"Connect"	to be signed-off, when the bonding lead has been initially connected with its corresponding structural counterpart
"Secure"	to be signed-off, when the bonding lead has been finally connected with its corresponding structural counterpart and secured
"Resist. "	the electrical resistance between the rivet of the bonding point and its structural reference shall be checked/measured for compliance to the applicable requirement and recorded This can either be a "YES/NO" measurement, which is confirmed by a ✓ or a measurement value pending the requirement.

This document is property of AUSTRIAN AEROSPACE Ges.m.b.H.

§ 3 „Blanket Integration"

"fit-check"	to be signed-off, when the corresponding blanket template has been fit-checked and modified, if needed, for a proper fit of the respective blanket
"modified"	to be signed-off, when all modifications according the „open work" section, which are related to blanket modification, and all other necessary modifications for a proper fit of the respective blanket have been performed
"holes"	to be signed-off, when all holes for Stand-offs have been punched into the respective blanket
"initial"	to be signed-off, when the respective blanket has been initially integrated and found to fit properly
"overlap prelim."	For thermal or mechanical tests overlaps shall be closed as less as possible to fulfill its function, but to allow the removal of the Blanket without damage. To be signed-off, when when closure of overlaps has been performed acc. instructions in the detailed integration procedure for this purpose.
"overlap final"	For launch overlaps shall be closed as necessary to fulfill its function. After the final closure of the MLI Blankets, the removal (without damage) is very difficult. To be signed-off, when closure of overlaps has been performed acc. instructions in the detailed integration procedure
"open work"	to be signed-off, when all remaining open work according „open work" section, which is not related to blanket modification, (e.g. removal of protective layer) have been performed

The columns, which are left blank may be used for additional steps, which are seen necessary during integration.

The "REMARKS" column shall be used for any additional information considered necessary to be recorded (e.g. NCR number, etc.)

This document is property of AUSTRIAN AEROSPACE Ges.m.b.H.

ID	Blanket Name Blanket No. / issue	S/N	INTEGRATION STEPS									REMARKS
-1	Blanket Front G3990-301-001-00/B	01	§1 Attachments	S/O	C/W	floating S/O						
			Mounting	✓	✓	✓						
			§2 Bonding leads	SGP ID	routed	Structure S/N	Blanket S/N	length	Connect	Secure	Resist	
			Blanket BP1	SGP01	✓	1234	4568	800	✓	✓	0,20 Ω	
			Blanket BP2	SGP02	✓	2536	1254	900	✓	✓	0,15 Ω	
			§3 Blanket	fit-check	modified	holes	initial	overlap prelim.	overlap final	open work		
			Integration	✓	✓	✓	✓	✓	✓	✓		
-2	Blanket Skirt Right G3990-301-002-00/B	01	§1 Attachments	S/O	C/W	floating S/O						
			Mounting	✓		✓						
			§2 Bonding leads	SGP ID	routed	Structure S/N	Blanket S/N	length	Connect	Secure	Resist.	
			Blanket BP1	SGP02	✓	2358	7923	800	✓		✓	
			Blanket BP2	SGP03	✓	4789	1278	400	✓		✓	
			§3 Blanket	fit-check	modified	holes	initial	overlap prelim	overlap final	open work		
			Integration	✓	✓	✓	✓	✓				

Example

ANNEX D: OPEN WORK LIST

A number of cut-outs, slits etc. might have to be made during integration.

The definition of the open work tasks to be performed is project specific and has to be included in the applicable detailed instructions, which are contained in the relevant sections of the delivery documents.

The tables / forms as shown hereafter shall be used in the applicable detailed instructions.

Seq No.	Nomenclature	Drawing-/ Identification No.	Open		Reference Documents	Close-Out	
			Test	Work		Date	Sign
1							
2							

Table 8-4: Form for Open Work Definition

This document is property of AUSTRIAN AEROSPACE Ges.m.b.H.

Seq No.	Nomenclature	Drawing-/ Identification No.	Open Test	Open Work	Reference Documents	Close-Out Date	Close-Out Sign
1	Cut-outs for Feedhorn brackets to be adjusted after final adjustment of feedhorns.	G2820-400-000-11; S/N 03		x	SAR-AAE-MA-1001 iss. 2.0		
2	Protective Mylar cover to be removed prior to test	G2820-500-000-61, S/N 03		x	SAR-AAE-MA-1002 iss. 1.0		
3							
4							
5							
6							
7							
8							

example

This document is property of AUSTRIAN AEROSPACE Ges m b H.

ANNEX E: LIST OF HARDWARE TO BE INTEGRATED

The definition is project specific and has to be established for each individual project separately.

The tables / forms as shown hereafter shall be used for definition of the hardware.

The filled-in tables / forms have to be included in the applicable detailed instructions, which are contained in the relevant sections of the delivery documents.

An example of such a definition / listing is provided herafter as well.

Blankets/Foils

pcs.	*Description*	*Part No.*	*S/N*	*Remarks*

Attachment Hardware

pcs.	*Description*	*Part No.*	*Remarks*

Grounding Hardware

pcs.	*Description*	*Part No.*	*Remarks*

This document is property of AUSTRIAN AEROSPACE Ges.m b.H.

Blankets/Foils

pcs.	Description	Part No.	S/N	Remarks
1	Blanket Front	G3990-301-001-00/B	01	
1	Blanket Skirt Right	G3990-301-002-00/B	01	
1	Blanket Skirt Left	G3990-301-003-00/B	01	
1	Blanket Feedhorn Top	G3990-301-004-00/A	01	
1	Blanket Feedhorn Lower	G3990-301-005-00/A	01	
1	Blanket Subreflector	G3990-301-006-00/A	01	
1	Blanket Tower Lower	G3990-301-007-00/B	01	
1	Blanket Tower Upper	G3990-301-008-00/A	01	
1	Blanket Bracket Left	G3990-301-009-00/A	01	
1	Blanket Bracket Right	G3990-301-010-00/A	01	
1	Blanket Bracket Left Corner	G3990-301-011-00/A	01	
1	Blanket Bracket Right Corner	G3990-301-012-00/A	01	
1	Blanket Bracket Front	G3990-301-013-00/A	01	
1	Blanket Bracket Front	G3990-301-013-00/A	01	

Attachment Hardware

pcs.	Description	Part No.	Remarks
13	Stand-off Ø4-5	G1390-250-100-00/a	
26	Stand-off Ø4-9,5	G1390-250-300-00/a	
64	Clipwasher Ø4/Ø15	SKQ-V10220/Rev.1	

Grounding Hardware

pcs.	Description	Part No.	Remarks
22	Bonding Lead (l=800 mm), Typ 02	BL0800TS-T02	structural part
6	Bonding Lead (l=900 mm), Typ 02	BL0900TS-T02	structural part

ORIGINAL