ORIGINALE ARCHIVIO

CARLO GAVAZZI SPACE SpA

AMS02-TCS

Tipo Doc.: *Doc. Type:*	VERIFICATION CONTROL DOCUMENT			N° DRD: *DRD N°:*	DEL 031
N° Doc.: *Doc. N°:*	**AMSTCS-VC-CGS-001**	Ediz.: *Issue:* **1**	Data: *Date:* **15/12/2008**	Pagina *Page* **1**	Di *Of* **62**
Titolo : *Title :*	**AMS-02 THERMAL VERIFICATION CONTROL DOCUMENT**				

	Nome & Funzione *Name & Function*	Firma *Signature*	Data *Date*
Preparato da: *Prepared by:*	Vettore C. (DT/MT)		15-12-2008
Approvato da: *Approved by:*	Cinquepalmi C. (PA/CC)		22.12.08
	Cremonesi L. (PA/QA)		18.12.08
	Molina M. (DT/MT)		18-12-08
	Vettore C. (DT/MT)		15-12-08
Applicazione autorizzata da: *Application authorized by:*	Olivier M. (DT/MT)		18.12.08
Customer / Higher Level Contractor			
Accettato da: *Accepted by:*	ASI		
Approvato da: *Approved by:*	ASI		

LISTA DI DISTRIBUZIONE *DISTRIBUTION LIST*	N	A	I
Interna / *Internal*			
Dell'Acqua A.	1		X
Lorenzi P.	1		X
Vitta M. (PA/QA)	1		x
Esterna / *External*			
E.Russo (ASI)	1		x

N=Numero di copie A=Applicazione I=Informazione
N=Number of copy A=Application I=Information

Gestione documenti: *Data Management:* 22.12.08
Firma / *Signature* Data / *Date*

File: AMSTCS-VC-CGS-001_Iss1.doc

Questo documento contiene informazioni di proprietà di CARLO GAVAZZI SPACE SpA: Tutti i diritti sono riservati
All information contained in this document are property of CARLO GAVAZZI SPACE SpA. All right reserved.

REGISTRAZIONE DELLE MODIFICHE / *CHANGE RECORD*			
EDIZIONE *ISSUE*	DATA *DATE*	AUTORIZZAZIONE *CHANGE AUTHORITY*	OGGETTO DELLA MODIFICA E SEZIONI AFFETTE *REASON FOR CHANGE AND AFFECTED SECTIONS*
1	15/12/2008		FIRST ISSUE

Questo documento contiene informazioni di proprietà di CARLO GAVAZZI SPACE SpA. Tutti i diritti sono riservati.
All information contained in this document are property of CARLO GAVAZZI SPACE SpA. All right reserved.

LISTA DELLE PAGINE VALIDE / *LIST OF VALID PAGES*

PAGINA *PAGE*	EDIZIONE *ISSUE*	PAGINA *PAGE*	EDIZIONE *ISSUE*	PAGINA *PAGE*	EDIZIONE *ISSUE*	PAGINA *PAGE*	EDIZIONE *ISSUE*	PAGINA *PAGE*	EDIZIONE *ISSUE*
1 - 62	1								

Questo documento contiene informazioni di proprietà di CARLO GAVAZZI SPACE SpA. Tutti i diritti sono riservati.
All information contained in this document are property of CARLO GAVAZZI SPACE SpA. All right reserved.

TABLE OF CONTENT

1. SCOPE 5

2. RELEVANT DOCUMENTS 5

2.1 APPLICABLE DOCUMENTS 5
2.2 REFERENCE DOCUMENTS 5
2.3 VERIFICATION DOCUMENTS 6

3. VCD TABLE 8

Questo documento contiene informazioni di proprietà di CARLO GAVAZZI SPACE SpA. Tutti i diritti sono riservati.
All information contained in this document are property of CARLO GAVAZZI SPACE SpA. All right reserved.

1. SCOPE

This document provides traceability data on status of verification activities associated with thermal technical requirements applicable to AMS-02 defined in AD[1].

This document corresponds to contract deliverable DEL 031.

This document is only a first issue and it is not exhaustive. Some of the thermal requirements are still under evaluation and the close-out reference shall be provided in the next issue.

2. RELEVANT DOCUMENTS

Documents here below identified are applicable and/or reference for the activities described in the present document and are considered part of it to the extent specified herein.

2.1 APPLICABLE DOCUMENTS

AD #	Doc Number	Iss.	Date	Rev	Title
1	AMSTCS-SP-CGS-003	1	March 25th, 2008	N/A	AMS-02 Thermal requirements specification document
2	JSC-28792	N/A	September 15th, 2003	C	AMS-02 Structural Verification Plan for the Space Transportation System and the International Space Station.
3	JSC29095 Part I	N/A	June 2002	N/A	AMS-02 Experiment/ Payload Integration Hardware (PIH) Interfaces
4	JSC29095 Part II	N/A	December 2004	A	AMS-02 Experiment/ Payload Integration Hardware (PIH) Interfaces
5	JSC29202	N/A	February 2005	C	Experiment/Vacuum Case Payload Integration Hardware Interface

2.2 REFERENCE DOCUMENTS

These documents are referenced herein, but do not formally constitute a baseline for requirements (used for clarification of requirements or other purpose).

RD #	Doc Number	Iss.	Date	Rev	Title
1	AMS02-RFWD-001	B	October 26th, 2007	N/A	TRACKER RADIATOR INNER AND OUTER SKIN THICKNESS CHANGE

Questo documento contiene informazioni di proprietà di CARLO GAVAZZI SPACE SpA. Tutti i diritti sono riservati.
All information contained in this document are property of CARLO GAVAZZI SPACE SpA. All right reserved.

2.3 VERIFICATION DOCUMENTS

These documents are referred herein to report requirements verification close-out.

VD#	DOC NUMBER	ISSUE	DATE	REV	TITLE
VD[1]	AMSTCS-TN-CGS-014	1	March 31st, 2008	N/A	AMS02 MLI DESCRIPTION REPORT
VD[2]	25-AMS-000.00.00	N/A	October 11th 2007	A	TRACKER RADIATOR ASSY
VD[3]	21-AMS-000.00.00	N/A	January 10th, 2008	B	RAM RADIATOR ASSY
VD[4]	22-AMS-000.00.00	N/A	May 26th, 2008	C	WAKE RADIATOR ASSY
VD[5]	41-AMS02TCS.000.00.01	N/A	March 20th, 2008	/	RAM RADIATOR ICD
VD[6]	42-AMS02TCS.000.00.01	N/A	March 20th, 2008	/	WAKE RADIATOR ICD
VD[7]	AMS-AD-CAB-00000-CRS	2	November 30th, 2007	N/A	AMS02 CAB INTERFACE CONTROL DRAWING
VD[8]	RTEM-DP-0004-AAE	1	September 19th, 2008	N/A	RICH LATERAL MLI ACCEPTANCE DATA PACKAGE
VD[9]	AMSC-DP-0001-AAE	1	October 24th, 2007	N/A	TRACKER BOTTOM MLI ADP
VD[10]	AMSC-DP-0002-AAE	1	July 14th, 2008	N/A	XPD/CRATES INTERNAL MLI ADP
VD[11]	A2LM-DP-0001-AAE	1	October 28th, 2008	N/A	AMS-02 LATE MLI – BRICKS MLI ADP
VD[12]	SDG39137616	N/A	October 6th, 2005	N/A	MINUS Y AND PLUS Y VACUUM CHAMBER BLANKET
VD[13]	E-mail from John Cornwell	N/A	September 12th, 2007	N/A	AMS Blanket Masses
VD[14]	RICSYS-RP-CGS-008	2	June 13th, 2008	N/A	TOF THERMAL CONTROL SYSTEM DESIGN REPORT
VD[15]	AMS-OHB-TAR-003	3	October 24th, 2006	D	AMS02 TRD AND U-TOF THERMAL ANALYSIS REPORT
VD[16]	E-mail from Klaus Lubsmeeyer	N/A	May 15th, 2008	N/A	TRD Thermal Reference Points
VD[17]	E-mail from Klaus Lubsmeeyer	N/A	November 11th, 2008	N/A	TRD thermocouples
VD[18]	AMSTCS-TN-CGS-004	1	March 31st,2008	N/A	MAIN AND TRACKER RADIATOR THERMAL ANALYSIS REPORT
VD[19]	AMS02-RP-CGS-008	2	June 13th, 2005	N/A	AMS-02 EHV AND RHV BRICKS THERMAL ANALYSIS REPORT
VD[20]	ENVRPT24_S3009-UPPER TOF-28AGO2K7	1	August 28th, 2007	N/A	UPPER TOF ENVIRONMENTAL TEST REPORT
VD[21]	RICSYS-RP-CGS-018	1	July 4th, 2006	\	TOF FM THERMAL TEST REPORT
VD[22]	CAB-AN-CRS-0030_Iss2.pdf	2	17 october 2005	N/A	Ams02 cab thermal analysis
VD[23]	AMSTCS-TN-CGS-009	1	March 31st, 2008	N/A	CAB TCS THERMAL ANALYSYS REPORT
VD[24]	ESCG-4470-06-TEAN-DOC-0086	1	July 7th, 2006	N/A	THERMAL ANALYSIS OF TRANSITION RADIATION DETECTOR (TRD) GAS SYSTEM FOR AMS-02
VD[25]	E-mail from D.Rapin	N/A	December, 2008	N/A	DS and TC positions in the tracker
VD[26]	ET-5998-06	1	November 14th 2008	N/A	Assembly drawing Thermal Tracker Control Box FM Primary Loop
VD[27]	ET-5998-08	1	November 14th 2008	N/A	Assembly drawing Thermal Tracker Control Box FM Secondary Loop
VD[28]	TTCS-SYSU-TEST-PR-002-1 0	N/A	January 8th 2008	N/A	TTCS EM µ-G Test Report for Secondary Loop
VD[29]	TTCS-SYSU-TEST-PR-002-1 0	N/A	April 14th	N/A	TTCS Test Report fort Micro-g 1st Loop Performance

Questo documento contiene informazioni di proprietà di CARLO GAVAZZI SPACE SpA. Tutti i diritti sono riservati.
All information contained in this document are property of CARLO GAVAZZI SPACE SpA. All right reserved.

VD#	DOC NUMBER	ISSUE	DATE	REV	TITLE
			2008		Test
VD[30]	TTCS-SYSU-TEST-TRP-010-1.0	1	September 20th 2008	N/A	TTCS EM Test Report for both 1st and 2nd loop in 3D lay out
VD[31]	AMSTR-NLR-TN-044	1.2	July 2007	N/A	TTCS Safety Approach
VD[32]	TTCS-SYSU-Simu-PR-003-1.0	1	November 20th , 2006	N/A	TTCS THERMAL ANALYSIS RESULTS_TTCS VER1.0
VD[33]	AMSTR-NLR-TN-039	3	August 23rd 2005	N/A	TTCS Condenser Freezing Test Report
VD[34]	AMSTR-NLR-TN-24	4	May 15th 2008	N/A	AMS02 TTCE Interface Control Document
VD[35]	AMSTR-NLR-TN-043	3	September, 1st , 2006	N/A	TTCS Heater Specifications
VD[36]	ET-5998-09	B	October 10th 2008	N/A	Condenser Assembly Drawing Primary Wake/Secondary RAM
VD[37]	ET-5998-10	A	October 10th 2008	N/A	Condenser Assembly Drawing Secondary Wake/Primary RAM
VD[38]	Shu Shen Lu presentation	N/A	January 5th, 2005	N/A	Report on TTCS Simulation and Design (author S.S.Lu)
VD[39]	AMSTR-NLR-TN-05	2	November 2004	N/A	TTCS SYSTEM DESIGN DESCRIPTION
VD[40]	AMSTCS-RP-CGS-007	1	October 17th, 2008	N/A	TCS PFM Inspection Report
VD[41]	45-AMS02TCS.000.00.01	N/A	March 20th 2008	/	TRACKER RADIATOR ICD
VD[42]	AMSTCS-RP-CGS-003	1	March 25th, 2008	N/A	AMS-02 SYSTEM THERMAL ANALYSIS REPORT
VD[43]	AMS02-TN-CGS-007	2	October 16th, 2006	N/A	AMS-02 120VDC AND 28VDC HEATER DESCRIPTION
VD[44]	PDS-IC-CGS-001	1	March 28th , 2008	N/A	PDS FM ELECTRICAL/FUNCTIONAL , MECHANICAL ICD
VD[45]	SCD1052	9	\	N/A	PVVV + WARM He TANK ASSEMBLY
VD[46]	AMS02-RP-CGS-014	1	February 12nd, 2007	N/A	AMS02 THERMAL ANALYSIS REPORT: SURVEY AND SYSTEM LEVEL MODEL RESULTS
VD[47]	RICSYS-RP-CGS-015	2	March 7th , 2005	N/A	ECAL THERMAL ANALYSIS REPORT
VD[48]	AMSTCS-TN-CGS-012	1	March 31th, 2008	N/A	CRYO TCS THERMAL ANALYSIS REPORT

Questo documento contiene informazioni di proprietà di CARLO GAVAZZI SPACE SpA. Tutti i diritti sono riservati.
All information contained in this document are property of CARLO GAVAZZI SPACE SpA. All right reserved.

3. VCD TABLE

The VCD table is composed as follows:

Req. # : this is the requirement identification number; the requirement is identified by its ID in the following format (example): *AMSTH-Paragraph –Requirement number*, where AMSTH is an identification of the AMS-02 System Specification thermal requirements (AD[1]).
In the verification table this identification tag (i.e AMSTH) is not repeated but only the requirement paragraph and number are referenced.

Requirement Text : the requirement text (for info only, actual valid requirement text shall be found in the requirements specification document)

RFW : Request for Waiver reference (if any)

Ver. Level/Ver. Method :
The Verification Method (in accordance with AD[1]) is one of:

- **T**: Test
- **ROD**: Review Of design
- **A:** Analysis
- **I** : Inspection
- **S** : similarity (similarity with similar qualifications or applications)

The Verification level (in accordance with AD[1]) is one of:

- **Equipment (EQ)**: PMTs, electronic boards, tracker silicon plane…
- **Sub-system (SS)**: AMS-02 single sub-detector
- **System (SY):** AMS-02 experiment

Verification Document: it is the document that contains the close-out of the requirement.
VD paragraph : It is the section in the Verification Document where the close-out of the requirement is described.
Ver. Status : it is the status of requirements verification (i.e. open, closed, pending due to …)

Questo documento contiene informazioni di proprietà di CARLO GAVAZZI SPACE SpA. Tutti i diritti sono riservati.
All information contained in this document are property of CARLO GAVAZZI SPACE SpA. All right reserved.

Req. #	Requirement Text	RFW	Ver. Level/ Method	VERIFICATION DOCUMENT	VD Paragraph	Ver. Status
3	TRD					
3.1	TEMPERATURE REFERENCE POINT					
-3.1 -010	All the temperature requirements of the TRD sub-detector, unless differently specified, shall refer to Temperature Reference Points (TRP). TRD mounting brackets are the location for TRD Temperature Reference Point. Their temperatures can be related to the general status of the equipment and to the critical components, which are flipper valves, electronic boards, O-ring of the manifolds.		EQ / ROD,S SS/ ROD	EQ/ROD,S see VD[15]. SS/ROD see VD[16] and VD[17].	Section 11 of VD[15]. Some other TRPs have been added.	Closed.
3.2	TEMPERATURE RANGES					
-3.2 -010	The TRD operative temperature range shall be: from –20°C to+40 °C .(See reference e-mail by Klaus L.) Best performance range is +10 °C to +25 °C.		SS / A SY / T	See VD[15]. TV system pending.		
-3.2 -011	DOR (Double-O-ring) - Connectors operative temperature range shall be: from -20°C to +40°C		EQ / T			
-3.2 -012	DOR (Double-O-ring) - Connectors non operative temperature range shall be: from -25 °C to +40°C		EQ / T			
-3.2 -013	Manifold operative temperature range shall be: from -20°C to +40°C		EQ / T			
-3.2 -014	Manifold non operative temperature range shall be: from -25°C to 40°C		EQ / T			
-3.2 -015	TRD Straw module operative temperature range shall be: from -20°C to +40°C		EQ / T			
-3.2 -016	TRD Straw module non operative temperature range shall be: from -25°C to +40°C		EQ / T			
-3.2 -018	Flipper Valve Switching Operat. Range : 0°C to 40°C		EQ / T			
-3.2 -020	The TRD non operative temperature range shall be: from -25 °C to +40 °C.		SS / A SY / T	SS/A See VD[15].		TV system pending.
3.3	SHORT-TERM TEMPERATURE STABILITY					
-3.3 -010	The temperature variation along one orbit shall be within ±1°C.		SS / A SY / T	SS/A See VD[15]. TV system pending.	SS/A See section 6 of VD[15].	TV system pending.
3.4	TEMPERATURE GRADIENTS					

Questo documento contiene informazioni di proprietà di CARLO GAVAZZI SPACE SpA. Tutti i diritti sono riservati.
All information contained in this document are property of CARLO GAVAZZI SPACE SpA. All right reserved.

Req. #	Requirement Text	RFW	Ver. Level/ Method	VERIFICATION DOCUMENT	VD Paragraph	Ver. Status
-3.4 -010	The spatial temperature gradient between the top and the bottom shall not exceed 3°C.		SS / A SY / T	SS/A See VD[15].	SS/A See section 6.2.2	TV system pending.
-3.4 -020	The spatial temperature gradient along the periphery shall not exceed 3°C.		SS / A SY / T	SS/A See VD[15].		TV system pending.
3.5	**HEAT DISSIPATION**					
-3.5 -010	The TRD dissipation is **18.5 W** (82 PCB, 0.226 W each).		SS / ROD, T SY / T	SS/ROD See VD[15].	SS/ROD See section 3.3 of the VD[15]. SS/T	TV system pending.
-3.5 -020	The TRD thermal control concept is based on conduction of the dissipated heat to the USS-02 and on radiative heat exchange through MLI enclosure.		SS / ROD SY / ROD	SS/ROD See VD[15]. SY/ROD See VD[15].		Closed.
3.5.1	**HEATERS**					
-3.5.1 -010	To bring the TRD global temperature above 0°C for the worst cold case, each of the 4 M-units will be heated by 17,5 W (total 70W) at 120V.		SS / ROD,T SY / T	SS / ROD See VD[15]. SS/T		TV system pending.
3.6	**SUB-DECTECTORS THERMAL INTERFACE DESCRIPTION**					
3.6.1	**CONDUCTIVE**					
-3.6.1 -010	The TRD is mounted on a dedicated M structure, mechanically constrained to the USS.		SS / I	See VD[15].		Closed.
-3.6.1 -020	The conductive coupling (Aluminum brackets + interface conductance) for each of the 4 support brackets shall be 0.483 W/K .		SS / ROD	SS / ROD See VD[15].	Section 3.4 of VD[15].	Closed

Questo documento contiene informazioni di proprietà di CARLO GAVAZZI SPACE SpA. Tutti i diritti sono riservati.
All information contained in this document are property of CARLO GAVAZZI SPACE SpA. All right reserved.

Req. #	Requirement Text	RFW	Ver. Level/ Method	VERIFICATION DOCUMENT	VD Paragraph	Ver. Status
-3.6.1 -030	Gas tubes and electrical cables provide additional thermal links. The TRD Signal cables (82 pieces ; 4 m long) overall conductive coupling shall be 0.06 W/K. The TRD Senscables (8 pieces ; 4 m long) overall conductive coupling shall be 0.009 W/K. The HV cable (82 pieces ; 4 m long) overall conductive coupling shall be 0.006 W/K. *These links are not taken into account in system level TMM.*		SS/ ROD	SS / ROD See VD[15]	Section 4.1 of VD[15] states that "no leaks due to clabe".	
3.6.2	**RADIATIVE**					
3.6.2.1	**MLI**					
-3.6.2.1 - 010	TRD shall be completely wrapped, together with Upper TOF, by MLI in order to minimize heat transfer with the surroundings and reduce internal gradients. The TRD outer layer shall be composed by Beta Cloth. In system level thermal model values provided by Austrian Aerospace for 20 layers MLI are used with a degradation factor of 10. *In detailed thermal model a value of $\varepsilon^* = 0.03$ is used.*		SS/ ROD,I	See VD[1] and VD[15].		
-3.6.2.1 - 020	TRD MLI shall weigh less than 11.1 Kg		EQ/ ROD,T	EQ/ ROD,T See VD[13].	TRD MLI mass is 8,55Kg.	CLOSED.
3.7	**HEAT EXCHANGE REQUIREMENTS WITH NEIGHBORING SUBDETECTORS**					
-3.7 -010	The heat leak toward Vacuum case (nadir direction) shall be minimized. The TRD dissipation shall be rejected at the larger extent towards the USS-02 upper joints, by linear conductance, via the four support brackets.		SS / ROD	See VD[15].		
3.8	**TRD GAS BOX**					
-3.8-005	All the temperature requirements of the TRDGB, unless differently specified, shall refer to Temperature Reference Points (TRP). TRP is defined on TRDGB aluminum plate. Its temperature can be related to the general status of the equipment and to the critical components.		EQ/ ROD,S SS/ROD			Pending.

Questo documento contiene informazioni di proprietà di CARLO GAVAZZI SPACE SpA. Tutti i diritti sono riservati.
All information contained in this document are property of CARLO GAVAZZI SPACE SpA. All right reserved.

Req. #	Requirement Text	RFW	Ver. Level/ Method	VERIFICATION DOCUMENT	VD Paragraph	Ver. Status
-3.8-010	Temperature Operational range: generic -10°C to + 40°C for valve gas tightness Valves: +5 °C ÷+55°C Pump: +5 °C ÷+40°C for residual fluid volume measurement Xe tank : +20 °C ÷+65°C CO2 tank: +34 °C ÷+65°C	*Partially compliant*	EQ/T SS/A	EQ/T : no test report available. See VD[24].		Pending test data for the EQ/T Minimum cold operative temperature for the CO2 tank is not reached in the worst cold case. Maximum operative temperature for pump non respected. The pump temperature shall be monitored on orbit and operational constraints may need to be implemented during hot periods.
-3.8-020	Temperature Non Operational ranges: Valves: for valve gas tightness -20°C ÷+65°C Xe tank : -51 °C ÷+65°C CO2 tank: -73 °C ÷+65°C		EQ/T	No test report available.		
-3.8-030	Heat Dissipation (Supply) 0.6W on the Tower Valve group 0.3W on the upper 2-valve group		EQ/T	No test report available.		
-3.8-040	Heat Dissipation (Circulation) 3.6W		EQ/T SY/T	No test report available.		
-3.8-050	Mechanical Design (Supply) Fixation point: USS02		SY/ROD, I	TRDGB Interface Control Drawing not yet available.		

Questo documento contiene informazioni di proprietà di CARLO GAVAZZI SPACE SpA. Tutti i diritti sono riservati.
All information contained in this document are property of CARLO GAVAZZI SPACE SpA. All right reserved.

Req. #	Requirement Text	RFW	Ver. Level/ Method	VERIFICATION DOCUMENT	VD Paragraph	Ver. Status
-3.8-060	Mechanical Design (Circulation) Fixation point: USS02		SY/ROD, I	TRDGB Interface Control Drawing not yet available.		
-3.8-070	Thermal I/F (Supply) Conduction to USS02		SS/ROD	See VD[24].		CLOSED.
-3.8-080	Thermal I/F (Circulation) Conduction to USS02		SS/ROD	See VD[24].		CLOSED.
-3.8-090	TRDGB (supply + circuitry + pumps) is entirely wrapped within MLI		SS/ROD, I	See VD[24] and VD[1].		CLOSED.
-3.8-100	TRDGB MLI weight shall be within TRDGB weight budget.		SS/ROD	No mass budget definition available.		
4	**UPPER TOF**					
4.1	**TEMPERATURE REFERENCE POINT**					
-4.1 -010	All the temperature requirements of the UPPER TOF sub-detector shall refer to Temperature Reference Points (TRP). The location of the TRPs is at PMT level, one per side of the TOF, relevant to the PMT in mid location. Hence, totally 4 TRPs are foreseen.		EQ / ROD SS / ROD			
4.2	**TEMPERATURE RANGES**					
-4.2 -010	The operative temperature range shall be: from -30 °C to +45 °C on the PMT, which corresponds to -32°C to +43°C on the accessible location for the Dallas sensors.		EQ / S,T SS / A,S SY / A	EQ/S,T See () SS/A See VD[15]. SY/A ()		
-4.2 -020	The non operative temperature range shall be: from -35 °C to +50°C.		EQ / S,T SS / A,S SY / A	EQ/S,T See () SS/A See VD[15]. SY/A ()		
4.3	**SHORT-TERM TEMPERATURE STABILITY**					
-4.3 -010	The peak-to-peak temperature variation along one orbit shall be within 5°C.		SS / A	See VD[15].		CLOSED.
4.4	**TEMPERATURE GRADIENTS**					

Questo documento contiene informazioni di proprietà di CARLO GAVAZZI SPACE SpA. Tutti i diritti sono riservati.
All information contained in this document are property of CARLO GAVAZZI SPACE SpA. All right reserved.

Req. #	Requirement Text	RFW	Ver. Level/ Method	VERIFICATION DOCUMENT	VD Paragraph	Ver. Status
-4.4 -010	The spatial temperature gradient between the TOF structure (carbon fiber box) and the PMTs shall not exceed 10°C.		SS / A, T SY / T	SS / A See VD[15]. SS/ T See VD[20].		TV system pending.
4.5	**HEAT DISSIPATION**					
-4.5 -010	3.68W are dissipated on the 68PMTs, 0.130 W are dissipated on the 4 SFEC boards, for a total of 0.52 W. The total heat dissipated is then 4.2W		EQ / T SS / T SY / T	EQ/T See () SS/T See () SY/T		TV system pending.
4.6	**MECHANICAL DESIGN**					
-4.6 -010	A carbon fiber box is used to encapsulate the PMTs		SS / ROD	See VD[15].		CLOSED.
4.7	**SUB-DETECTOR THERMAL IF DESCRIPTION**					
4.7.1	**CONDUCTIVE**					
-4.7.1 -010	The PMTs are conductively thermally decoupled from the structure. For this reason no requirement applies to the conductance from the Upper TOF panels to the M structure *that must be lower than 10W/K.*		SS / ROD	See VD[15].		CLOSED.
4.7.2	**RADIATIVE**					
-4.7.2 -010	No external radiator is used for the Upper TOF.		SS / ROD	See VD[15].		CLOSED
4.8	**HEAT EXCHANGE REQUIREMENTS WITH NEIGHBORING SUBDETECTORS**					
-4.8 -10	The Upper TOF detector shall be thermally coupled to the TRD.		SS / ROD	See VD[15].		CLOSED.
5	**TRACKER**					
5.1	**TEMPERATURE REFERENCE POINT**					
-5.1 -010	All the temperature requirements of the TRACKER sub-detector shall refer to Temperature Reference Points (TRP). The location of the TRP is defined by the equipment supplier **on the TTCS evaporator**; its temperature can be related to the general status of the equipment and the critical components.		EQ / ROD SS / ROD			

Questo documento contiene informazioni di proprietà di CARLO GAVAZZI SPACE SpA. Tutti I diritti sono riservati.
All information contained in this document are property of CARLO GAVAZZI SPACE SpA. All right reserved.

Req. #	Requirement Text	RFW	Ver. Level/ Method	VERIFICATION DOCUMENT	VD Paragraph	Ver. Status
-5.1 -020	Two TRPs have been defined for the Tracker Thermal Control Box (TTCB) TRPs , located respectively on TTCB radiator, and on TTCB baseplate.		EQ / ROD SS / ROD	SeeVD[26] and VD[27].		
5.2	TEMPERATURE RANGES					
-5.2 -010	The operative temperature of silicon wafers shall be: from -10 °C to +25 °C.		EQ / S, T			
-5.2 -015	The minimum switch on temperature of silicon wafers shall be -20 °C TBC by INFN (Tracker).		EQ / S, T			
-5.2 -020	The non operative temperature of silicon wafers shall be: from -20 °C to +40 °C.		EQ / S, T			
-5.2 -030	The operative temperature of hybrids shall be: from -10 °C to +25 °C.		SS / S, T, A			
-5.2 -035	The minimum switch on temperature of hybrids shall be -20°C		SS / S			
-5.2 -040	The non operative temperature of hybrids shall be: from -20 °C to +40 °C.		SS / T			
-5.2 -050	The operative temperature of evaporator shall be: from -10 °C to +25 °C. The (set-point) operative temperature of evaporator shall be: from -15 °C to +15 °C.		EQ / T SS / A SS changed to T	See VD[28]and VD[29] See VD[28]and VD[29] See VD[30] for extremes.	See section 8.2.2 and 8.3.2 of VD[28] See section 8.3 of VD[29] See section 7.3 of VD[30]	CLOSED.
-5.2 -060	The non operative temperature of evaporator shall be: from -40 °C to +80 °C.		EQ / T			
-5.2 -070	The operative temperature of condenser shall be: from -50 °C to +25 °C.		SS / A	See VD[32] and VD[38].	Sections 4.1.2 & 4.1.3 of VD[32].	CLOSED.

Questo documento contiene informazioni di proprietà di CARLO GAVAZZI SPACE SpA. Tutti i diritti sono riservati.
All information contained in this document are property of CARLO GAVAZZI SPACE SpA. All right reserved.

Req. #	Requirement Text	RFW	Ver. Level/ Method	VERIFICATION DOCUMENT	VD Paragraph	Ver. Status
-5.2 -080	The non operative temperature of condenser shall be: from -100 °C to +80 °C. The non operative temperature of the condenser shall be from -130°C to +80°C		EQ / T	See VD[33]and **Errore. L'origine riferimento non è stata trovata..**		Pending SYSU condenser test (first results after T-cycling show good performance)
-5.2 -220	The maximum temperature of the unloaded radiator shall not exceed +5°C.		SY / A	See VD[38]		Pending new interface data for ISS changes.
-5.2 -230	The temperature of the condenser before running the loop shall be above -40°C		SY / A	See VD[38]		Pending new interface data for ISS changes.
-5.2 -240	The minimum temperature of the long period un-powered loop-connected TTCB components shall be for safety reasons above –40°C		SS / A	See VD[24].		Pending new interface data for ISS changes.
-5.2 -250	The minimum temperature of the manifolds shall be for safety reasons above –50°C in the extreme cold case.		SS / A	See VD[24].	See Table 4 at page 8.	CLOSED.
-5.2 -260	The working Tracker loop fluid operative range is -15°C to + 15°C	*Partially compliant*	SS / A	See VD[28] and VD[29] See VD[30]for extremes.	VD[28]: section 8.2.2 and 8.3.2 VD[29] : section 8.3 VD[30] : section 7.3	CLOSED.
5.3	**SHORT-TERM TEMPERATURE STABILITY**					
-5.3 -010	The peak-to-peak temperature variation along one orbit for the silicon wafers shall be within 3°C.		SS / A	See VD[32]	All cases first figures & section 4.1.4	CLOSED.
5.4	**TEMPERATURE GRADIENTS**					
-5.4 -010	The spatial temperature gradient between the Tracker elements shall not exceed 10°C.		SS / A SY / T	See VD[32]	Section 4.1.4	TV system pending.
5.5	**HEAT DISSIPATION**					
-5.5 -010	The total amount of power generated by hybrids is 144 W (± 10%).		SS / ROD,T SY / T			Pending system TV test.

Questo documento contiene informazioni di proprietà di CARLO GAVAZZI SPACE SpA. Tutti i diritti sono riservati.
All information contained in this document are property of CARLO GAVAZZI SPACE SpA. All right reserved.

Req. #	Requirement Text	RFW	Ver. Level/ Method	VERIFICATION DOCUMENT	VD Paragraph	Ver. Status
-5.5 -011	The maximum power dissipated by the pump is 10 W		EQ / ROD, T SY / T	See FM & QM Pump Functional Check procedure.		No distinction has been made between pump and pump controller. Estimated controller power 2.3 W nominal. SY / T pending system TV test.
-5.5 -012	The maximum power dissipated by the pump electronics (mounted on the TTCB baseplate) is 5 W		EQ / ROD, T SY / T	See FM & QM Pump Functional Check procedure.		No distinction has been made between pump and pump controller. Estimated controller power 2.3 W nominal. SY / T pending system TV test
-5.5 -013	The maximum power dissipated by the APS/DPS is 0.2 W each		EQ / ROD, T SY / T	EQ/ ROD See VD[34]. EQ/	Section 5.4.3	All below 0.1 Watt SY / T pending system TV test.
-5.5 -014	The maximum heat dissipated by the accumulator control is 75 Watt heater power and 100 W Peltier power		EQ / ROD, T SY / T	EQ / ROD, T See VD[34], VD[35]	VD[34] section 5.2.9. VD[35] section 4.2 Step 7 & step 12-15	Pending update VD[35] to be released. SY / T pending system TV test.
-5.5 -020	An active cooling loop (called TTCS, Tracker Thermal Control System) shall collect the dissipated power and bring it to dedicated Ram and Wake tracker radiators.		SS / ROD	SS / ROD See VD[39].		CLOSED.
-5.5 -030	The extra heat (generated by components of the cooling loop as pumps and pre-heaters located in the TTCB), shall be brought, via the loop, to the same radiators.		SS / A	SS / A See VD[32].		CLOSED.

Questo documento contiene informazioni di proprietà di CARLO GAVAZZI SPACE SpA. Tutti i diritti sono riservati.
All information contained in this document are property of CARLO GAVAZZI SPACE SpA. All right reserved.

Req. #	Requirement Text	RFW	Ver. Level/ Method	VERIFICATION DOCUMENT	VD Paragraph	Ver. Status
-5.5 -040	The extra power generated in the loop shall be lower than 50 Watt, depending on the temperature of the radiator.		SS / A SY / T	SS/A See VD[32].	Section 4.5	Pending a clear sum of all components power during on during nominal hot & cold operation should be added. Pending system TV test.
-5.5 -050	Tracker thermal cooling system shall absorb Star Tracker dissipation.		SS / A	SS / A See VD[32].		CLOSED.
5.5.1	**HEATERS**					
-5.5.1 -010	The 28V Pre-heaters consumption shall be according to RD[7] (i.e. TTCS heater specification document).		SS / A,T SY / T	SS / A See VD[32] SS/T See VD[29] and VD[30].		Pending system TV test.
-5.5.1 -015	The 28V Cold orbit heaters consumption shall be according to RD[7]		SS / A,T SY / T	SS / A See VD[32] SS/T See VD[29] and VD[30].		Pending system TV test.
-5.5.1 -020	The 28V Start-up heaters consumption shall be according to RD[7]		SS / A,T SY / T	SS / A See VD[32] SS/T See VD[29] and VD[30].		Pending system TV test.
-5.5.1 -025	The 28V Accumulator (control and emergency) heaters consumption shall be according to RD[7]		SS / A,T SY / T	SS / A See VD[32] SS/T See VD[29] and VD[30].		CLOSED for FM2. pending for FM1 and QM
-5.5.1 -030	The 120V Tracker radiator and condenser heaters consumption shall be according to RD[7]		SS / A SY / T	SS/A See VD[38].		Pending system TV test.

Questo documento contiene informazioni di proprietà di CARLO GAVAZZI SPACE SpA. Tutti i diritti sono riservati.
All information contained in this document are property of CARLO GAVAZZI SPACE SpA. All right reserved.

Req. #	Requirement Text	RFW	Ver. Level/ Method	VERIFICATION DOCUMENT	VD Paragraph	Ver. Status
-5.5.1 -035	The 28V TTCS liquid line heaters consumption shall be according to RD[7]		SS / A,T SY / T	SS / A See VD[32] SS/T See VD[29] and VD[30].		Pending the installation of the heaters
5.6	**SUBDETECTOR THERMAL IF DESCRIPTION**					
5.6.1	**CONDUCTIVE**					
-5.6.1 -010	The Tracker shall be mechanically connected to 2 (top and bottom) x 4 (around periphery) points to the vacuum case, by means of titanium support feet providing an interface conductance of **27.5 mW/K** per foot.		SS / ROD			
-5.6.1 -020	A thermal link from the Tracker hybrids (front-end) to the 8 crates is due to the cables. Eight bundles of approx 3 meter long cables connect the tracker hybrids (front-ends) to the 8 crates. Each bundle shall consist of 48 flat cables with 1.1 * 39.5 mmcross section per cable. A well packed bundle will have a cross section of about 5cm * 4cm. The thermal conductance is estimated in 16 mW/K for each 3 meter long bundle (total 128 mW/K). In system thermal model the link is neglected. **It shall be used by TTCS detailed model for parasitic heat leak estimate to the loop.**		SS / ROD			
5.6.2	**RADIATIVE**					
-5.6.2 -010	Tracker outer planes and Vacuum Case top and bottom conical flanges face MLI. They have an emissivity value based on carbon fiber without any surface treatment, namely 0.8.		SS / ROD,I	SS / ROD See MLI description document (VD[1])		CLOSED. Inspection not done yet.
5.6.2.1	**MLI**					
-5.6.2.1 - 010	The lower plane of the Tracker shall be protected from the external environment by means of 7 layers of MLI blanket.		SS / ROD,I	SS/ROD See MLI description document (VD[1]) SS/I See VD[9].		CLOSED.
-5.6.2.1 - 030	Tracker lower disk MLI shall weigh less than 1.8 Kg		EQ / T	EQ / T See VD[9].		CLOSED.
5.6.2.2	**RADIATOR**					

Questo documento contiene informazioni di proprietà di CARLO GAVAZZI SPACE SpA. Tutti i diritti sono riservati.
All information contained in this document are property of CARLO GAVAZZI SPACE SpA. All right reserved.

Req. #	Requirement Text	RFW	Ver. Level/ Method	VERIFICATION DOCUMENT	VD Paragraph	Ver. Status
-5.6.2.2 - 010	The thermo optical properties of the external radiator surfaces is white paint		SS / ROD,I	SS/ROD See Tracker Radiator assembly drawings (VD[2]). SS/I See Inspection report VD[40].		CLOSED..
5.6.2.2.1	**MECHANICAL DESIGN**					
-5.6.2.2.1-010	Tracker radiators shall be tilted 45.1° with respect to plane XY.		SY / ROD			
-5.6.2.2.1-020	Tracker radiators shall have a trapezium shape, with the following dimensions: Major basis : 2600 mm Minor basis : 2127 mm Height : 518.6 mm Area: 1.226 m^2		SS / ROD,T	SS/ROD See Tracker Radiator assembly drawings (VD[2]).		CLOSED.
-5.6.2.2.1-030	Tracker radiators shall be composed by a 14 mm thick ROHACELL 51 WF foam, with 2 aluminum face sheets on both sides, the inner 0.2 mm thick, the outer 0.8 mm thick.	*See RD[1]*	SS / ROD	SS/ROD See Tracker Radiator assembly drawings (VD[2])		CLOSED.
-5.6.2.2.1-040	Tracker radiators mass (each): 13kg.		SS / T	SS/T See Tracker mass budget.		Closed. Effective mass is 13.6Kg and 13.3Kg.
-5.6.2.2.1-050	Tracker radiators rods mass: 5.5kg.		EQ / T			Open.
-5.6.2.2.1-060	Seven heat pipes are embedded in each Tracker radiator panel, with a pitch of 70 mm.		SS / ROD	SS / ROD See Tracker Radiator assembly drawings (VD[2])		CLOSED.
5.6.2.2.2	**RADIATOR INTERFACES**					
5.6.2.2.2.1	**RADIATIVE**					
- 5.6.2.2.2.1 -010	Backward radiation is minimized by means of 7 layer MLI blankets, 1 Beta Cloth layer. Its external t/o properties shall be Beta Cloth		SS / ROD	SS / ROD See MLI description document (VD[1])		CLOSED.

Questo documento contiene informazioni di proprietà di CARLO GAVAZZI SPACE SpA. Tutti i diritti sono riservati.
All information contained in this document are property of CARLO GAVAZZI SPACE SpA. All right reserved.

Req. #	Requirement Text	RFW	Ver. Level/ Method	VERIFICATION DOCUMENT	VD Paragraph	Ver. Status
- *5.6.2.2.2.1 -020*	Tracker radiator MLI shall weigh less than 0.8 Kg per each radiator (total = 1.6 Kg)		EQ / ROD, T	EQ / ROD See MLI description document (VD[1])		EQ / T Pending blankets ADP.
- *5.6.2.2.2.1 -030*	Tracker radiator rods shall be protected by a single layer of Beta Cloth		SS / ROD	See MLI description document (VD[1])		CLOSED.
- *5.6.2.2.2.1 -040*	Tracker radiator rods Beta Cloth shall weigh in total less than 0.9 kg for all the 16 rods		EQ / T			EQ / T Pending blankets ADP.
5.6.2.2.2.2	**CONDUCTIVE**					
- *5.6.2.2.2.2 -010*	The conduction from the radiator to the USS shall be lower **than 0.1 W/K** for each fixation point. The rods are modeled as a network.		EQ / ROD			

Questo documento contiene informazioni di proprietà di CARLO GAVAZZI SPACE SpA. Tutti i diritti sono riservati.
All information contained in this document are property of CARLO GAVAZZI SPACE SpA. All right reserved.

Req. #	Requirement Text	RFW	Ver. Level/ Method	VERIFICATION DOCUMENT	VD Paragraph	Ver. Status
- *5.6.2.2.2.2 -020*	The mechanical interface between the Tracker CO_2 loop condensers and the radiator shall be showed in a dedicated ICD. Two condensers assemblies are placed behind each radiator (four condensers assemblies in total). The interface is provided by means of 98 bolts (X 2) on each radiator, according to the cross section in figure 5-9. 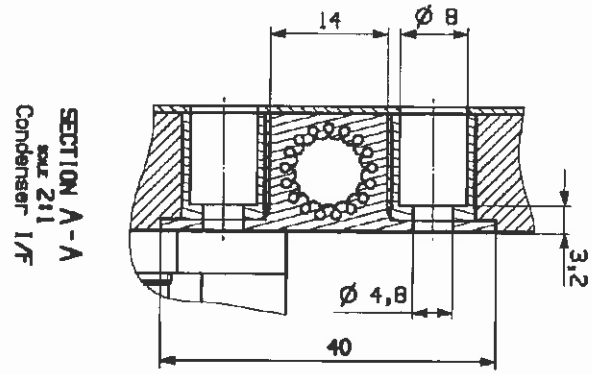 *Fig. 5-9 - Condenser mounting concept (cross section)*		SS / ROD	SS / ROD See Tracker radiator ICD (VD[41]) and Condenser assembly drawings (VD[36] and VD[37])		CLOSED.
5.6.2.3	**TTCS PIPE ROUTING**					
-5.6.2.3 - 010	The 2 TTCS loops (Main and redundant) are mechanically supported by two dedicated CFRP beams. One of these two beams is shared with LHP tubing.		SS / ROD			
-5.6.2.3 - 020	The non-shared beam shall weigh 2.5 kg		EQ / T			
-5.6.2.3 - 030	Pipes and supporting tubes shall be wrapped in MLI		SS / ROD	See MLI description document (VD[1])		
5.7	**HEAT EXCHANGE REQUIREMENTS WITH NEIGHBORING SUBDETECTORS**					

Questo documento contiene informazioni di proprietà di CARLO GAVAZZI SPACE SpA. Tutti i diritti sono riservati.
All information contained in this document are property of CARLO GAVAZZI SPACE SpA. All right reserved.

Req. #	Requirement Text	RFW	Ver. Level/ Method	VERIFICATION DOCUMENT	VD Paragraph	Ver. Status
-5.7 -010	The goal is to have a negligible amount of power radiated in ZENITH (toward Upper TOF/TRD) – NADIR directions (toward Lower TOF), hence upper and lower Tracker honeycomb planes shall be covered by MLI		SS / ROD	See MLI description document (VD[1])		CLOSED.
5.8	**TTCB**					
-5.8 -010	Temperature Operational range For electronic: -20 °C ÷+85°C For USSI/F: -40 °C ÷+55°C For fluid: -15 °C ÷+15°C		EQ / T SS / A,T			
-5.8 -020	Temperature Non operational range For electronic: -40 °C ÷+105°C For USSI/F: -40 °C ÷+55°C For fluid: -100 °C ÷+65°C		EQ / T SS / A,T			
-5.8 -030	Temperature Start-up range For USSI/F (TBC): -40 °C ÷+10°C For fluid: -40 °C ÷+20°C(accumulator start-up temperature)		EQ / T SS / A,T			
-5.8 -040	Heat dissipation 104 W(of which 50 W preheating)		SS / A,T			
-5.8 -050	Mechanical Design (Primary box) Fixation point: USS02		SS / ROD SY / ROD			
-5.8 -060	Mechanical Design (Secondary box) Fixation point: USS02		SS / ROD SY / ROD			
-5.8 -070	Thermal I/F Through C02 fluid loop		SS / ROD			

Questo documento contiene informazioni di proprietà di CARLO GAVAZZI SPACE SpA. Tutti i diritti sono riservati.
All information contained in this document are property of CARLO GAVAZZI SPACE SpA. All right reserved.

Req. #	Requirement Text	RFW	Ver. Level/ Method	VERIFICATION DOCUMENT	VD Paragraph	Ver. Status
-5.9 -010	TTCS, including the TTCB and the condensers, shall weigh less than 65.9 Kg		SS / ROD, T			
6	**STAR TRACKER**					
6.1	**TEMPERATURE REFERENCE POINT**					
-6.1 -010	All the temperature requirements of the STAR TRACKER sub-detector shall refer to Temperature Reference Points (TRP). The location of the TRPs shall be defined by the equipment supplier such that their temperatures can be related to the general status of the equipment and the critical components.		SS / ROD			
6.2	**TEMPERATURE RANGES**					
-6.2 -010	The operative temperature range of the camera (CCD) shall be: from -30°C to +55°C.		EQ / T SS / A			
-6.2 -020	The best performance operative temperature range of the camera (CCD) shall be: from -30°C to +35°C.		EQ / T SS / A,T			
-6.2 -030	The non operative temperature range of the camera (CCD) shall be: from -40°C to +80°C.		EQ / T SS / A			
-6.2 -040	The operative temperature range of the electronic board shall be: from -20°C to +55°C.		EQ / T SS / A			
-6.2 -050	The non operative temperature range of the electronic board shall be: from -40°C to +80°C.		EQ / T SS / A			
-6.2 -060	The operative temperature range of the lens shall be: from –20°C to +55°C.		EQ / T SS / A			
-6.2 -070	The non operative temperature range of the lens shall be: from -40°C to +60°C		EQ / T SS / A			
-6.2 -080	Baffles temperature range shall be : from -100°C to +100°C		SS / A			
6.3	**HEAT DISSIPATION**					
-6.3 -010	Power dissipation is 3.7W for each Star Tracker (0.2W in CCD, 0.5W in CCD board, 3W in electronic boards).		SS / T			

Questo documento contiene informazioni di proprietà di CARLO GAVAZZI SPACE SpA. Tutti i diritti sono riservati.
All information contained in this document are property of CARLO GAVAZZI SPACE SpA. All right reserved.

Req. #	Requirement Text	RFW	Ver. Level/ Method	VERIFICATION DOCUMENT	VD Paragraph	Ver. Status
6.4	**MECHANICAL DESIGN**					
-6.4 -010	Baffle is mounted separately to the TRD "M" structure.		SS / ROD			
6.5	**SUB-DETECTOR THERMAL INTERFACE DESCRIPTION**					
6.5.1	**CONDUCTIVE**					
-6.5.1 -010	Copper strips are present to take power from CCD and electronics to copper braids connected to two TTCS evaporator blocks.		SS / ROD			
6.5.2	**RADIATIVE**					
-6.5.2 -010	Baffle t/o properties internal: black anodized external: silver Teflon tape 5 mils		SS / ROD, I			
-6.5.2 -020	ASTS shall be completely wrapped, by MLI. The outer layer shall be composed by Beta Cloth.		SS / ROD, I	See MLI description document (VD[1])		CLOSED.
-6.5.2 -030	Star tracker MLI shall weigh less than 0.3 Kg		EQ / T			Pending MLI ADP.
6.6	**HEAT EXCHANGE REQUIREMENTS WITH NEIGHBORING SUB-DETECTORS**					
-6.6 –0.10	Star Tracker heat rejection towards the TRD M structure shall be minimized		SS / ROD			
7	**ACC**					
7.1	**TEMPERATURE REFERENCE POINT**					
-7.1 -010	The ACC TRP is located on ACC PMTs. Their temperatures can be related to the general status of the equipment and the critical components.		EQ / ROD, S SS / ROD			
7.2	**TEMPERATURE RANGES**					
-7.2 -010	The operative temperature range of the ACC panel shall be: from -30°C to +40°C		EQ / S,T SS/ T			
-7.2 -020	The non operative temperature range of the ACC panel shall be: from -40°C to +40°C		EQ / S,T SS/ T			

Questo documento contiene informazioni di proprietà di CARLO GAVAZZI SPACE SpA. Tutti i diritti sono riservati.
All information contained in this document are property of CARLO GAVAZZI SPACE SpA. All right reserved.

Req. #	Requirement Text	RFW	Ver. Level/ Method	VERIFICATION DOCUMENT	VD Paragraph	Ver. Status
-7.2 -030	The operative temperature range of the ACC PMTs shall be: from -30°C to +45°C		EQ / S,T			
-7.2 -040	The non operative temperature range of the ACC PTMs shall be: from -35°C to +50°C		EQ / S,T			
7.3	**HEAT DISSIPATION**					
-7.3 –010	Heat dissipation of 0.05W per PMTs mounted on Vacuum Case conical flange.		SS / T			
7.4	**MECHANICAL DESIGN**					
-7.4 –010	The PMTs location is directly on the vacuum case conical flange, arranged in four couples of small boxes, two on upper conical flange and two on lower conical flange.		SS / ROD			
7.5	**SUB-DETECTOR THERMAL INTERFACE DESCRIPTION**					
7.5.1	**CONDUCTIVE**					
-7.5.1 -010	The scintillator modules are sector wise in contact with the inner wall of the VC.		SS / ROD			
-7.5.1 -020	The PMTs boxes shall be decoupled from the vacuum case with an interface conductance lower than 0.1 W/K. A conductance of 0.025 W/K have been measured with aluminum-to-aluminum contact in a vacuum test.		EQ / T SS / ROD			
7.5.2	**RADIATIVE**					
-7.5.2 -010	Outer scintillator surface is a Polyester Fabric (Trevira) with Acrylat Foam.		SS / ROD			
-7.5.2 -020	The CFC stabilizing cylinder inner surface (pointing to the tracker) will be coated with low emissivity ($\varepsilon < 0.1$) material (e.g. aluminium tape).		SS / ROD, I			
8	**ELECTRONICS**[1]					
8.1	**TEMPERATURE REFERENCE POINT**					

[1] For the Electronics section the terms EQUIPMENT and SUBSYSTEM acquire a different meaning. The EQUIPMENT is intended as the electronic assembly (e.g. PDS with all the boards included) and the SUBSYSTEM is intended as the electronic assembly integrated with the supporting/radiating structure (e.g. the crates/XPD and the radiator on which they are mounted). As an example, the CCEB shall be tested to the specified range +/- 5°C and an integrated analysis with the box mounted on the radiator shall show the specified range is met.

Questo documento contiene informazioni di proprietà di CARLO GAVAZZI SPACE SpA. Tutti i diritti sono riservati.
All information contained in this document are property of CARLO GAVAZZI SPACE SpA. All right reserved.

Req. #	Requirement Text	RFW	Ver. Level/ Method	VERIFICATION DOCUMENT	VD Paragraph	Ver. Status
-8.1 -010	All the temperature requirements of the electronics shall refer to Temperature Reference Points (TRP). The TRP is: - for the standard crates and XPD at radiator interface on the box (e.g. feet) - for the PDS on the baseplate - For HV bricks its each sub module's frame temperature. For items not specifically mentioned the TRP is any temperature of the unit, assumed isothermal.		EQ / ROD SS / ROD			
8.2	TEMPERATURE ACCEPTANCE RANGES					
-8.2 -010	Standard crates: Operational range -20°C . +50°C		EQ/ T, S SS / A	See individual standard crates test report. See Main and Tracker Thermal Analysis report , VD[18].		CLOSED.
-8.2 -020	Standard crates: Non operational range -40°C . +80°C		EQ/ T, S SS / A	See individual standard crates test report. See Main and Tracker Thermal Analysis report , VD[18].		CLOSED.
-8.2 -030	XPD: Operational range -20°C . +50°C		EQ/ T, S SS / A	See individual xPDs test report. See Main and Tracker Thermal Analysis report , VD[18].		CLOSED.
-8.2 -031	J crate: Operational range -25°C + +50°C		EQ/ T, S SS / A	See individual J-crate FM test report.		
-8.2 -032	JT crate: Operational range -25°C + +50°C		EQ/ T, S SS / A	See individual JT-crate FM test report.		

Questo documento contiene informazioni di proprietà di CARLO GAVAZZI SPACE SpA. Tutti i diritti sono riservati.
All information contained in this document are property of CARLO GAVAZZI SPACE SpA. All right reserved.

Req. #	Requirement Text	RFW	Ver. Level/ Method	VERIFICATION DOCUMENT	VD Paragraph	Ver. Status
-8.2 -033	JPD crate: Operational range -25°C ÷ +50°C		EQ/ T, S SS / A	See individual JPD-crate FM test report.		
-8.2 -040	XPD: Non operational range -40°C . +80°C		EQ/ T, S SS / A	See individual xPDs test report. See Main and Tracker Thermal Analysis report , VD[18].		
-8.2 -050	CCEB Operational range -30°C ÷ +50°C		EQ/ T SS / A	See individual CCEB test report. See Main and Tracker Thermal Analysis report , VD[18].		
-8.2 -060	CCEB Non operational range -40°C ÷ +80°C		EQ/ T SS / A	See individual CCEB test report. See Main and Tracker Thermal Analysis report , VD[18].		
-8.2 -070	PDS Operational range -25°C ÷ +48°C		EQ/ T SS / A	See Main and Tracker Thermal Analysis report , VD[18].		Pending PDS test.
-8.2 -080	PDS Non operational range -40°C ÷ +80°C		EQ/ T SS / A	See Main and Tracker Thermal Analysis report , VD[18].		Pending PDS test.

Questo documento contiene informazioni di proprietà di CARLO GAVAZZI SPACE SpA. Tutti i diritti sono riservati.
All information contained in this document are property of CARLO GAVAZZI SPACE SpA. All right reserved.

Req. #	Requirement Text	RFW	Ver. Level/ Method	VERIFICATION DOCUMENT	VD Paragraph	Ver. Status
-8.2 -90	TAS Operational range -10°C ÷ +35°C		EQ/ T SS / A			
-8.2 -100	TAS Non operational range -25°C ÷ +50°C		EQ/ T SS / A			
-8.2 220	GPS Operational range -20°C ÷ +55°C		SS / A,T			
-8.2 230	GPS Non operational range -40°C ÷ +70°C		SS / A,T			
-8.2 240	GPS antenna Operational range -70°C ÷ +70°C		EQ/ S,T SS / A			
-8.2 250	GPS antenna Non operational range -80°C ÷ +80°C		EQ/ S,T SS / A			
-8.2 260	Warm Hellum Supply Operational range -73°C ÷ +49°C		EQ/ T SS / A			
-8.2 270	Warm Helium Supply Non operational range -73°C ÷ +49°C		EQ/ T SS / A			
-8.2 280	SHV bricks Operational Range -20°C to +65°C		EQ/ T SS / A	See individual SHVs test report. See Main and Tracker Thermal Analysis report , VD[18].		
-8.2 290	SHV bricks Non Operational Range -35°C to +65°C		EQ/ T SS / A	See individual SHVs test report. See Main and Tracker Thermal Analysis report , VD[18].		
8.3	**SHORT-TERM TEMPERATURE STABILITY**					

Questo documento contiene informazioni di proprietà di CARLO GAVAZZI SPACE SpA. Tutti i diritti sono riservati.
All information contained in this document are property of CARLO GAVAZZI SPACE SpA. All right reserved.

Req. #	Requirement Text	RFW	Ver. Level/ Method	VERIFICATION DOCUMENT	VD Paragraph	Ver. Status
-8.3 -010	5°C stability on orbit period.		SS / A	See Main and Tracker Thermal Analysis report , VD[18].		
8.4	**HEAT DISSIPATION**					
8.4.1	**STANDARD ELECTRONIC UNITS (CRATES + XPD)**					
-8.4.1 -010	For all the crates and XPDs heat dissipations see RD [4] issued on April 2005		EQ/ T SY / T			
8.4.2	**NON STANDARD ELECTRONIC UNITS**					
-8.4.2 -020	PDS – 352W		EQ/ T,A SY / T			Pending test on the PDS FM. Peak power dissipation. Actual dissipation is function of the power profile supplied to AMS-02
-8.4.2 -030	TAS 4.8 mW average; 1% duty cycle (~10 seconds every ~1000 seconds)		EQ/ T			
-8.4.2 -040	Warm Helium Supply 0W		EQ/ ROD			
-8.4.2 -050	GPS 6W in operating nominal mode		EQ/ S,T			
-8.4.2 -060	HV bricks 2.8W for each ECAL HV(EHV) 2.8W for each RICH HV(RHV) 4.4W for each TOF HV (SHV)		EQ/ T SY / T			
-8.4.2 -070	CAB: see dedicated chapter.		N/A			

Questo documento contiene informazioni di proprietà di CARLO GAVAZZI SPACE SpA. Tutti i diritti sono riservati.
All information contained in this document are property of CARLO GAVAZZI SPACE SpA. All right reserved.

Req. #	Requirement Text	RFW	Ver. Level/ Method	VERIFICATION DOCUMENT	VD Paragraph	Ver. Status
8.5	MECHANICAL DESIGN : MASS AND SIZE					
8.5.1	STANDARD ELECTRONIC UNITS (CRATES + XPD)					
8.5.2	NON STANDARD ELECTRONIC UNITS					
-8.5.2 -010	CCEB Fixation point: Ram Radiator		SS / ROD	See RAM Radiator IICD VD[5]		CLOSED.
-8.5.2 -020	PDS Fixation point: Wake Radiator		SS / ROD	See WAKE Radiator ICD VD[6]		CLOSED.
-8.5.2 -030	TAS (Tracker Alignment System) Fixation point: RAM radiator Inside M-Crate (TBC) (it's an electronic board)		SS / ROD			
-8.5.2 -040	Warm Helium Supply Fixation point: –Lower support ring of the vacuum case		SY / ROD			
-8.5.2 -050	GPS Fixation point: Ram radiator		SS / ROD	See RAM Radiator IICD VD[5]		CLOSED.
-8.5.2 -060	ECAL HV bricks Fixation Point: USS lower part		SY / ROD	See VD[19].		
-8.5.2 -070	RICH HV bricks Fixation Point: USS lower part		SY / ROD	See VD[19].		
-8.5.2 -080	TOF HV bricks Fixation Point: Main radiators, flat mounted		SS / ROD	See RAM Radiator IICD VD[5] and WAKE Radiator IICD VD[6]		CLOSED.
8.6	ELECTRONIC UNITS THERMAL IF DESCRIPTION					
8.6.1	CONDUCTIVE					
-8.6.1 -010	The equivalent thermal conductance linking the main wall to the radiator as a function of the length of the crate, for each crate wall is KL= 5.75 W $K^{-1}m^{-1}$, calculated considering a contact conductance of 500 W $K^{-1}m^{-2}$		SS / ROD			
-8.6.1 -020	Cho-therm is at the CRATE/RADIATOR interface.		SS / ROD, I			
-8.6.1 -030	The contact conductance between XPD base I-frame and the radiator is: KA= 800 W $K^{-1}m^{-2}$ Thermal filler is foreseen at XPD-radiator interface. (e.g. Cho-term)		SS / ROD			

Questo documento contiene informazioni di proprietà di CARLO GAVAZZI SPACE SpA. Tutti i diritti sono riservati.
All information contained in this document are property of CARLO GAVAZZI SPACE SpA. All right reserved.

Req. #	Requirement Text	RFW	Ver. Level/ Method	VERIFICATION DOCUMENT	VD Paragraph	Ver. Status
-8.6.1 -050	ASTC: via TTCS CO2 loop, see relevant chapter.		SS / ROD			
-8.6.1 -070	PDS: Conduction to radiator		SS / ROD			
-8.6.1 -080	Warm Helium Supply: Conduction to Vacuum Case		SS / ROD			
-8.6.1 -090	GPS: Conduction to radiator with 8 fixation bolts M4.		SS / ROD			
-8.6.1 -100	ECAL HV bricks: Zirconium oxide washers to decouple from USS, direct radiation via its own radiator.		SY / ROD	See VD[19]. Section 5.3		CLOSED.
-8.6.1 -110	RICH HV bricks: Zirconium oxide washers to decouple from USS, direct radiation via its own radiator.		SY / ROD	See VD[19]. Section 5.3		CLOSED.
-8.6.1 -120	TOF HV bricks Conduction to radiator with 6 bolts #10-32		SS / ROD			
8.6.2	**RADIATIVE**					
8.6.2.1	**MLI**					
-8.6.2.1 - 010	MLI shall cover some crates walls, with external thermo optical properties as Beta Cloth (see par.) as shown in.		SS / ROD,I	See MLI description document VD[1].		
-8.6.2.1 - 020	The other crates walls shall be clear anodized (see par.).		EQ / ROD	See MLI description document VD[1] and Main and Tracker TAR (VD[18])		CLOSED.
-8.6.2.1 - 030	ECAL crates need to be white painted on their main walls and side walls		EQ / ROD,I			

Questo documento contiene informazioni di proprietà di CARLO GAVAZZI SPACE SpA. Tutti i diritti sono riservati.
All information contained in this document are property of CARLO GAVAZZI SPACE SpA. All right reserved.

Req. #	Requirement Text	RFW	Ver. Level/ Method	VERIFICATION DOCUMENT	VD Paragraph	Ver. Status
-8.6.2.1 - 040	ECAL and RICH HV bricks thermo optical properties are shown in fig 8-5 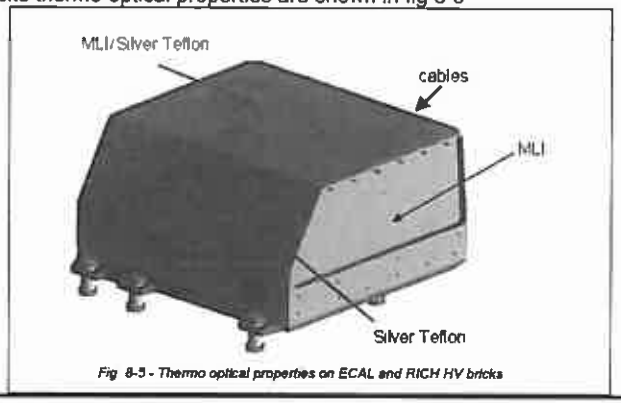 *Fig 8-5 - Thermo optical properties on ECAL and RICH HV bricks*		EQ / ROD,I			
-8.6.2.1 - 050	MLI on crates/XPDs shall weigh less than 4.1 Kg		EQ / T, ROD			
-8.6.2.1 - 060	ECAL and RICH HV bricks MLI shall weigh less than 1 Kg		EQ / T, ROD	See VD[11]. EHV and RHV MLI mass is 0,754Kg.		CLOSED.
8.6.2.2	**RADIATOR**					
-8.6.2.2 - 010	The thermo optical properties shall be white paint (see par.16).		SS / ROD,I	See VD[3].		CLOSED.
8.6.2.1	**MECHANICAL DESIGN**					
-8.6.2.2.1 - 010	Main Radiator shall be composed by a 25mm thick ROHACELL 51WF foam, with 2 aluminum face sheets on both sides 0.5mm thick.		SS / ROD	See VD[3].		
-8.6.2.2.1 - 020	RAM radiator mass (excluding thermal HW): 30.2 Kg		SS / T			
-8.6.2.2.1 - 030	RAM radiator area: 4.24 m^2		SS / T	See VD[3].		
-8.6.2.2.1 - 040	RAM radiator brackets mass: 14.9 kg		SS / T			

Questo documento contiene informazioni di proprietà di CARLO GAVAZZI SPACE SpA. Tutti i diritti sono riservati.
All information contained in this document are property of CARLO GAVAZZI SPACE SpA. All right reserved.

Req. #	Requirement Text	RFW	Ver. Level/ Method	VERIFICATION DOCUMENT	VD Paragraph	Ver. Status
-8.6.2.2.1 - 050	WAKE radiator mass (excluding thermal HW): 34.0 Kg.		SS / T			
-8.6.2.2.1 - 060	WAKE radiator area: 3.99 m^2.		SS / T	See VD[4].		
-8.6.2.2.1 - 070	WAKE radiator brackets mass: 14.9 kg.		SS / T			
8.6.2.2.2	**RADIATOR INTERFACES**					
8.6.2.2.2.1	**RADIATIVE**					
- 8.6.2.2.2.1 -010	Radiative heat exchanges to the vacuum case shall be minimized.		SS / ROD SY / I	See VD[1].		
8.6.2.2.2.2	**CONDUCTIVE**					
- 8.6.2.2.2.2 -010	The Upper Bracket conductance, connecting upper T-crates to USS02 Upper Trunnion Bridges, is shown in fig 8-6 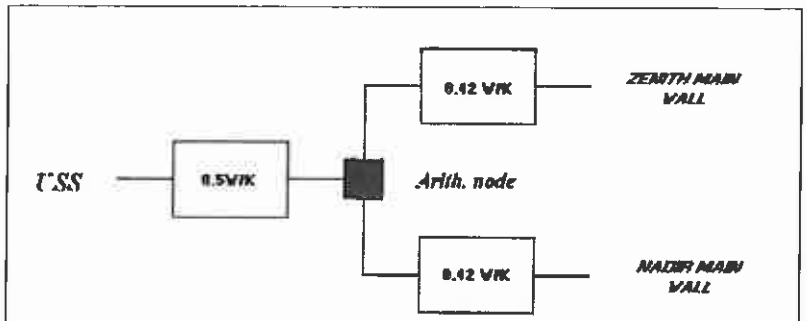 *Fig. 8-6 - Upper Bracket TMM nodalization*		SS / ROD			
- 8.6.2.2.2.2 -020	Mid Bracket conductance is 0.324 W/K, connecting TSPDs and TPDs to USS02 Lower Trunnion Bridges.		SS / ROD			

Questo documento contiene informazioni di proprietà di CARLO GAVAZZI SPACE SpA. Tutti i diritti sono riservati.
All information contained in this document are property of CARLO GAVAZZI SPACE SpA. All right reserved.

Req. #	Requirement Text	RFW	Ver. Level/ Method	VERIFICATION DOCUMENT	VD Paragraph	Ver. Status
- 8.6.2.2.2.2 -030	The Lower bracket conductance, connecting lower T-crates to USS02, is shown in fig 8-7. 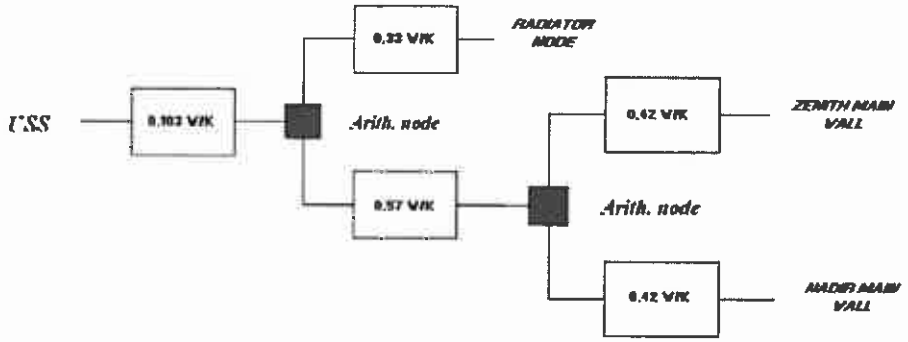 *Fig. 8-7 - Lower bracket TMM nodalization*		SS / ROD			
9	**CAB**					
9.1	**TEMPERATURE REFERENCE POINT**					
-9.1 -010	All the temperature requirements of the CAB shall refer to Temperature Reference Points (TRP). The location of the main TRP is: • in correspondence to Node 201 in ramp-up mode, and In correspondence to Node 219 in steady state mode.		EQ / ROD SS / ROD			
9.2	**TEMPERATURE RANGES**					

Questo documento contiene informazioni di proprietà di CARLO GAVAZZI SPACE SpA. Tutti i diritti sono riservati.
All information contained in this document are property of CARLO GAVAZZI SPACE SpA. All right reserved.

Req. #	Requirement Text	RFW	Ver. Level/ Method	VERIFICATION DOCUMENT	VD Paragraph	Ver. Status
-9.2 -010	Operative CAB rear side temperature (WAKE facing side) during the NOMINAL MONITORING mode under the worst cold and hot design cases shall be within the range:		EQ / A,T SS / A	A/ See CAB TAR (VD[22])		

Node	Module	Min °C	Max °C
301	CCS CS 1	-25	45
302	CCS CS 2	-25	45
303	CCS CS 3	-25	44
304	CCS CS 4	-25	44
305	CCS CS 5	-25	44
306	CCS CS 6	-25	44
307	CCS CTRL TMTC	-25	45
308	28V ISO	-25	45
309	CCSC STM (Nom)	-25	46
310	PTM (Nom)	-25	46
311	PTM (Red)	-25	46
312	CCSC STM (Red)	-25	47
313	PS (Nom)	-25	47
314	PS (Red)	-25	46
315	CSP PWR DRV (Nom)	-25	46
316	CSP PWR DRV (Red)	-25	46
317	CSP TM/TC (Nom / Red	-25	46
318	CSP CL DET & CV	-25	46
319	CSP MAG DET & CV	-25	46

Questo documento contiene informazioni di proprietà di CARLO GAVAZZI SPACE SpA. Tutti i diritti sono riservati.
All information contained in this document are property of CARLO GAVAZZI SPACE SpA. All right reserved.

Req. #	Requirement Text	RFW	Ver. Level/ Method	VERIFICATION DOCUMENT	VD Paragraph	Ver. Status
-9.2 -020	Operative CAB baseplate side temperature (Starboard facing side) during the NOMINAL MONITORING mode under the worst cold and hot design cases shall be within the range:		EQ / A,T SS / A	A/ See CAB TAR (VD[22])		

Node	Module	Min °C	Max °C
201	CCS CS 1	-25	44
202	CCS CS 2	-25	44
203	CCS CS 3	-25	43
204	CCS CS 4	-25	41
205	CCS CS 5	-25	40
206	CCS CS 6	-25	40
207	CCS CTRL TMTC	-25	40
208	28V ISO	-25	40
209	CCSC STM (Nom)	-25	41
210	PTM (Nom)	-25	44
211	PTM (Red)	-25	47
212	CCSC STM (Red)	-25	48
213	PS (Nom)	-25	49
214	PS (Red)	-25	50
215	CSP PWR DRV (Nom)	-25	50
216	CSP PWR DRV (Red)	-25	50
217	CSP TM/TC (Nom / Red)	-25	50
218	CSP CL DET & CV	-25	51
219	CSP MAG DET & CV	-25	51

Questo documento contiene informazioni di proprietà di CARLO GAVAZZI SPACE SpA. Tutti i diritti sono riservati.
All information contained in this document are property of CARLO GAVAZZI SPACE SpA. All right reserved.

Req. #	Requirement Text	RFW	Ver. Level/ Method	VERIFICATION DOCUMENT	VD Paragraph	Ver. Status
-9.2 -030	The CAB shall demonstrate ability to properly function in the above TRPs operating ranges during NOMINAL MODE.		EQ / A,T SS / A	A/ See CAB TAR (VD[22])		

Questo documento contiene informazioni di proprietà di CARLO GAVAZZI SPACE SpA. Tutti i diritti sono riservati.
All information contained in this document are property of CARLO GAVAZZI SPACE SpA. All right reserved.

Req. #	Requirement Text	RFW	Ver. Level/ Method	VERIFICATION DOCUMENT	VD Paragraph	Ver. Status
-9.2 -040	CAB rear side (WAKE facing) temperature in RAMP-UP NOMINAL mode at the end of 15 minutes stabilization time under the worst cold and hot[2] design cases shall be within the range :		EQ / A,T SS / A	A/ See CAB CRISA TAR (VD[22]) A/ See CAB CGS TAR (VD[23])		CLOSED.

Node	Module	Min °C	Max °C
301	CCS CS 1	-25	57
302	CCS CS 2	-25	56
303	CCS CS 3	-25	55
304	CCS CS 4	-25	54
305	CCS CS 5	-25	54
306	CCS CS 6	-25	53
307	CCS CTRL TM	-25	51
308	28V ISO	-25	50
309	CCSC STM (Nom)	-25	50
310	PTM (Nom)	-25	50
311	PTM (Red)	-25	50
312	CCSC STM (Red)	-25	50
313	PS (Nom)	-25	50
314	PS (Red)	-25	50
315	CSP PWR DRV (Nom)	-25	51
316	CSP PWR DRV (Red)	-25	51
317	CSP TM/TC (Nom / Red)	-25	50
318	CSP CL DET & CV	-25	51
319	CSP MAG DET & CV	-25	51

[2] CAB cannot perform ramp-up in extreme beta angles under hot environment conditions (Beta = -75°). Therefore ramp up hot design case is Beta = -50° and the ISS attitude is Y,P,R = 0,0,0. This attitude is almost equivalent to the Torque Equilibrium Attitude (TEA), and can be considered the most probable during flight.

Questo documento contiene informazioni di proprietà di CARLO GAVAZZI SPACE SpA. Tutti i diritti sono riservati.
All information contained in this document are property of CARLO GAVAZZI SPACE SpA. All right reserved.

Req. #	Requirement Text	RFW	Ver. Level/ Method	VERIFICATION DOCUMENT	VD Paragraph	Ver. Status
-9.2 -050	CAB baseplate (Starboard facing) temperature in RAMP-UP NOMINAL mode at the end of 15 minutes stabilization time under the worst cold and hot design cases shall be within the range :		EQ / A,T SS / A	A/ See CAB CRISA TAR (VD[22]) A/ See CAB CGS TAR (VD[23])		CLOSED.
-9.2 -060	The CAB shall demonstrate ability to properly function in the above TRPs operating ranges during RAMP-UP NOMINAL MODE (15 minutes) .		EQ / A,T SS / A	Ask Guillermo		

Node	Module	Min °C	Max °C
201	CCS CS 1	-25	61
202	CCS CS 2	-25	61
203	CCS CS 3	-25	58
204	CCS CS 4	-25	49
205	CCS CS 5	-25	46
206	CCS CS 6	-25	45
207	CCS CTRL TMTC	-25	41
208	28V ISO	-25	39
209	CCSC STM (Nom)	-25	40
210	PTM (Nom)	-25	44
211	PTM (Red)	-25	47
212	CCSC STM (Red)	-25	49
213	PS (Nom)	-25	50
214	PS (Red)	-25	50
215	CSP PWR DRV (Nom)	-25	51
216	CSP PWR DRV (Red)	-25	51
217	CSP TM/TC (Nom / Red)	-25	51
218	CSP CL DET & CV	-25	52
219	CSP MAG DET & CV	-25	52

Questo documento contiene informazioni di proprietà di CARLO GAVAZZI SPACE SpA. Tutti i diritti sono riservati.
All information contained in this document are property of CARLO GAVAZZI SPACE SpA. All right reserved.

Req. #	Requirement Text	RFW	Ver. Level/ Method	VERIFICATION DOCUMENT	VD Paragraph	Ver. Status
-9.2 -100	Non operative CAB rear side temperature (WAKE facing side) under the worst cold and hot design cases shall be within the range :		EQ / A,T SS / A	A/ See CAB CRISA TAR (VD[22]) A/ See CAB CGS TAR (VD[23])—	See Section 7.5.	

Node	Module	Min °C	Max °C
301	CCS CS 1	-30	70
302	CCS CS 2	-30	70
303	CCS CS 3	-30	70
304	CCS CS 4	-30	70
305	CCS CS 5	-30	70
306	CCS CS 6	-30	70
307	CCS CTRL TMTC	-30	70
308	28V ISO	-30	70
309	CCSC STM (Nom)	-30	70
310	PTM (Nom)	-30	70
311	PTM (Red)	-30	70
312	CCSC STM (Red)	-30	70
313	PS (Nom)	-30	70
314	PS (Red)	-30	70
315	CSP PWR DRV (Nom)	-30	70
316	CSP PWR DRV (Red)	-30	70
317	CSP TM/TC (Nom / Red)	-30	70
318	CSP CL DET & CV	-30	70
319	CSP MAG DET & CV	-30	70

Questo documento contiene informazioni di proprietà di CARLO GAVAZZI SPACE SpA. Tutti i diritti sono riservati.
All information contained in this document are property of CARLO GAVAZZI SPACE SpA. All right reserved.

Req. #	Requirement Text	RFW	Ver. Level/ Method	VERIFICATION DOCUMENT	VD Paragraph	Ver. Status
-9.2 -110	Non operative CAB baseplate temperature (Starboard facing side) under the worst cold and hot design cases shall be within the range:		EQ / A,T SS / A	A/ See CAB CRISA TAR (VD[22]) A/ See CAB CGS TAR (VD[23])	See Section 7.5	

Node	Module	Min °C	Max °C
201	CCS CS 1	-30	70
202	CCS CS 2	-30	70
203	CCS CS 3	-30	70
204	CCS CS 4	-30	70
205	CCS CS 5	-30	70
206	CCS CS 6	-30	70
207	CCS CTRL TMTC	-30	70
208	28V ISO	-30	70
209	CCSC STM (Nom)	-30	70
210	PTM (Nom)	-30	70
211	PTM (Red)	-30	70
212	CCSC STM (Red)	-30	70
213	PS (Nom)	-30	70
214	PS (Red)	-30	70
215	CSP PWR DRV (Nom)	-30	70
216	CSP PWR DRV (Red)	-30	70
217	CSP TM/TC (Nom / Red)	-30	70
218	CSP CL DET & CV	-30	70
219	CSP MAG DET & CV	-30	70

Questo documento contiene informazioni di proprietà di CARLO GAVAZZI SPACE SpA. Tutti i diritti sono riservati.
All information contained in this document are property of CARLO GAVAZZI SPACE SpA. All right reserved.

Req. #	Requirement Text	RFW	Ver. Level/ Method	VERIFICATION DOCUMENT	VD Paragraph	Ver. Status
-9.2 -130	The minimum switch-on temperature for CAB shall be -25°C		EQ / T SS / A	A/ See CAB CGS TAR (VD[23])	See section 7.4	
9.3	**HEATERS**					
-9.3 -010	CAB heaters shall consume maximum 100W at 113V.		SS / ROD	ROD/ See CAB CGS TAR (VD[23])	See section 7.4	
-9.3 -020	CAB heaters shall be sized in order to bring the CAB TRPs to -25°C under the worst cold conditions.		EQ / A,T SS / A,T	A/ See CAB CGS TAR (VD[23])	See section 7.4	
9.4	**HEAT DISSIPATION**					

Questo documento contiene informazioni di proprietà di CARLO GAVAZZI SPACE SpA. Tutti i diritti sono riservati.
All information contained in this document are property of CARLO GAVAZZI SPACE SpA. All right reserved.

Req. #	Requirement Text	RFW	Ver. Level/ Method	VERIFICATION DOCUMENT	VD Paragraph	Ver. Status
-9.4 -010			EQ / T SY / T	T/ system test pending		

	CSP ON	CSP OFF
COLD REDUNDANCY		
Minimum	42.1 W	21.1 W
Typical	69.8 W	35 W
Maximum	80.8 W	-
HOT REDUNDANCY		
Typical	88.8 W	-
Maximum	102.3 W	-

During Ramp-up dissipation is given by fig 9-1 if 6 modules are working[3]

For information, not for sizing purposes: Ramp-up dissipation is given by fig 9-2 if 5 modules are working

During Ramp-down dissipation is given by fig 9-3.

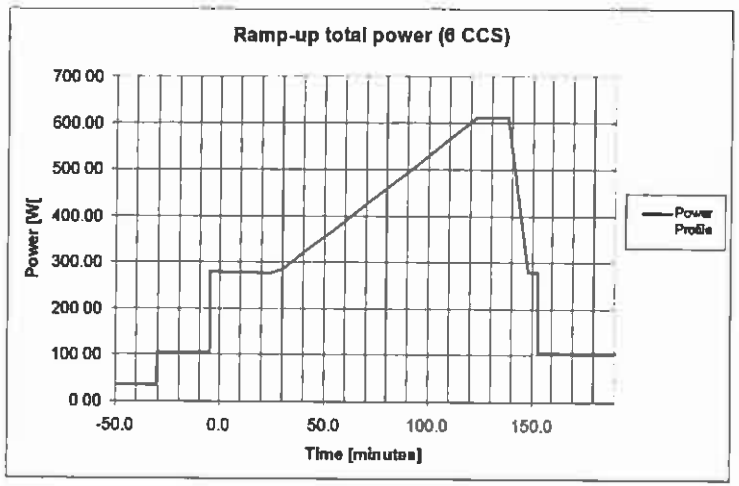

Fig 9-1- Power in shunt, Magnet wires and 6 CCS-CS module for Ramp-up condition.

Questo documento contiene informazioni di proprietà di CARLO GAVAZZI SPACE SpA. Tutti i diritti sono riservati.
All information contained in this document are property of CARLO GAVAZZI SPACE SpA. All right reserved.

Req. #	Requirement Text	RFW	Ver. Level/ Method	VERIFICATION DOCUMENT	VD Paragraph	Ver. Status
9.5	**MECHANICAL DESIGN**					
-9.5 -010	CAB is supported by USS02 through 26 NAS1351 screws and two reinforcement beams.		SY / ROD	ROD/ See VD[7].		
-9.5 -020	TCS weight shall be less than 4.2Kg		SS / ROD			Not build yet.
9.6	**SUB-DETECTOR THERMAL I/F DESCRIPTION**					
9.6.1	**CONDUCTIVE**					
-9.6.1 -010	Contact area between CAB base plate and USS upper trunnion is filled with appropriate thermal filler (e.g. Sigraflex).		SS / ROD SY / I	ROD/ See (CAB TCS INSTALLATION ASSEMBLY)		I / PENDING CAB FM INSTALLATION
-9.6.1 -020	I/F conductance (CAB baseplate to USS Upper Trunnion) value shall be larger than 32W/K[4]		SS / ROD	ROD/		
-9.6.1 -030	Conductance between CAB and USS lower Trunnion is zero (no physical connection).		SY / ROD	ROD/ See CAB CGS TAR (VD[23])	See section 6.1.1.2	
-9.6.1 -040	CAB is sunk to two LHPs that in turn are sunk to wake radiator.		SS / ROD, I			
-9.6.1 -045	I/F conductance (CAB baseplate to each LHP saddle) value shall be larger than 13 W/K [5]		SS / ROD	ROD/ See CAB CGS TAR (VD[23])	See section 6.1.1.2	
-9.6.1 -050	I/F of LHP condenser and radiator is given in Fig 9-5 and is realized gluing the LHP and then riveting it.		SS / ROD, I			I pending the CAB LHP assembly
-9.6.1 -060	I/F of LHP evaporator and CAB is given in Fig 9-6 with appropriate thermal filler (e.g. cho-therm).		SS / ROD, I			I pending the instalaltion of the CAB LHP onto CAB
-9.6.1 -070	Conductive link between the CAB and the Vacuum Case via the current leads is 0.38W/K.		EQ / ROD			

[3] Source: email from CRISA, 11/Feb/2008
[4] The assumed specific contact conductance is 500 W/m^2K
[5] The assumed specific contact conductance is 1000 W/m^2K

Questo documento contiene informazioni di proprietà di CARLO GAVAZZI SPACE SpA. Tutti i diritti sono riservati.
All information contained in this document are property of CARLO GAVAZZI SPACE SpA. All right reserved.

Req. #	Requirement Text	RFW	Ver. Level/ Method	VERIFICATION DOCUMENT	VD Paragraph	Ver. Status
-9.6.1 -080	Two axial grooved heat pipes are mounted along the CAB height, on the wake side and on the top cover, to homogenize the temperature across the modules.		SS / ROD, I			
-9.6.1 -090	Three axial grooved heat pipes are interconnecting the USS upper Trunnion bridge and the VC I/F Joint.		SY / ROD, I			
9.6.2	**RADIATIVE**					
-9.6.2 -010	Radiative area on the CAB itself is roughly 0.75 m^2.		EQ / ROD,T			
-9.6.2 -020	CAB walls thermo-optical properties is silver Teflon 5mils (see par. 16).		EQ / I			I pending the tape installation on the CAB
-9.6.2 -030	CAB LHP tubes are insulated by MLI		SS / ROD	SS/ See MLI description document VD[1].		
-9.6.2 -040	CAB MLI shall weigh less than 1.4 Kg		EQ / T			T pending the CAB MLI ADP delivery
10	**MAGNET/VACUUM CASE**					
10.1	**TEMPERATURE REFERENCE POINT**					
-10.1 -010	All the temperature requirements of the VC shall refer to Temperature Reference Points (TRP). Reference temperature for VC is temperature weighted average over area.		EQ / ROD,S SS / ROD			
10.2	**TEMPERATURE REFERENCE POINT**					
-10.2 -010	The vacuum case external temperature shall be as low as possible and the design goal is to have it (in average) colder than 10°C.		SS / A SY / A			
10.3	**HEAT DISSIPATION**					
-10.3 -010	See cryocoolers. No direct power dissipation is taking place in the vacuum case, it is assumed adiabatic.		SS / ROD			
10.4	**SUB-DETECTOR THERMAL I/F DESCRIPTION**					
10.4.1	**CONDUCTIVE**					

Questo documento contiene informazioni di proprietà di CARLO GAVAZZI SPACE SpA. Tutti I diritti sono riservati.
All information contained in this document are property of CARLO GAVAZZI SPACE SpA. All right reserved.

Req. #	Requirement Text	RFW	Ver. Level/ Method	VERIFICATION DOCUMENT	VD Paragraph	Ver. Status
-10.4.1 - 010	The vacuum case has a mechanical interface to the USS at 8 points (4 on the upper support flange, 4 on the lower support flange), each of them having a value of 57 W/K.		SS / ROD			
10.4.2	**RADIATIVE**					
10.4.2.1	**MLI**					
-10.4.2.1 - 010	The Outer Vacuum Case (VC) shell on ± Y quadrants (towards crates) will be covered with MLI. Its external t/o properties are Beta Cloth (see par. 16)		SS / ROD,I	ROD / See MLI description document (VD[1]) and MLI drawings (VD[12])		I pending the MLI installation
-10.4.2.1 - 020	MLI is foreseen between upper support ring and TRD (also called the 'skirt MLI'). Its external t/o properties are Beta Cloth (see par.16)		SS / ROD,I	ROD / See MLI description document (VD[1]) and MLI ADP		I pending the MLI installation
-10.4.2.1 - 030	MLI is foreseen on the upper and lower support rings. Its external t/o properties are Beta Cloth (see par.16)		SS / ROD,I	ROD / See MLI description document (VD[1]) and MLI ADP		I pending the MLI installation
-10.4.2.1 - 040	VACUUM CASE CONICAL FLANGES MLI: MLI blanket is foreseen ONLY on the outermost band of the lower conical flange of the vacuum case.		SS / ROD,I	ROD / See MLI description document (VD[1]) and MLI ADP		I pending the MLI installation
-10.4.2.1 - 050	Vacuum case MLI shall weigh less than 5.7 Kg (broken down into: 1.5 Kg per each ring and 2.7 Kg for the RAM/WAKE surfaces)		EQ / T			T pending the MLI ADP
-10.4.2.1 - 060	"Skirt MLI" defined above shall weigh less than 1.9 Kg		EQ / T			T pending the MLI ADP
-10.4.2.1 - 070	The vacuum case lower conical flange MLI shall weigh less than 2.4 Kg		EQ / T			T pending the MLI ADP
10.4.2.2	**OTHER SURFACES**					
-10.4.2.2 - 010	The Outer Vacuum Case shell on ± X quadrants will be covered with Silver Teflon including the Ribs as far as pratical.		SS / ROD,I			I pending the arrival of the Flight VC

Questo documento contiene informazioni di proprietà di CARLO GAVAZZI SPACE SpA. Tutti i diritti sono riservati.
All information contained in this document are property of CARLO GAVAZZI SPACE SpA. All right reserved.

Req. #	Requirement Text	RFW	Ver. Level/ Method	VERIFICATION DOCUMENT	VD Paragraph	Ver. Status
-10.4.2.2 - 020	All other surfaces will be clear anodized aluminum (see par. 16**Errore. L'origine riferimento non è stata trovata.**).		SS / ROD,I			
-10.4.2.2 - 030	Silvered Teflon weight is defined all-together in the USS silvered Teflon.		T			
10.5	**PILOT VALVE VACUUM VESSEL**					
-10.5 -010	Temperature Operational range -10°C ÷ +60°C		EQ / S,T SS / A			No test foreseen. Only manufacturer recommendations.
-10.5 -020	Temperature Non operational range -40°C ÷ +80°C		EQ / S,T SS / A			No test foreseen. Only manufacturer recommendations.
-10.5 -030	Heat Dissipation: 0.022 W minimum heat load, 1.2 W maximum heat load.		SS / T			No test foreseen.
-10.5 -040	Mechanical Design Fixation point: located on the lower support ring of the vacuum case		SS / ROD	See PVVV assembly drawing (VD[45])		CLOSED.
-10.5 -050	Thermal I/F to the fixation point (W/K): Aluminum brackets 271 kW/m		SS / ROD			Mechanical interface under review.
10.6	**CDD**					
-10.6 -010	Temperature Operational range -65°C ÷ +200°C		EQ / S,T			A tighter requirement is given by system level constraints: USS-02 max temperature!!
-10.6 -020	Temperature Non operational range -65°C ÷ +200°C		EQ / S,T			

Questo documento contiene informazioni di proprietà di CARLO GAVAZZI SPACE SpA. Tutti i diritti sono riservati.
All information contained in this document are property of CARLO GAVAZZI SPACE SpA. All right reserved.

Req. #	Requirement Text	RFW	Ver. Level/ Method	VERIFICATION DOCUMENT	VD Paragraph	Ver. Status
-10.6 -030	Heat Dissipation See Fig. 10-3 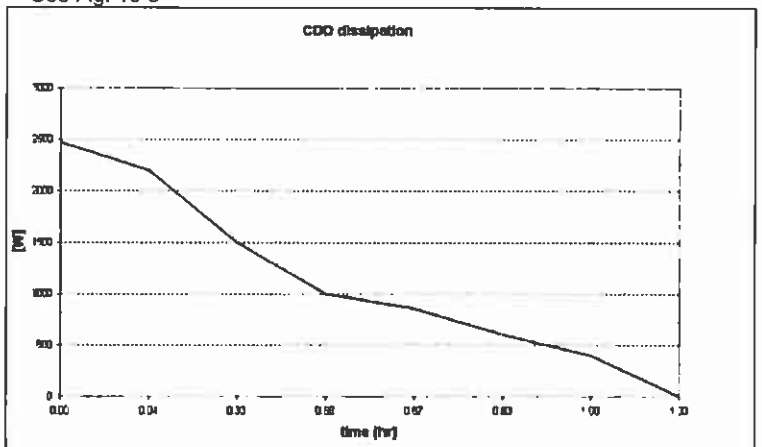 *Fig. 10-3 – Heat dissipated by dump diodes during magnet discharge*		EQ / T SS / T			
-10.6 -040	Fixation point: USS02, sill trunnion joints (wake)		SY / ROD			
-10.6 -050	Thermal I/F Conduction to USS02		SY / ROD			Type of thermal filler TBD
10.7	UPS					
-10.7 -010	Temperature Operational range (magnet charged) -25°C to +50°C		EQ / S,T SS / A			
-10.7 -020	Temperature Non operational range (magnet uncharged) -40°C to +50°C		EQ / S,T SS / A			

Questo documento contiene informazioni di proprietà di CARLO GAVAZZI SPACE SpA. Tutti i diritti sono riservati.
All information contained in this document are property of CARLO GAVAZZI SPACE SpA. All right reserved.

Req. #	Requirement Text	RFW	Ver. Level/ Method	VERIFICATION DOCUMENT	VD Paragraph	Ver. Status
-10.7 -030	Heat Dissipation 2-5 W average, 10W max		EQ / T SY/ T			
-10.7 -040	Fixation point: USS02: Vacuum case joint, wake -X		SY/ ROD			
-10.7 -050	Thermal I/F Conduction to USS02		SY/ ROD			
-10.7 060	UPS MLI shall weigh less than 0.4 Kg		EQ / T			
11	**CRYO-COOLERS**					
11.1	**TEMPERATURE REFERENCE POINT**					
-11.1 -010	All the temperature requirements of the cryocoolers shall refer to Temperature Reference Points (TRP). The location of the TRPs is on the heat rejection collar.		EQ / ROD,S SS / ROD			
11.2	**TEMPERATURE RANGES**					
-11.2 -010	The minimum storage temperature shall be: -40°C.		EQ / S,T SS / A			
-11.2 -020	The minimum turn on mode shall be: -20 °C.		EQ / S,T SS / A			
-11.2 -030	The steady-state operating mode temperature range shall be: from -20 °C to +40 °C		EQ / S,T SS / A			
11.3	**HEAT DISSIPATION**					
-11.3 -010	Heat dissipation of each cryocooler Is: Minimum: 60 Watts + heat lift Maximum: 150 Watts + heat lift Nominal for design: 100 Watts + lift heat lift determined by calculation heat lift is a function of power, reject temperature and cold tip temperature		EQ / S,T SY / T			

Questo documento contiene informazioni di proprietà di CARLO GAVAZZI SPACE SpA. Tutti i diritti sono riservati.
All information contained in this document are property of CARLO GAVAZZI SPACE SpA. All right reserved.

Req. #	Requirement Text	RFW	Ver. Level/ Method	VERIFICATION DOCUMENT	VD Paragraph	Ver. Status
11.4	**SUB-DETECTOR THERMAL INTERFACE DESCRIPTION**					
11.4.1	**CONDUCTIVE**					
-11.4.1-010	Each cryocoolers operational nominal power (see par. **Errore. L'origine riferimento non è stata trovata.**) is sunk to direct condensing radiators by means of LHP.		SS / ROD			
-11.4.1-020	The thermal conductance between the collar and each LHP evaporator should be maximized. It must be larger than 5W/K for each of the two LHPs (measured on QM with Indium foil I/F filler is 5.5W/K).		SS / ROD,T			
-11.4.1-030	The LHP evaporators (2 for each cryo) will bring the heat power to its own radiator.		SS / ROD			
-11.4.1-031	Each LHP is equipped with a bypass valve with set point -20°C		EQ / T SS / ROD			
-11.4.1-040	Two LHP are foreseen for each cryocooler		SS / ROD			
-11.4.1-050	A thermal de-coupling between the Cryocoolers and the vacuum case shall be obtained by means of brackets, with a total mounting conductance lower than 0.01W/K		EQ / ROD,T			
-11.4.1-060	Conductance between cold tip and cryocooler body is shown in **Errore. L'origine riferimento non è stata trovata..**		EQ / T			
-11.4.1-070	The 2 lower Cryocoolers LHP are mechanically supported by dedicated CFRP beams. One of these two beams is shared with TTCS tubing		SS / ROD			
-11.4.1-080	The two CFRP beams shall weigh 5 kg in total		EQ / T			
11.4.2	**RADIATIVE**					
11.4.2.1	**MLI**					
-11.4.2.1-010	Each Cryocooler will be thermally insulated from the environment, by means of a suitable MLI blanket.		SS / ROD SY / I			
-11.4.2.1-020	Cryocooler MLI and LHP MLI shall weigh in total less than 0.6 Kg		EQ / T			
12	**CRYO COOLER ZENITH RADIATOR**					

Questo documento contiene informazioni di proprietà di CARLO GAVAZZI SPACE SpA. Tutti i diritti sono riservati.
All information contained in this document are property of CARLO GAVAZZI SPACE SpA. All right reserved.

Req. #	Requirement Text	RFW	Ver. Level/ Method	VERIFICATION DOCUMENT	VD Paragraph	Ver. Status
12.1	**TEMPERATURE REFERENCE POINT**					
-12.1- 010	All the temperature requirements of the ZENITH RADIATOR shall refer to Temperature Reference Points (TRP). The TRP for Zenith radiator is located at fluid inlet and outlet interface.		EQ / ROD,S SS / ROD			
12.2	**TEMPERATURE RANGES**					
-12.2- 010	working fluid freezing temperature -189°C (propylene)		EQ / ROD			
-12.2- 020	Max working fluid temperature +40°C (TBC by TCS Team)		SS / A			
12.3	**MECHANICAL DESIGN**					
-12.3- 010	The (four) cryocoolers radiators are located on top of TRD and their surface has an octagonal shape, divided into four pieces.		SS / ROD			
-12.3- 020	Zenith total cryocoolers Radiator: Total area: 4.85 m^2.		SS / ROD,T			
-12.3- 030	Zenith total cryocoolers Radiator: Total Mass: 43.5 Kg, including brackets and LHP piping.		SS / T			
-12.3- 040	Cross section of the fluid pipes is 4mm OD, 3mm ID.		SS / ROD			
-12.3- 050	The X0 (radiator length in %) profile of the section of the radiator is presented in **Errore. L'origine riferimento non è stata trovata.** with the following thickness values: • 1.6 mm top Aluminum skin • 10 mm Rohacell 51WF • 0.3 mm low Aluminum skin		SS / ROD,A			
12.4	**SUB-DETECTOR THERMAL INTERFACE DESCRIPTION**					
12.4.1	**CONDUCTIVE**					
-12.4.1- 010	The radiator are fixed to TRD upper honeycomb panel by means of brackets and spokes.		SY / ROD			
-12.4.1- 020	Conductances for each Z-bracket shall be lower than: 0.01 W/K		SS / ROD			

Questo documento contiene informazioni di proprietà di CARLO GAVAZZI SPACE SpA. Tutti i diritti sono riservati.
All information contained in this document are property of CARLO GAVAZZI SPACE SpA. All right reserved.

Req. #	Requirement Text	RFW	Ver. Level/ Method	VERIFICATION DOCUMENT	VD Paragraph	Ver. Status
-12.4.1-030	Conductances for each spoke shall be lower than: 0.001 W/K		SS / ROD			
-12.4.1-040	Conductances for each bracket shall be lower than: 0.1 W/K		SS / ROD			
12.4.2	**RADIATIVE**					
-12.4.2-010	The radiator shall be designed in such a way to minimize the heat radiation on the backside.		SS / ROD			
-12.4.2-030	Outer (+ Z pointing) surfaces thermo optical properties shall be silvered teflon 5 mils (see par. **Errore. L'origine riferimento non è stata trovata.**).		SS / ROD,I			
13	**LOWER TOF**					
13.1	**TEMPERATURE REFERENCE POINT**					
-13.1- 010	All the temperature requirements of the lower TOF sub-detector shall refer to Temperature Reference Points (TRP). The location of the TRPs is at PMT level, one per side of the TOF, relevant to the MT in mid location. Hence, totally 4 TRPs are foreseen.		EQ / ROD,S SS / ROD			
13.2	**TEMPERATURE RANGES**					
-13.2- 010	The operative temperature range shall be: from -30 °C to +45 °C on the PMT, which corresponds to -32°C to +43°C on the accessible location for the Dallas sensors.		EQ / T,S SS / A,T SY / A			
-13.2- 020	The non operative temperature range shall be: from -35 °C to +50°C.		EQ / T,S SS / A,T SY / A			
13.3	**SHORT-TERM TEMPERATURE STABILITY**					
-13.3- 010	The peak-to-peak temperature variation along one orbit shall be within 5°C.		SS / A			
13.4	**TEMPERATURE GRADIENTS**					
-13.4- 010	The spatial temperature gradient between the TOF structure (carbon fiber box) and the PMTs shall not exceed 10°C.		SS / A,T SY / A			

Questo documento contiene informazioni di proprietà di CARLO GAVAZZI SPACE SpA. Tutti i diritti sono riservati.
All information contained in this document are property of CARLO GAVAZZI SPACE SpA. All right reserved.

Req. #	Requirement Text	RFW	Ver. Level/ Method	VERIFICATION DOCUMENT	VD Paragraph	Ver. Status
13.5	HEAT DISSIPATION					
-13.5- 010	3.29W are dissipated on the 76 PMTs, 0.130 W are dissipated on the 4 SFEC boards, for a total of 0.52 W. The total heat dissipated is then 3.8W		EQ / T SS / T			
13.6	MECHANICAL DESIGN					
-13.6- 010	A carbon fiber box is used to encapsulate the PMTs.		SS / ROD			
13.7	SUB-DETECTOT THERMAL IF DESCRIPTION					
13.7.1	CONDUCTIVE					
-13.7.1- 010	The PMT are thermally decoupled from the structure.		SS / ROD			
-13.7.1- 020	A value of conductance lower than 1W/K is obtained on attachment rods.		SS / ROD SY / ROD			
13.7.2	RADIATIVE					
-13.7.2- 010	The TOF PMT boxes are completely surrounded by MLI Its external t/o properties shall be Beta Cloth.		SS / ROD			
-13.7.2- 020	TOF MLI shall weigh less than 12.8 Kg		EQ / T			
14	RICH					
14.1	TEMPERATURE REFERENCE POINT					
-14.1- 010	All the temperature requirements of the RICH sub-detector shall refer to Temperature Reference Points (TRP). RICH TRPs are the 8 mid-points of the main RICH structure.		EQ / ROD,S SS / ROD			
14.2	TEMPERATURE RANGES					
-14.2- 010	The PMTs operative temperature range shall be: from -30 °C to +50°C.		EQ / T,S SS / A			

Questo documento contiene informazioni di proprietà di CARLO GAVAZZI SPACE SpA. Tutti i diritti sono riservati.
All information contained in this document are property of CARLO GAVAZZI SPACE SpA. All right reserved.

Req. #	Requirement Text	RFW	Ver. Level/ Method	VERIFICATION DOCUMENT	VD Paragraph	Ver. Status
-14.2- 020	ThePMTs non operative temperature range shall be: from -35°C(TBC by test results) to +60°C.		EQ / T,S SS / A			
-14.2- 030	The electronic boards operative temperature range shall be: from -40 °C to +85°C.		EQ / T SS / A			
-14.2- 040	The electronic boards non operative temperature range shall be: from -55 °C to +125°C.		EQ / T SS / A			
14.3	**TEMPERATURE GRADIENTS**					
-14.3- 010	Temperature uniformity among the PMTs of different grids shall be 15°C		SS / A,T			
-14.3- 020	Temperature uniformity among the PMTs of the same grids shall be 6°C		SS / A,T			
14.4	**HEAT DISSIPATION**					
-14.4- 010	The RICH PMTs dissipation is 20.4W (dissipated on 680 PMT, 30 mW each).		EQ / T SS / T SY / T			
-14.4- 020	Additional 29.5 W shall be dissipated on the PCB around the octagonal structure.		SS / T SY / T			
14.5	**SUB-DETECTOR THERMAL I/F DISSIPATION**					
14.5.1	**CONDUCTIVE**					
-14.5.1- 010	RICH is coupled to the USS with a conductance larger than 1.5 W/K on each one of the 8 fixation points.		SS / ROD			
14.5.2	**RADIATIVE**					
14.5.2.1	**MLI**					
-14.5.2.1- 010	RICH is completely surrounded by TOF MLI.		SS / ROD			Refer to TOF MLI
14.6	**HEAT EXCHANGE REQUIREMENTS WITH NEIGHBORING EXPERIMENTS**					

Questo documento contiene informazioni di proprietà di CARLO GAVAZZI SPACE SpA. Tutti i diritti sono riservati.
All information contained in this document are property of CARLO GAVAZZI SPACE SpA. All right reserved.

Req. #	Requirement Text	RFW	Ver. Level/ Method	VERIFICATION DOCUMENT	VD Paragraph	Ver. Status
-14.6- 010	RICH heat rejection in the ECAL direction shall be minimized.		SS / ROD			
15	**ECAL**					
15.1	**TEMPERATURE REFERENCE POINT**					
-15.1- 010	All the temperature requirements of the ECAL sub-detector shall refer to Temperature Reference Points (TRP). The location of the TRP is on ECAL PMTs end caps, one per each side.		EQ / ROD,S SY / ROD			
15.2	**TEMPERATURE RANGES**					
-15.2 -010	The operative temperature range shall be: from -20 °C to +40°C.		SS / A,T			
-15.2 -020	The non operative temperature range shall be: from -30 °C to +50°C.(see AD 3 minute of ECAL)		SS / A,T			
15.3	**SHORT-TERM TEMPERATURE STABILITY**					
-15.3 -010	5°C over an orbit period[6].		SS / A			
15.4	**TEMPERATURE GRADIENTS**					
-15.4 -010	Uniformity between pancake (LEAD) and aluminum structure in order to avoid thermal induced stresses is requested. Up to 10°C of temperature difference are allowed.		SS / A,T SY / T			
15.5	**HEAT DISSIPATION**					
-15.5 -010	49.6 W are dissipated on the 324 PMTs, 17.8W are dissipated on the EIBs for a total dissipation of 67.33W.		EQ / T SS / T SY / T			
15.6	**SUB-DETECTOR THERMAL I/F DESCRIPTION**					
15.6.1	**RADIATIVE**					
15.6.1.1	**MLI**					

[6] It is not an issue, due to the very large thermal capacitance of the subdetector.

Questo documento contiene informazioni di proprietà di CARLO GAVAZZI SPACE SpA. Tutti i diritti sono riservati.
All information contained in this document are property of CARLO GAVAZZI SPACE SpA. All right reserved.

Req. #	Requirement Text	RFW	Ver. Level/ Method	VERIFICATION DOCUMENT	VD Paragraph	Ver. Status
-15.6.1.1 - 010	MLI is assumed covering the ECAL bottom panel and brackets. Its external t/o properties are Beta Cloth (see par. **Errore. L'origine riferimento non è stata trovata.**)		SS / ROD SY / I			
-15.6.1.1 - 020	ECAL MLI (ECAL bottom and ECAL brackets) shall weigh less than 1.2 Kg		EQ / T			
15.6.1.2	**RADIATOR**					
-15.6.1.2 - 010	Four radiators are fixed on the Back Panels. Thermo/optical properties are Silvered Teflon 10 mils (see par. **Errore. L'origine riferimento non è stata trovata.**)		SS / ROD,I			
15.7	**HEAT EXCHANGE REQUIREMENTS WITH NEIGHBORING EXPERIMENTS**					
-15.7 -010	ECAL shall reject almost all its power by radiation, being the heat leak towards the USS02 negligible.		SS / ROD			
16	**USS**					
16.1	**TEMPERATURE REFERENCE POINT**					
-16.1 -010	All the temperature requirements of the USS shall refer to Temperature Reference Points (TRP). The location of the TRP Is on the 4 USS upper Trunnion bridges, on the lower Trunnion bridges and on the sill joint where the CDD is located		EQ / ROD,S SS / ROD			
16.2	**TEMPERATURE RANGES**					
-16.2 -010	USS02 Temperature limits are from –50°C to + 90°C		SS / A SY / A			
16.3	**SHORT-TERM TEMPERATURE STABILITY**					
N/A						
16.4	**TEMPERATURE GRADIENTS**					
-16.4 -010	USS shall have an instantaneous temperature gradient smaller than 80°C (e.g. +40°C / -40°C)		SY / A			

Questo documento contiene informazioni di proprietà di CARLO GAVAZZI SPACE SpA. Tutti i diritti sono riservati.
All information contained in this document are property of CARLO GAVAZZI SPACE SpA. All right reserved.

Req. #	Requirement Text	RFW	Ver. Level/ Method	VERIFICATION DOCUMENT	VD Paragraph	Ver. Status
16.5	**HEAT DISSIPATION**					
N/A						
16.6	**SUB-DETECTOR THERMAL I/F DESCRIPTION**					
16.6.1	**CONDUCTIVE**					
N/A						
16.6.2	**RADIATIVE**					
-16.6.2 - 010	USS02 thermo optical properties are shown in FIG 16-1		SY / ROD,I			
-16.6.2 - 020	USS02 and USS silvered Teflon tape shall weigh less than 4 Kg		EQ / T			
16.6.2.1	**MLI**					
-16.6.2.1 - 010	All USS-02 MLI shall weigh less than 5.2 Kg		EQ / T			
16.7	**HEAT EXCHANGE REQUIREMENTS WITH NEIGHBORING EXPERIMENTS**					
N/A						
17	**ISS/STS INTEGRATION H/W**					
17.1	**THERMAL REQUIREMENTS**					
-17.1 -010	UMA Passive Half Spring Operating range: From –67°C to +164°C Non operating range From –67°C to +164°C		EQ / T SY / A			
-17.1 -020	UMA Connector Backshell Operating range: From –67°C to +93°C Non operating range From –67°C to +93°C		EQ / T SY / A			

Questo documento contiene informazioni di proprietà di CARLO GAVAZZI SPACE SpA. Tutti i diritti sono riservati.
All information contained in this document are property of CARLO GAVAZZI SPACE SpA. All right reserved.

Req. #	Requirement Text	RFW	Ver. Level/ Method	VERIFICATION DOCUMENT	VD Paragraph	Ver. Status
-17.1 -030	PVGF Operating range: From –70°C to +90°C Non operating range From –157°C to +121°C		EQ / T SY / A			
-17.1 -040	FRGF Operating range: From –76°C to +168°C Non operating range From –156°C to +121°C		EQ / T SY / A			
18	**SYSTEM LEVEL REQUIREMENTS**					
18.1	**TEMPERATURE REFERENCE POINT**					
-18.1 -010	Each subsystem developer (in agreement with TWG) shall define the location of TRP/s such that their temperatures can be related to the general status of the subsystem and the critical components. *TRP location shall be precisely defined in the subsystem ICD.* *A dedicated node (addressed in the subsystem thermal reports) shall be identified for any existing Temperature Reference Point (TRP).*		SS / ROD,S			Pending subsystem ICD.
18.2	**TEMPERATURE REQUIREMENTS**					
-18.2 -010	All the sub-systems TRP/s operative and survival temperature ranges described in the previous sections shall be respected during AMS-02 operations inside the STS cargo-bay during the unmated phases as requested by AD[4]. This is valid assuming all the other requirements related to dissipated power, thermal-optical properties and heater power need are met.		SY / A	See VD[42].	Section 9.1	Pending confirmation of the analysis cases used.
-18.2 -020	All the sub-systems TRP/s operative and survival temperature ranges described in the previous sections shall be respected during AMS-02 operations inside the STS cargo-bay during docked phase. This is valid assuming all the other requirements related to dissipated power, thermal-optical properties and heater power need are met.		SY / A	See VD[42].	Section 9.2	Pending confirmation of the analysis cases used.
-18.2 -030	All the sub-systems TRPs survival temperature ranges described in the previous sections shall be respected during AMS-02 transfer from STS cargo-bay to the intermediate HAND-OFF position. This is valid assuming all the other requirements related to the transfer duration, thermal-optical properties and hot soaking before the transfer are met.		SY / A	See VD[42].	Section 9.3	Pending confirmation of the analysis cases used.
-18.2 -040	All the sub-systems TRPs operative and survival temperature ranges described in the previous sections shall be respected during AMS-02 transfer from the HAND-OFF position to the ISS truss. This is valid assuming all the other requirements related to the transfer duration, thermal-optical properties , heater power need and sequence of operation are met.		SY / A			Pending reference :

Questo documento contiene informazioni di proprietà di CARLO GAVAZZI SPACE SpA. Tutti i diritti sono riservati.
All information contained in this document are property of CARLO GAVAZZI SPACE SpA. All right reserved.

Req. #	Requirement Text	RFW	Ver. Level/ Method	VERIFICATION DOCUMENT	VD Paragraph	Ver. Status
-18.2 -050	All the sub-systems TRPs operative and survival temperature ranges described in the previous sections shall be respected during AMS-02 nominal operations on the ISS truss. This is valid assuming all the other requirements related to dissipated power, thermal-optical properties, operative modes and heater power need are met.		SY / A	See VD[42].	Section 9.4	Pending confirmation of the analysis cases used.
-18.2 -060	All the sub-systems TRPs survival temperature ranges described in the previous sections shall be respected during outage of power scenarios. This is valid assuming outage of power scenario duration is met.		SY / A			Analysis for some subsystems is pending.
18.3	**MISSION PHASES**					
-18.3 -010	All the STS unmated phases AMS-02 shall undergo are described in RD[10].		SY / ROD	See VD[42].		Pending concurrency on the perfomed analysis cases.
-18.3 -020	AMS-02 is removed from the Shuttle cargo bay by the SRMS (Shuttle Remote Manipulator System). The SRMS will bring AMS-02 to an intermediate position (HAND-OFF position) where the AMS-02 Experiment shall be grasped by the SSRMS (Space Station Remote Manipulator System) robotic arm. The Transfer phase from STS cargo-bay to the HAND-OFF position shall last not more than 4 hours.		SY / A			Pending final Issue of D10 "Definition of AMS operational modes"
-18.3 -030	The Transfer phase from the HAND-OFF position to the ISS truss site shall last not more than 5 hours (TBC)		SY / A			Pending final issue of D10 "Definition of AMS operational modes"
-18.3 -040	AMS-02 shall be designed to withstand outage of power scenarios in the extreme environment. Each outage of power scenarios shall last not more than 8 hours.		SY / A			Pending final issue of D10 "Definition of AMS operational modes"
18.4	**POWER**					
18.4.1	**STS UNMATED PHASES**					
-18.4.1 - 010	During STS unmated phases AMS-02 is connected to feed B.		SS / ROD SY / ROD,A	See VD[44].	See Fig 5-1 – PDS vs. AMS02 block diagram	CLOSED

Questo documento contiene informazioni di proprietà di CARLO GAVAZZI SPACE SpA. Tutti i diritti sono riservati.
All information contained in this document are property of CARLO GAVAZZI SPACE SpA. All right reserved.

Req. #	Requirement Text	RFW	Ver. Level/ Method	VERIFICATION DOCUMENT	VD Paragraph	Ver. Status
-18.4.1 - 020	The AMS-02 power profile during the STS unmated phases shall not exceed 1800W at 120V.		SY / T			Pending final issue of D10 "Definition of AMS operational modes"
18.4.2	**STS DOCKING PHASE**					
-18.4.2 - 010	When STS is docked to the ISS, AMS-02 is connected to feed B.		SY / ROD,A	See VD[44].	See Fig 5-1 – PDS vs. AMS02 block diagram	CLOSED
-18.4.2 - 020	The AMS-02 power profile during the STS docking phase shall not exceed 1800W at 120V		SY / T			Pending final issue of D10 "Definition of AMS operational modes"
18.4.3	**TRANSFER PHASE**					
-18.4.3 - 010	No power is supplied to the AMS-02 experiment while attached to the SRMS; that means no electrical connectivity power nor data.		SY / ROD	See VD[43].		Pending final issue of D10 "Definition of AMS operational modes"
-18.4.3 - 020	During the transfer phase from the Hand-Off position to the ISS truss , AMS-02 is connected via BCS/PVGF to feed A or feed B.		SY / ROD,A	See VD[44].	See Fig 5-1 – PDS vs. AMS02 block diagram	CLOSED
-18.4.3 - 030	The AMS-02 power profile in the transfer phase from the Hand-Off position to the ISS truss site (via SSRMS) shall be such as to draw no more than 16.7 amps over the minimum to maximum voltage range.		SY / A,T	See VD[43].		Requirement under discussion.
-18.4.3 - 040	During the transfer phase from the Hand-Off position to the ISS truss , the input voltage to the PDS (via SSRMS) shall be within the range 106.1V to 126.5V		SY / ROD	See VD[44].		Pending concurrency on the minimum input Voltage.
18.4.4	**NOMINAL OPERATIONS ON ISS**					
-18.4.4 - 010	During the nominal operations on ISS, AMS-02 is connected to feed A or feed B.		SY / ROD,A			
-18.4.4 - 020	The AMS-02 power profile on the ISS during the nominal operations shall not exceed 2400W at 120V		SY / T			Pending system TV test

Questo documento contiene informazioni di proprietà di CARLO GAVAZZI SPACE SpA. Tutti i diritti sono riservati.
All information contained in this document are property of CARLO GAVAZZI SPACE SpA. All right reserved.

Req. #	Requirement Text	RFW	Ver. Level/ Method	VERIFICATION DOCUMENT	VD Paragraph	Ver. Status
18.5	HEATERS					
-18.5 -010	During STS unmated phases, the thermostatically controlled heaters shall keep the non operative subsystems above the lower survival limit. and the operative subsystems above the minimum operative limits.		SY /A,T	See VD[42].		Pending concurrency on the perfomed analysis cases.
-18.5 -020	During the STS docking phases the thermostatically controlled heaters shall keep the non operative subsystems above the lower survival limit and the operative subsystems above the minimum operative limits.		SY /A,T	See VD[42].		Pending concurrency on the perfomed analysis cases.
-18.5 -030	Before the transfer from STS cargo-bay to the Hand-Off position, heaters shall suitably warm-up AMS-02 in order to keep AMS-02 above the survival limits at the end of the transfer.		SY /A,T	See VD[42].	See 7.1.4	Pending concurrency on the perfomed analysis cases.
-18.5 -040	In Hand-Off position as soon as AMS-02 is powered , AMS-02 120V ISS supplied heaters (thermostatically controlled) shall bring PDS TRP to the minimum switch-on temperature under extreme cold case in the voltage range 106.1V to 126.5V.		SY /A,T			Analysis case to be defined
-18.5 -050	As soon as PDS is powered up, the AMS-02 120V PDS supplied heaters default on (see heaters document) shall keep all AMS-02 subsystem TRPs above the survival limits un-definitively if power budget requirements are met.		SY /A,T			Temperature results available only for electronics crates.
-18.5 -060	Onboard ISS , AMS-02 120V ISS supplied heaters (thermostatically controlled) shall be sized to bring PDS TRP to the minimum switch-on temperature under extreme cold case in the voltage range 113V to 126.5V.		SY /A,T	See VD[18]	See section 14.2.2	CLOSED.
-18.5 -070	As soon as PDS is powered up, the AMS-02 120V PDS supplied heaters shall be sized in order to keep electronics and detectors above the minimum switch-on/operative limits under the extreme cold cases.		SY /A,T			Results spread in single sub-detectors reports.
-18.5 -080	AMS-02 heaters shall be sized to satisfy the switch-on requirements when supplied by one bus ONLY (A or B).		SY /A			Results spread in single sub-detectors reports.
-18.5 -090	The maximum heater power density for heater foils shall be 3 W/in2 (0.465 W/ cm2) at the maximum voltage (126.5V).	*Partially compliant*	SS/ROD	See VD[43].		Pending new issue of the heater document.

Questo documento contiene informazioni di proprietà di CARLO GAVAZZI SPACE SpA. Tutti i diritti sono riservati.
All information contained in this document are property of CARLO GAVAZZI SPACE SpA. All right reserved.