ORIGINALE ARCHIVIO

CARLO GAVAZZI SPACE SpA

AMS02 - TCS

Tipo Doc.: *Doc. Type:*	Technical Note			N° DRD: *DRD N°:*	DEL 075
N° Doc.: *Doc. N°:*	**AMSTCS-TN-CGS-011**	Ediz.: *Issue:* **1**	Data: *Date:* **31/03/2008**	Pagina *Page* **1**	Di *Of* **200**
Titolo : *Title :*	CRYO TCS AND SUPPORT BEAMS STRUCTURAL ANALYSIS REPORT				

	Nome & Funzione *Name & Function*	Firma *Signature*	Data *Date*
Preparato da: *Prepared by:*	Bursi A. (DT/MT) Zavallini L. (DT/MT)	Alessandro Bursi Lorenzo Zavallini	31-03-08 31/03/08
Approvato da: *Approved by:*	Duò F. (DT/MT) Vettore C. (SYS) Cremonesi L. (PA/QA) Cinquepalmi C. (PA/CC)	Fabio Duò [illegible] L. Cremonesi C. Cinquepalmi	31/03/2008 31/03/2008 31.03.08 31.03.08
Applicazione autorizzata da: *Application authorized by:*	Ollvier M. (PM)	M. Olivier	31/03/2008

Customer / Higher Level Contractor			
Accettato da: *Accepted by:*			
Approvato da: *Approved by:*			

LISTA DI DISTRIBUZIONE *DISTRIBUTION LIST*	N	A	I
Interna / *Internal*			
Esterna / *External*			
E. Russo (ASI)			x

N=Numero di copie A=Applicazione I=Informazione
N=Number of copy A=Application I=Information

Gestione documenti: *Data Management:* Firma / *Container* Data / *Date* 31/03/08

File: AMSTCS-TN-CGS-011_ISS1.doc

Questo documento contiene informazioni di proprietà di CARLO GAVAZZI SPACE SpA. Tutti i diritti sono riservati.
All information contained in this document are property of CARLO GAVAZZI SPACE SpA. All right reserved.

REGISTRAZIONE DELLE MODIFICHE / *CHANGE RECORD*			
EDIZIONE *ISSUE*	**DATA** *DATE*	**AUTORIZZAZIONE** *CHANGE AUTHORITY*	**OGGETTO DELLA MODIFICA E SEZIONI AFFETTE** *REASON FOR CHANGE AND AFFECTED SECTIONS*
1	31/03/08		First Issue

Questo documento contiene informazioni di proprietà di CARLO GAVAZZI SPACE SpA. Tutti i diritti sono riservati.
All information contained in this document are property of CARLO GAVAZZI SPACE SpA. All right reserved.

LISTA DELLE PAGINE VALIDE / *LIST OF VALID PAGES*

PAGINA *PAGE*	EDIZIONE *ISSUE*	PAGINA *PAGE*	EDIZIONE *ISSUE*	PAGINA *PAGE*	EDIZIONE *ISSUE*	PAGINA *PAGE*	EDIZIONE *ISSUE*	PAGINA *PAGE*	EDIZIONE *ISSUE*
1 - 200	1								

Questo documento **contiene** informazioni di proprietà di CARLO GAVAZZI SPACE SpA. Tutti i diritti **sono** riservati.
*All information contained in **this** document are property of CARLO GAVAZZI SPACE SpA. All right reserved.*

TABLE OF CONTENT

1. SCOPE 12

2. RELEVANT DOCUMENTS 13

2.1 APPLICABLE DOCUMENTS 13
2.2 REFERENCE DOCUMENTS 13

3. ACRONYMS AND ABBREVIATIONS 14

4. TCS RADIATORS FLIGHT HARDWARE DESCRIPTION 15

5. CRYO TCS ZENITH RADIATORS AND VSB FEM DESCRIPTION 19

5.1 USED SOFTWARE 19
5.2 MODEL UNITS 20
5.3 MODEL COORDINATE SYSTEM 20
5.4 MODEL MATERIALS 22
5.4.1 AL 2024 T81 22
5.4.2 ROHACELL 51WF 23
5.4.3 AL 7075 T7351 24
5.4.4 TI-6AL-4V 25
5.4.5 PEEK 1000 26
5.4.6 AL3103 27
5.4.7 AISI316L 28
5.4.8 CARBON FIBRE 29
5.4.9 GLASS FIBER REINFORCED PLASTIC 30
5.4.10 DUMMY MATERIAL FOR BOLTED CONNECTIONS 31
5.5 FEM MODEL COMPONENTS DESCRIPTION 32
5.5.1 ZENITH RADIATOR 33
5.5.2 SPOKES 34
5.5.3 LHP CONDENSER LINE 35
5.5.4 LHP TRANSPORT LINE 36
5.5.5 Z-BRACKETS 37
5.5.6 STIFF BRACKETS 38
5.5.7 GPS ANTENNA SUPPORT 39
5.5.8 BIMETALLIC SUPPORT BRACKETS 40
5.5.9 LHP TRD BRACKETS 41
5.5.10 VSB SUPPORT 42
5.5.11 VSB BODY 43
5.5.12 VSB COVER 44
5.5.13 LHP VSB STAND-OFF 45
5.5.14 LHP VSB BRACKET 46
5.5.15 LHP VSB3 UPPER BKT 47
5.6 MODEL BOUNDARY CONDITIONS 48
5.7 MODEL MASS BUDGET 49
5.8 MODEL CHECK 50
5.8.1 MODEL SIZE AND GEOMETRY 50
5.8.2 FREE-FREE AND HARDMOUNTED MODES 51
5.8.3 1 G CHECK 52
5.8.3.1 STRAIN ENERGY CHECK 54
5.8.3.2 THERMOELASTIC CHECK 55

6. CRYO TCS ZENITH RADIATORS AND VSB DIMENSIONING LOADS 57

6.1 INERTIAL LOADS AND ACOUSTIC LOADS 57
6.2 EVA LOADS 59

Questo documento contiene informazioni di proprietà di CARLO GAVAZZI SPACE SpA. Tutti i diritti sono riservati.
All information contained in this document are property of CARLO GAVAZZI SPACE SpA. All right reserved.

6.3 THERMOELASTIC LOADS 60

7. TCS RADIATORS DIMENSIONING RULES 61

7.1 SAFETY FACTORS 61
7.2 MARGINS OF SAFETY FOR STRUCTURE 62
7.3 FAILURE INDEX FOR COMPOSITE STRUCTURE 62

8. CRYO-TCS STRUCTURAL ANALYSIS FOR NOMINAL CONFIGURATION 64

8.1 DYNAMIC ANALYSIS FOR NOMINAL CONFIGURATION 64
8.2 STATIC ANALYSIS FOR NOMINAL CONFIGURATION 74
8.2.1 DISPLACEMENT ANALYSIS FOR NOMINAL CONFIGURATION 74
8.2.2 STRESS ANALYSIS FOR NOMINAL CONFIGURATION 74
8.2.2.1 STIFF BRACKETS 76
8.2.2.2 GPS ANTENNA SUPPORT 77
8.2.2.3 ZENITH RADIATOR PANEL (SKIN) 78
8.2.2.4 ZENITH RADIATOR PANEL (CORE) 79
8.2.2.5 LHP CONDENSER LINE 80
8.2.2.5.1 LHP CONDENSER LINE NON LINEAR ANALYSIS RESULTS 81
8.2.2.6 SPOKES 85
8.2.2.7 BIMETALLIC SUPPORT BRACKETS 86
8.2.2.8 LHP TRANSPORT LINE 87
8.2.2.9 LHP TRD BRACKETs 89
8.2.2.10 VSB SUPPORT 90
8.2.2.11 LHP VSB BRACKET 91
8.2.2.12 LHP VSB STAND-OFF 93
8.2.2.13 LHP VSB3 UPPER BRACKET 94
8.2.2.14 Z-BRACKET 95
8.2.2.15 VSB COVER 96
8.2.2.16 VSB BODY 97
8.2.2.17 STRESS ANALYSIS MOS SUMMARY FOR NOMINAL CONFIGURATION 98
8.2.3 JOINT ANALYSIS FOR NOMINAL CONFIGURATION 100
8.2.3.1 JOINT 1: Z-BRACKET (NOMINAL CONF.) 103
8.2.3.2 JOINT 2: STIFF BRACKET (NOMINAL CONF.) 108
8.2.3.3 JOINT 3: SPOKES (NOMINAL CONF.) 114
8.2.3.4 JOINT 4: GPS ANTENNA SUPPORT/TRD (NOMINAL CONF.) 118
8.2.3.5 JOINT 5: GPS ANTENNA/GPS ANTENNA SUPPORT (NOMINAL CONF.) 122
8.2.3.6 JOINT 6: VSB - VACUUM CASE JOINT (NOMINAL CONF.) 125
8.2.3.7 JOINT 7: VSB BODY / LHP VSB BKT (NOMINAL CONF.) 128
8.2.3.8 JOINT 8: VSB SUPPORTS/ LHP VSB STAND-OFF JOINT (NOMINAL CONF.) 131
8.2.3.9 JOINT 9: VSB BODY/VSB COVER (NOMINAL CONF.) 134
8.2.3.10 JOINT 10: BIMETALLIC SUPPORT BKT/RADIATOR (NOMINAL CONF.) 137
8.2.3.11 JOINT 11: VSB SUPPORTS/VSB BODY (NOMINAL CONF.) 140
8.2.3.12 JOINT ANALYSIS MOS SUMMARY FOR NOMINAL CONFIGURATION 143
8.2.4 LOCAL BUCKLING ANALYSIS FOR NOMINAL CONFIGURATION 144
8.2.4.1 SPOKES 145
8.2.4.2 INSTABILITY ANALYSIS MOS SUMMARY FOR NOMINAL CONFIGURATION 145
8.2.5 INSERTS AND BONDED JOINT VERIFICATION FOR NOMINAL CONFIGURATION 146
8.2.5.1 ZENITH RADIATOR PANEL INSERTS 146
8.2.5.2 BONDED JUNCTION VERIFICATION 148
8.2.5.2.1 CONDENSER LINE RADIATOR PANEL VERIFICATION 149
8.2.5.2.2 ZENITH RADIATOR CONDENSER LINE-PANEL SKIN VERIFICATION 150
8.2.5.2.3 Spokes GFRP bar – Titanium ends verification 151
8.2.5.3 INSERTS AND BONDED JOINT MOS SUMMARY FOR NOMINAL CONFIGURATION 152
8.2.6 BIMETALLIC JOINT VERIFICATION 152
8.2.6.1 BIMETALLIC JOINT MOS SUMMARY FOR NOMINAL CONFIGURATION 155

Questo documento contiene informazioni di proprietà di CARLO GAVAZZI SPACE SpA. Tutti i diritti sono riservati.
All information contained in this document are property of CARLO GAVAZZI SPACE SpA. All right reserved.

9. CRYO TCS SYSTEM AND VSB STRUCTURAL ANALYSIS FOR FAIL SAFE CONFIGURATION 156

9.1 DYNAMIC ANALYSIS FOR FAIL SAFE CONFIGURATION 157
9.2 STATIC ANALYSIS FOR FAIL SAFE CONFIGURATION 160
9.2.1 STRESS ANALYSIS FOR FAIL SAFE CONFIGURATION JOINT 1A 160
9.2.1.1 Z- BRACKET 160
9.2.1.2 ZENITH RADIATOR PANEL (SKIN) 162
9.2.1.3 ZENITH RADIATOR PANEL (CORE) 163
9.2.2 STRESS ANALYSIS FOR FAIL SAFE CONFIGURATION JOINT 1B 164
9.2.2.1 Z- BRACKET 164
9.2.2.2 ZENITH RADIATOR PANEL (SKIN) 165
9.2.2.3 ZENITH RADIATOR PANEL (CORE) 166
9.2.3 STRESS ANALYSIS FOR FAIL SAFE CONFIGURATION JOINT 6 166
9.2.3.1 VSB SUPPORT 166
9.2.3.2 VSB COVER 168
9.2.3.3 VSB BODY 169
9.2.3.4 STRESS ANALYSIS MOS SUMMARY FOR FAIL SAFE CONFIGURATION 170
9.2.4 JOINT ANALYSIS FOR FAIL SAFE CONFIGURATION 171
9.2.4.1 JOINT 1: Z-BRACKET (FAIL SAFE CONF.) 172
9.2.4.2 JOINT 2: STIFF BRACKET (FAIL SAFE CONF.) 174
9.2.4.3 JOINT 3: SPOKES (FAIL SAFE CONF.) 176
9.2.4.4 JOINT 4: GPS ANTENNA SUPPORT/TRD (FAIL SAFE CONF.) 178
9.2.4.5 JOINT 5: GPS ANTENNA/GPS ANTENNA SUPPORT (FAIL SAFE CONF.) 179
9.2.4.6 JOINT 6: VSB - VACUUM CASE (FAIL SAFE CONF.) 180
9.2.4.7 JOINT 7: VSB BODY / LHP VSB BKT (FAIL SAFE CONF.) 181
9.2.4.8 JOINT 8: VSB SUPPORTS/ LHP VSB STAND-OFF (FAIL SAFE CONF.) 182
9.2.4.9 JOINT 9: VSB BODY/VSB COVER (FAIL SAFE CONF.) 183
9.2.4.10 JOINT 10: JOINT 10: BIMETALLIC SUPPORT BKT/RADIATOR (FAIL SAFE CONF.) 184
9.2.4.11 JOINT 11: VSB SUPPORTS/VSB BODY (FAIL SAFE CONF.) 185
9.2.4.12 JOINT ANALYSIS MOS SUMMARY FOR FAIL SAFE CONFIGURATION 186
9.2.5 INSERTS VERIFICATION FOR FAIL SAFE CONFIGURATION 187
9.2.5.1 INSERTS MOS SUMMARY FOR FAIL SAFE CONFIGURATION 187

10. CONCLUSIONS AND COMMENTS 188

ANNEX 1 189

ANNEX 2 198

Questo documento contiene informazioni di proprietà di CARLO GAVAZZI SPACE SpA. Tutti i diritti sono riservati.
All information contained in this document are property of CARLO GAVAZZI SPACE SpA. All right reserved.

LIST OF TABLES

Table 4-1: Verified items – 1 of 2 17
Table 4-2: Verified items – 2 of 2 18
Table 4-3: Strength and buckling verification explanation 18
Table 5-1: AL 2024 T81 properties 22
Table 5-2: AL 2024 T81 in FE model 22
Table 5-3: ROHACELL properties 23
Table 5-4: ROHACELL in FE model 23
Table 5-5: AL 7075 T7351 properties 24
Table 5-6: Al 7075 T7351 in FE model 24
Table 5-7: Ti-6AL-4V properties 25
Table 5-8: Ti-6AL-4V in FE model 25
Table 5-9: Peek 1000 properties 26
Table 5-10: Peek 1000 in FE model 26
Table 5-11: Al 3103 properties 27
Table 5-12: Al 3103 in FE model 27
Table 5-13: AISI 316L properties 28
Table 5-14: AISI 316L in FE model 28
Table 5-15: CFRP plain wave properties 29
Table 5-16: CFRP in FE model 29
Table 5-17: VSB body and cover ply layup 29
Table 5-18: GFRP plain wave properties 30
Table 5-19: GFRP pultruded properties 30
Table 5-20: GFRP in FE model 31
Table 5-21: VSB body and cover ply disposition 31
Table 5-22: Cryo Tcs Model summary 32
Table 5-23: CRYO-TCS and VSB FEM mass budget 49
Table 5-24: FEM Geometry Check 50
Table 5-25: FEM mass properties, free-free modes, hardmounted modes 51
Table 5-26: FEM 1g check 52
Table 5-27: FEM Strain Energy check 54
Table 5-28:–Thermal analysis check 55
Table 6-1: Design Limit Load Factors for small secondary structures 57
Table 6-2: Inertial and Acoustic loads for CRYO TCS Zenith Radiator and VSB 58
Table 6-3: EVA Loads for Zenith Radiator 59
Table 6-4: Thermo elastic load case 60
Table 7-1: Safety Factors for structure 61
Table 8-1: CRYO-TCS natural frequencies above 5% of effective mass 64
Table 8-2: Al3103 – O in FE model for the non-linear analysis 82
Table 8-3: flange dimension 92
Table 8-4: β factor 92
Table 8-5: Parts MoS summary (1 of 2) 98
Table 8-6: Parts MoS summary (2 of 2) 99
Table 8-7: Verified joint for nominal configuration 100
Table 8-8: MoS definition for bolt analysis 102
Table 8-9: JOINT 1a – nominal configuration 105
Table 8-10: JOINT 1b – nominal configuration 107
Table 8-11: JOINT 2a – nominal configuration 110
Table 8-12: JOINT 2b – tollerance for sliding 111
Table 8-13: JOINT 2b – nominal configuration 113
Table 8-14: JOINT 3a – nominal configuration 116
Table 8-15: JOINT 3b – nominal configuration 117
Table 8-16: JOINT 4 – nominal configuration 121
Table 8-17: JOINT 5 – nominal configuration 124

Questo documento contiene informazioni di proprietà di CARLO GAVAZZI SPACE SpA. Tutti i diritti sono riservati.
All information contained in this document are property of CARLO GAVAZZI SPACE SpA. All right reserved.

Table 8-18: JOINT 6 – nominal configuration 127
Table 8-19: JOINT 7 – nominal configuration 130
Table 8-20: JOINT 8 – nominal configuration 133
Table 8-21: JOINT 9 – nominal configuration 136
Table 8-22: JOINT 10 – nominal configuration 139
Table 8-23: JOINT 11 – nominal configuration 142
Table 8-24: Joint analysis MoS summary in nominal configuration 143
Table 8-25 Spoke buckling analysis results 145
Table 8-26: MOS summary table for local buckling - spokes 145
Table 8-27 Maximum forces acting on the Zenith radiator Inserts 146
Table 8-28 Zenith Radiator Insert verification summary 147
Table 8-29: MOS summary table for condenser line – radiator skin bonded connection 149
Table 8-30: MOS summary table for radiator skin – Rohacell core connection 150
Table 8-31: MOS summary table for inserts and bonded junction 152
Table 8-32: MOS summary table for bimetallic joint 154
Table 8-33: MOS summary table for bimetallic joint 155
Table 9-1: Nominal vs Fail Safe Joint 1A, modal analysis 157
Table 9-2: Nominal vs Fail Safe Joint 1B, modal analysis 158
Table 9-3: Nominal vs Fail Safe Joint 6, modal analysis 159
Table 9-4: MoS summary for fail safe configuration 170
Table 9-5: Verified joint for nominal configuration 171
Table 9-6: JOINT 1a – fail safe configuration 172
Table 9-7: JOINT 1b – fail safe configuration 173
Table 9-8: JOINT 2a – fail safe configuration 174
Table 9-9: JOINT 2b – fail safe configuration 175
Table 9-10: JOINT 3a – fail safe configuration 176
Table 9-11: JOINT 3b – fail safe configuration 177
Table 9-12: JOINT 4 – fail safe configuration 178
Table 9-13: JOINT 5 – fail safe configuration 179
Table 9-14: JOINT 6 – fail safe configuration 180
Table 9-15: JOINT 7 – fail safe configuration 181
Table 9-16: JOINT 8 – fail safe configuration 182
Table 9-17: JOINT 9 – fail safe configuration 183
Table 9-18: JOINT 10 – fail safe configuration 184
Table 9-19: JOINT 11 – fail safe configuration 185
Table 9-20: Joint analysis MoS summary in fail safe configuration 186
Table 9-21 Maximum forces acting on the Zenith radiator Inserts for Fail Safe configuration 187
Table 9-22 Zenith Radiator Insert verification summary 187
Table 9-23: MOS summary table for inserts for Fail Safe configuration 187

Questo documento contiene informazioni di proprietà di CARLO GAVAZZI SPACE SpA. Tutti i diritti sono riservati.
All information contained in this document are property of CARLO GAVAZZI SPACE SpA. All right reserved.

LIST OF FIGURES

Figure 4-1: General view of AMS-02 15
Figure 4-2: CRYO TCS system and VSB view positioned on the vacuum case 16
Figure 5-1: General view of the CRYO TCS Zenith Radiators and VSB FE model 19
Figure 5-2: AMS-02 coordinate system 20
Figure 5-3: CRYO TCS Zenith Radiators and VSB dimensions wrt AMS coordinate system 21
Figure 5-4: Zenith Radiator 33
Figure 5-5: Spoke 34
Figure 5-6: Spokes assembly 34
Figure 5-7: LHP Condenser Line 35
Figure 5-8: LHP Transport Lines 36
Figure 5-9: Z-Brackets 37
Figure 5-10: Stiff Brackets 38
Figure 5-11: Gps Antenna Support 39
Figure 5-12: Bimetallic Support Brackets 40
Figure 5-13: LHP TRD Brackets 41
Figure 5-14: VSB Support 42
Figure 5-15: VSB body 43
Figure 5-16: VSB cover 44
Figure 5-17: LHP VSB stand-off 45
Figure 5-18: LHP VSB bracket 46
Figure 5-19: LHP VSB3 upper bracket 47
Figure 5-20: Model boundary conditions for CRYO TCS 48
Figure 5-21: 1G check analysis run results 53
Figure 5-22: Thermal check analysis run results, Von Mises stress 56
Figure 5-23: Thermal check analysis run results, Maximum Combined stress 56
Figure 6-1: EVA Load Cases on Zenith Radiator 59
Figure 6-2: Temperature distribution on LHP transport lines during the AMS power off 60
Figure 8-1: mode 6 at 50.40 Hz 65
Figure 8-2: mode 21 at 68.57 Hz 65
Figure 8-3: mode 115 at 136.54 Hz 66
Figure 8-4: mode 116 at 136.54 Hz 66
Figure 8-5: mode 117 at 136.60 Hz 67
Figure 8-6: mode 118 at 136.62 Hz 67
Figure 8-7: mode 122 at 138.58 Hz 68
Figure 8-8: mode 123 at 138.58 Hz 68
Figure 8-9: mode 124 at 138.63 Hz 69
Figure 8-10: mode 125 at 138.66 Hz 69
Figure 8-11: mode 142 at 155.35 Hz 70
Figure 8-12: mode 145 at 155.98 Hz 70
Figure 8-13: mode 146 at 155.98 Hz 71
Figure 8-14: mode 147 at 156.32 Hz 71
Figure 8-15: mode 192 at 195.57 Hz 72
Figure 8-16: mode 193 at 195.57 Hz 72
Figure 8-17: mode 194 at 195.68 Hz 73
Figure 8-18: mode 195 at 195.94 Hz 73
Figure 8-19: Deformation – Load case 10 74
Figure 8-20: Stiff Bracket, Load Case 29, Layer Z2 76
Figure 8-21: Gps Antenna Support, Load Case 29, Layer Z1 77
Figure 8-22: Zenith Radiator Panel (skin), Load Case 29, Layer Z2 78
Figure 8-23: Zenith Radiator Panel (core), Load Case 25 79
Figure 8-24: LHP Condenser Line, Load Case 29 80
Figure 8-25 Al3103 behavior wrt the different hardness 81
Figure 8-26 Detailed condenser line shell model used to perform the non linear analysis 82

Questo documento contiene informazioni di proprietà di CARLO GAVAZZI SPACE SpA. Tutti i diritti sono riservati.
All information contained in this document are property of CARLO GAVAZZI SPACE SpA. All right reserved.

Figure 8-27 Non linear load case entity. On left the enforced displacement, at center the internal pressure load and on right the temperature load 83
Figure 8-28: LHP Condenser Line, loaded non-linear solution 83
Figure 8-29: LHP Condenser Line, residual stress on pipe 84
Figure 8-30: LHP Condenser Line, residual deformation 84
Figure 8-31: Spokes, Load Case 29 85
Figure 8-32: Bimetallic Support Bracket, Load Case 29, Layer Z1 86
Figure 8-33: LHP Transport Line, Load Case 29 87
Figure 8-34: LHP Transport Line maximum displacement 88
Figure 8-35: LHP TRD Brackets, Load Case 29, Layer Z2 89
Figure 8-36: VSB Support, Load Case 10, Layer Z1 90
Figure 8-37: LHP VSB Bracket, Load Case 29, Layer 1 91
Figure 8-38: LHP VSB Bracket analysis 92
Figure 8-39: LHP VSB Stand-Off, Load Case 29, Layer Z2 93
Figure 8-40: LHP VSB3 Upper Bracket, Load Case 29, Layer Z1 94
Figure 8-41: Z-Bracket, Load Case 1 95
Figure 8-42: VSB Cover, Load Case 11 96
Figure 8-43: VSB Body, Load Case 29 97
Figure 8-44: Joint 1a on Zenith Radiator 103
Figure 8-45: Forces on JOINT 1a Max Axial – Load case 08 104
Figure 8-46: Forces on JOINT 1a – Max Shear and combined – Load case 29 104
Figure 8-47: Forces on JOINT 1b – Max Axial and combined – Load case 14 106
Figure 8-48: Forces on JOINT 1b – Max Shear – Load case 01 106
Figure 8-49: Joint 2a and Joint 2b 108
Figure 8-50: Forces on JOINT 2a – Max Axial – Load case 25 109
Figure 8-51: Forces on JOINT 2a– Max Shear and combined – Load case 03 109
Figure 8-52: Forces on JOINT 2b – Max Axial – Load case 13 112
Figure 8-53: Forces on JOINT 2b– Max Shear and combined – Load case 10 112
Figure 8-54: Joint 3a and Joint 3b 114
Figure 8-55: Forces on JOINT 3a – Max Axial and combined – Load case 27 115
Figure 8-56: Forces on JOINT 3a– Max Shear– Load case 29 115
Figure 8-57: Joint 4 118
Figure 8-58: Forces on JOINT 4 – Max Axial and combined – Load case 14 119
Figure 8-59: Forces on JOINT 4 – Max Shear – Load case 02 119
Figure 8-60: Forces on JOINT 4 – Max Combined – Load case 04 120
Figure 8-61: Joint 5 122
Figure 8-62: Forces on JOINT 5 – Max Axial and combined – Load case 08 123
Figure 8-63: Forces on JOINT 5 – Max Shear – Load case 09 123
Figure 8-64: Joint 6 125
Figure 8-65: Forces on JOINT 6 – Max Axial – Load case 01 126
Figure 8-66: Forces on JOINT 6 – Max Shear and combined – Load case 04 126
Figure 8-67: Joint 7 128
Figure 8-68: Forces on JOINT 7 – Max Axial, Max Shear and combined – Load case 29 129
Figure 8-69: Joint 8 131
Figure 8-70: Forces on JOINT 8 – Max Axial and combined – Load case 03 131
Figure 8-71: Forces on JOINT 8 – Max Shear– Load case 01 132
Figure 8-72: Joint 9 134
Figure 8-73: Forces on JOINT 9 – Max Axial – Load case 07 135
Figure 8-74: Forces on JOINT 9 – Max Shear and combined – Load case 02 135
Figure 8-75: Joint 10 137
Figure 8-76: Joint 10 numeration pattern 137
Figure 8-77: Forces on JOINT 10 – Max Axial – Load case 27 138
Figure 8-78: Forces on JOINT 10 – Max Shear and combined – Load case 29 138
Figure 8-79: Joint 11 140
Figure 8-80: Forces on JOINT 11 – Max Axial – Load case 05 140
Figure 8-81: Forces on JOINT 11 – Max Shear and combined – Load case 04 141

Questo documento contiene informazioni di proprietà di CARLO GAVAZZI SPACE SpA. Tutti i diritti sono riservati.
All information contained in this document are property of CARLO GAVAZZI SPACE SpA. All right reserved.

Figure 8-82: Eulerian buckling geometry 144
Figure 8-83: On top the tested insert drawing, on bottom a zenith radiator insert 147
Figure 8-84: Force Application Area for the Condenser Line 149
Figure 8-85: Force Application Area for the Radiator Skin 150
Figure 8-86: Spokes GFRP bar-Titanium ends connection geometry 151
Figure 8-87: Bimetallic Joint 152
Figure 8-88: Bimetallic joint axial worst case for LC 28 153
Figure 8-89: Bimetallic joint shear worst case for LC 29 154
Figure 9-1: modal comparison Nominal / Fail Safe Joint 1A 157
Figure 9-2: modal comparison Nominal / Fail Safe Joint 1B 158
Figure 9-3: modal comparison Nominal / Fail Safe Joint 6 159
Figure 9-4: Z-Bracket Fail Safe 1A, Load Case 29 161
Figure 9-5: Zenith Radiator Panel (skin) Fail Safe 1A, Load Case 29, Layer Z2 162
Figure 9-6: Zenith Radiator Panel (core) Fail Safe 1A, Load Case 25 163
Figure 9-7: Z-Bracket Fail Safe 1B, Load Case 29 164
Figure 9-8: Zenith Radiator Panel (skin) Fail Safe 1B, Load Case 29, Layer Z2 165
Figure 9-9: Zenith Radiator Panel (core) Fail Safe 1B, Load Case 25 166
Figure 9-10: VSB Support Fail Safe 6, Load Case 10, Layer Z2 167
Figure 9-11: VSB Cover Fail Safe 6, Load Case 10 168
Figure 9-12: VSB Body Fail Safe 6, Load Case 29 169

Questo documento contiene informazioni di proprietà di CARLO GAVAZZI SPACE SpA. Tutti i diritti sono riservati.
All information contained in this document are property of CARLO GAVAZZI SPACE SpA. All right reserved.

1. SCOPE

This document corresponds to contract deliverable DEL 075.
The verification by analysis of the structural requirements of AMS-02 CRYO TCS Zenith Radiators and Vertical Support Beams (VSB) has been described.

The compliance with the structural requirements has been verified for the following items:

- Zenith radiator including
  - Z-Brackets
  - Stiff Bracket
  - GPS Antenna Support
  - Radiator Panel
  - Loop Heat Pipes (LHP) Condenser Line
  - Spokes
  - LHP Transport Lines
  - Bimetallic Support Brackets
- Vertical Support Beams (VSB) including
  - VSB Supports
  - CFRP body
  - CFRP cover
  - LHP VSB brackets
  - LHP VSB stand-off
  - LHP VSB3 upper bracket

The mathematical finite element model used in this document contains the following items:

- Zenith Radiator Panels
- VSB structure

The scope of these analyses is to demonstrate that the design of the AMS-02 CRYO TCS and the VSB is compliant with the structural requirements of AD 1.

A summary of the requirements follow:

- First frequency of the entire structure > 50 Hz (AD 1)
- All MoS positive, under applicable launch and landing design loads (AD 1)
- All MoS positive, under applicable EVA loads (AD 1)
- All MoS positive, under applicable thermo elastic loads (RD11)
- No buckling under applicable loads (AD 1)
- Presentation of the Table for the safety review

In accordance with AD 1 requirements, both nominal and fail safe configurations are considered.

Questo documento contiene informazioni di proprietà di CARLO GAVAZZI SPACE SpA. Tutti i diritti sono riservati.
All information contained in this document are property of CARLO GAVAZZI SPACE SpA. All right reserved.

2. RELEVANT DOCUMENTS

2.1 APPLICABLE DOCUMENTS

AD # (ID)	Doc Number	Issue	Date	Rev	Title
AD 1	JSC-28792	D	March, 2005		AMS-02 STRUCTURAL VERIFICATION PLAN FOR SPACE TRANSPORTATION SYSTEM AND THE INTERNATIONAL SPACE STATION

2.2 REFERENCE DOCUMENTS

RD # (ID)	Doc Number	Issue	Date	Rev	Title
RD. 1	MIL-HDBK-5	H	Dec, 1998		Metallic Materials and Elements for Aerospace Vehicle Structures
RD. 2	NSTS 8307		07/06/98	A	Criteria for preloaded bolts
RD 3	SSP-57003		05/08/02	A	Attached Payload Interface Requirements Document
RD 4			Jun, 1973		Bruhn – Analysis and Design of Flight Vehicle Structures
RD 5	NSTS 1700.7B		13/01/89		Safety policy and requirements for payloads using the space transportation system
RD 6	NSTS 1700.7B ISS ADD		Dec, 1995		Safety Policy and Requirements
RD 7	PDS-TN-CGS-010	1	25/03/08		PDS FM Structural Analysis
RD 8	SSP 52000-IDD-EPP	Draft 5	10-Oct-01		Express Pallet Payloads Interface Definition Document
RD 9	AMS02-RP-CGS-014	1	15/01/2004		AMS02 – Tracker rods – Destructive test results
RD 10	RITF Test Report Job n. 061335		11/01/2007		Alpha Magnetic Spectrometer – Bonded Foam Samples
RD 11	AMS-TN-CGS-012	1	31/03/2008		CRYO TCS THERMAL ANALYSIS REPORT
RD 12					CHERRYMAX RIVET DATASHEET
RD 13		6			Roark's Formulas for Stress & Strain
RD 14	AMS-OHB-SAR-001	4	01/04/2005		Zenith Radiator Structural Analysis Report
RD 15			11/10/2007		Email from Jacobs: EVA Loads on Zenith Radiator and GPS Antenna Bracket
RD 16	AMSTCS-PR-CGS-007	1	Feb, 2008		Ams Zenith Radiator LHP Transport Line Bending Test
RD 17	AMSTCS-RP-CGS-002	1	Mar, 2008		Ams Zenith Radiator LHP Transport Line Bending Test Report
RD 18			14/11/2007		Email from Allectra: Bimetallic Joint Mechanical Strength
RD 19	061335		11/01/2007		Alpha Magnetic Spectrometer Bonded Foam Samples
RD 20					Technical datasheet: Master Bond Polymer System EP21TDC-2LO
RD 21			Aug, 2005		Technical datasheet: 3M Scotch-Weld Epoxy Adhesive 2216B/A

Questo documento contiene informazioni di proprietà di CARLO GAVAZZI SPACE SpA. Tutti i diritti sono riservati.
All information contained in this document are property of CARLO GAVAZZI SPACE SpA. All right reserved.

3. ACRONYMS AND ABBREVIATIONS

AMS	Alpha Magnetic Spectrometer
BKT	Bracket
EID	Element Identification
EVA	Extra Vehicular Activity
FEM	Finite Element Model
I/F	Interface
LC	Load Case
LHP	Loop Heat Pipe
MoS	Margin Of Safety
MU	Measurement Unit
NA	Not Available
SAR	Structural Analysis Report
SF	Safety Factor
SPC	Single Point Constrain
TBD	To Be Defined
TCS	Thermal Control System
TRD	Transition Radiation Detector
USS	Unique Support Structure
VSB	Vertical Support Beams
WRT	With Respect To

Questo documento contiene informazioni di proprietà di CARLO GAVAZZI SPACE SpA. Tutti i diritti sono riservati.
All information contained in this document are property of CARLO GAVAZZI SPACE SpA. All right reserved.

4. TCS RADIATORS FLIGHT HARDWARE DESCRIPTION

Next image shows the Zenith Radiator position onto AMS-02.

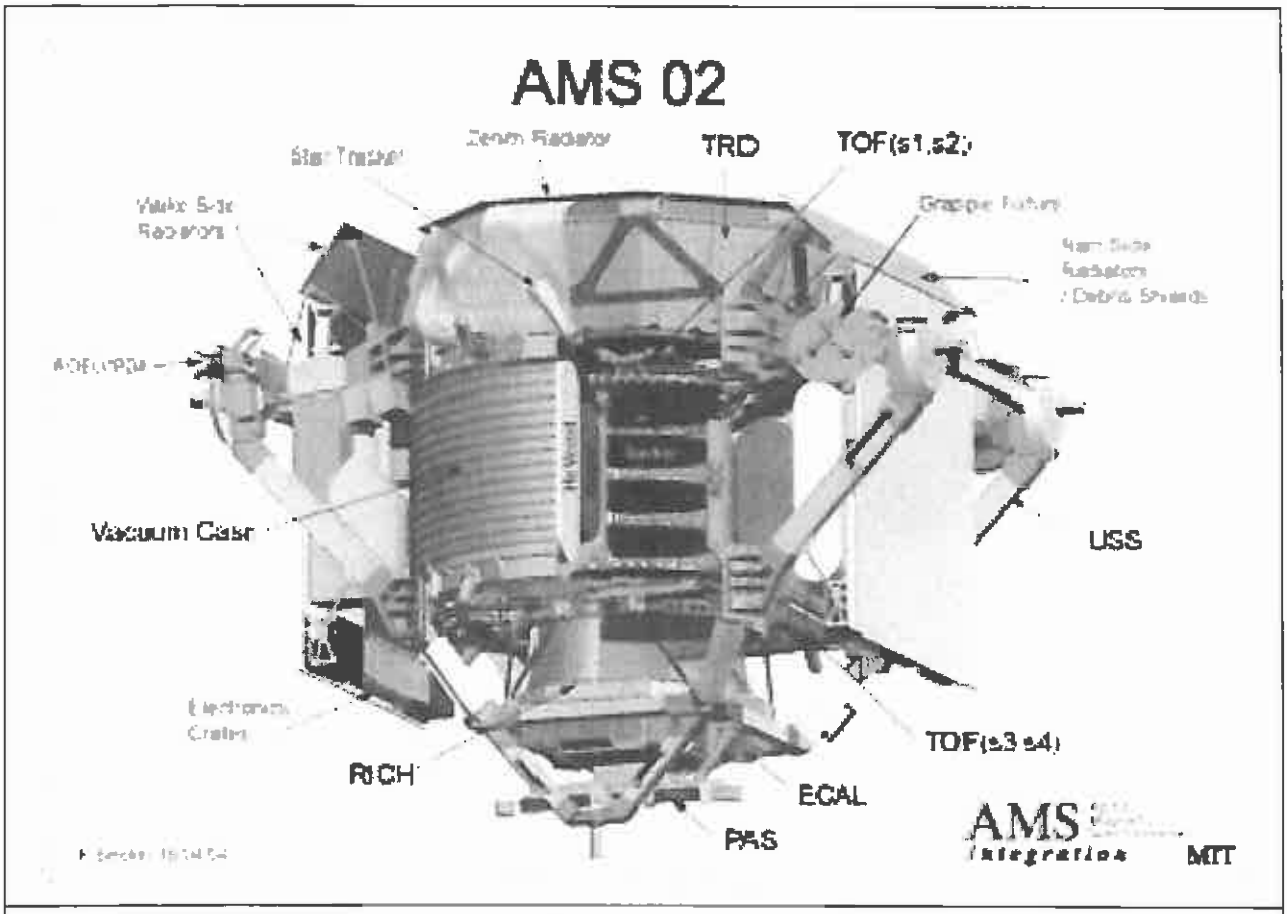

Figure 4-1: General view of AMS-02

The VSB are placed on the lateral surface of vacuum case. The following figure shows the Zenith Radiator and VSB positions with respect to the Vacuum Case.

Questo documento contiene informazioni di proprietà di CARLO GAVAZZI SPACE SpA. Tutti i diritti sono riservati.
All information contained in this document are property of CARLO GAVAZZI SPACE SpA. All right reserved.

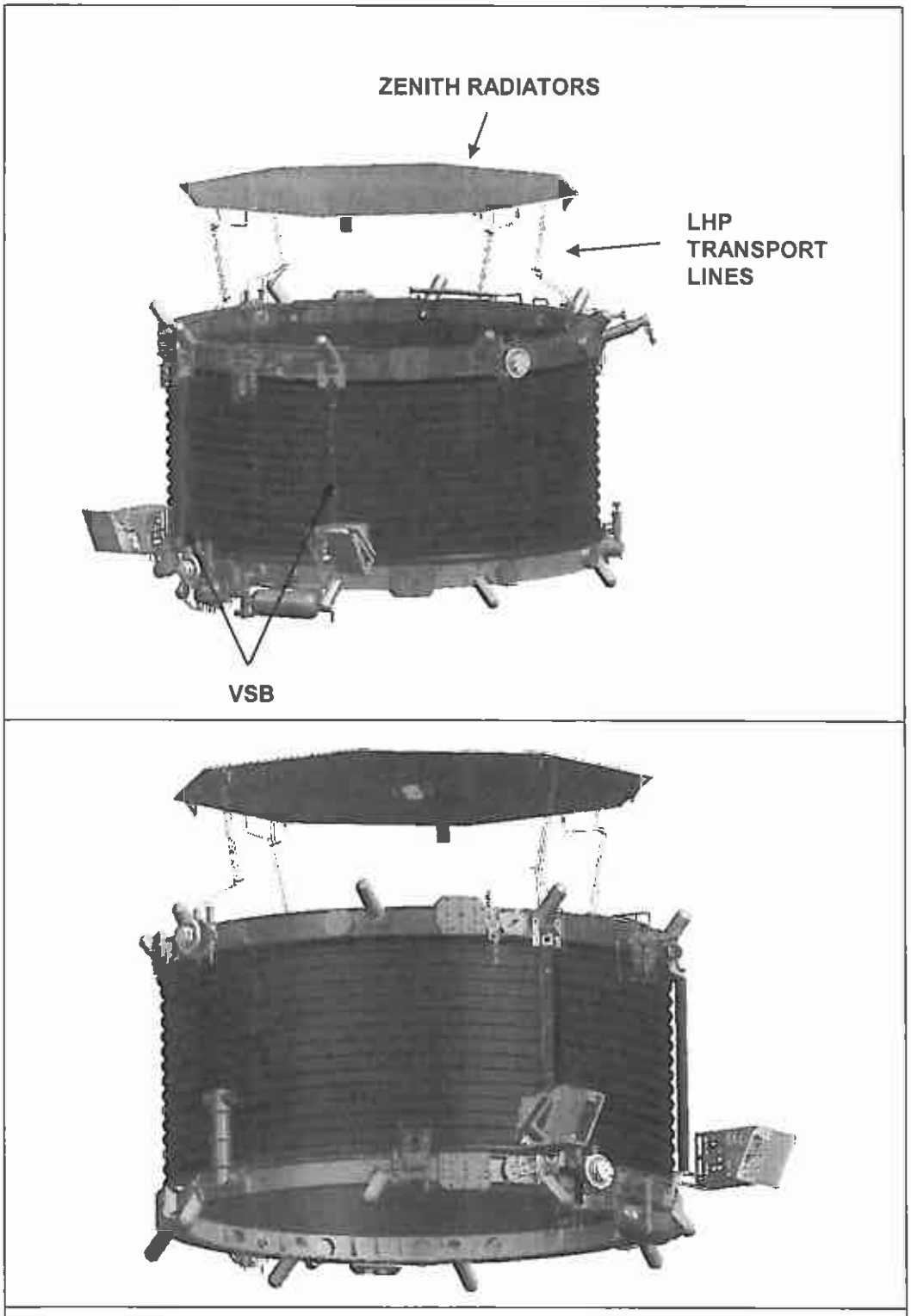

Figure 4-2: CRYO TCS system and VSB view positioned on the vacuum case

Next table lists the items verified in the analyses reported in the present document.

Questo documento contiene informazioni di proprietà di CARLO GAVAZZI SPACE SpA. Tutti i diritti sono riservati.
All information contained in this document are property of CARLO GAVAZZI SPACE SpA. All right reserved.

ITEM	DRAWING NUM	MATERIAL	FAILURE MODE	REMARKS	PAGE
Z BKT	40-AMS02TCS-250.00.00 40-AMS02TCS-250.00.00	GFRP	strength		95
STIFF BKT	40-AMS02TCS-210.01.03	Al 7075 T7351	strength		76
GPS ANTENNA SUPPORT	40-AMS02TCS-200.00.01	Al 7075 T7351	strength		77
ZENITH RADIATOR PANEL	40-AMS02TCS-220.01.01 40-AMS02TCS-220.01.03 40-AMS02TCS-220.01.06 40-AMS02TCS-220.01.02	Al 2024 T81 ROHACELL 51WF	strength		78, 79
LHP CONDENSER LINE	40-AMS02TCS-220.01.04 40-AMS02TCS-220.01.05	Al 3003 O	strength		81
SPOKES	40-AMS02TCS-240.00.00	Ti 6Al 4V GFRP	strength buckling		85
BIMETALLIC SUPPORT BKT	40-AMS02TCS-220.01.12	PEEK-1000	strength		86
LHP TRANSPORT LINE		AISI 316L - O	strength		87
LHP TRD BKT		PEEK-1000	strength		89
VSB SUPPORTS	40-AMS02TCS-281.00.02 40-AMS02TCS-281.00.03	Al 7075 T7351	strength		90
VSB BODY	40-AMS02TCS-281.00.01	CFRP	strength		97
VSB COVER	40-AMS02TCS-281.00.07	CFRP	strength		96
LHP VSB STAND-OFF	40-AMS02TCS-281.00.18	PEEK-1000	strength		93
LHP VSB BKT	40-AMS02TCS-281.00.12 40-AMS02TCS-281.00.13 40-AMS02TCS-281.00.14 40-AMS02TCS-283.00.04 40-AMS02TCS-283.00.05 40-AMS02TCS-283.00.06	PEEK-1000	strength		91
LHP VSB3 UPPER BKT		PEEK-1000	strength		94

Table 4-1: Verified items – 1 of 2

Questo documento contiene informazioni di proprietà di CARLO GAVAZZI SPACE SpA. Tutti I diritti sono riservati.
All information contained in this document are property of CARLO GAVAZZI SPACE SpA. All right reserved.

ITEM	DRAWING NUM	MATERIAL	FAILURE MODE	REMARKS	PAGE
Z-BRACKET/ RADIATOR JOINT	NAS 1351	A286	strength		103
Z-BRACKET/TRD JOINT	NAS 1351	A286	strength		103
STIFF BKT/RADIATOR JOINT	NAS 1351	A286	strength		108
STIFF BKT/TRD JOINT	NAS 1351	A286	strength		108
SPOKES/RADIATOR JOINT		Ti 6Al 4V	strength		114
SPOKES/TRD JOINT		Ti 6Al 4V	strength		114
GPS ANTENNA SUPPORT/TRD JOINT	NAS 1351	A286	strength		118
GPS ANTENNA/GPS ANTENNA SUPPORT JOINT	M3	A2-70	strength		122
VSB - VACUUM CASE JOINT	NAS 1351	A286	strength		125
VSB BODY / LHP VSB BKT JOINT	NAS 1102	A286	strength		128
VSB SUPPORTS/ LHP VSB STAND-OFF JOINT	M5	A2-70	strength		131
VSB BODY/VSB COVER	NAS 1351	A286	strength		134
BIMETALLIC SUPPORT BKT/RADIATOR JOINT	NAS 1351	A286	strength		137
VSB SUPPORTS/VSB BODY JOINT	MS 20426	Al2117-T4	strength		140

Table 4-2: Verified items – 2 of 2

FAILURE	VERIFICATION APPLIED
Strength	Von Mises on shell
	Maximum combined on bar
	See Annex 1 for bolt verification
	Forces on Zenith Radiator inserts
	Forces on Zenith Radiator bonded junction
	Forces on bimetallic joints
Buckling	Local buckling (stress and forces hand calculation)

Table 4-3: Strength and buckling verification explanation

Questo documento contiene informazioni di proprietà di CARLO GAVAZZI SPACE SpA. Tutti i diritti sono riservati.
All information contained in this document are property of CARLO GAVAZZI SPACE SpA. All right reserved.

5. CRYO TCS ZENITH RADIATORS AND VSB FEM DESCRIPTION

The structure of the CRYO TCS Zenith Radiators and VSB is modelled in a single FE Model (AMS_ZR_FINAL_080306.bdf).
Only the VSB1 has been modelled since this is the worst VSB from the structural point of view; in particular the VSB1 has more mass attached on, therefore it will have lower frequencies and higher stress (wrt inertial loads) than the other VSB.
In the following image a view of the CRYO TCS Zenith Radiators and VSB1 FE model is presented.

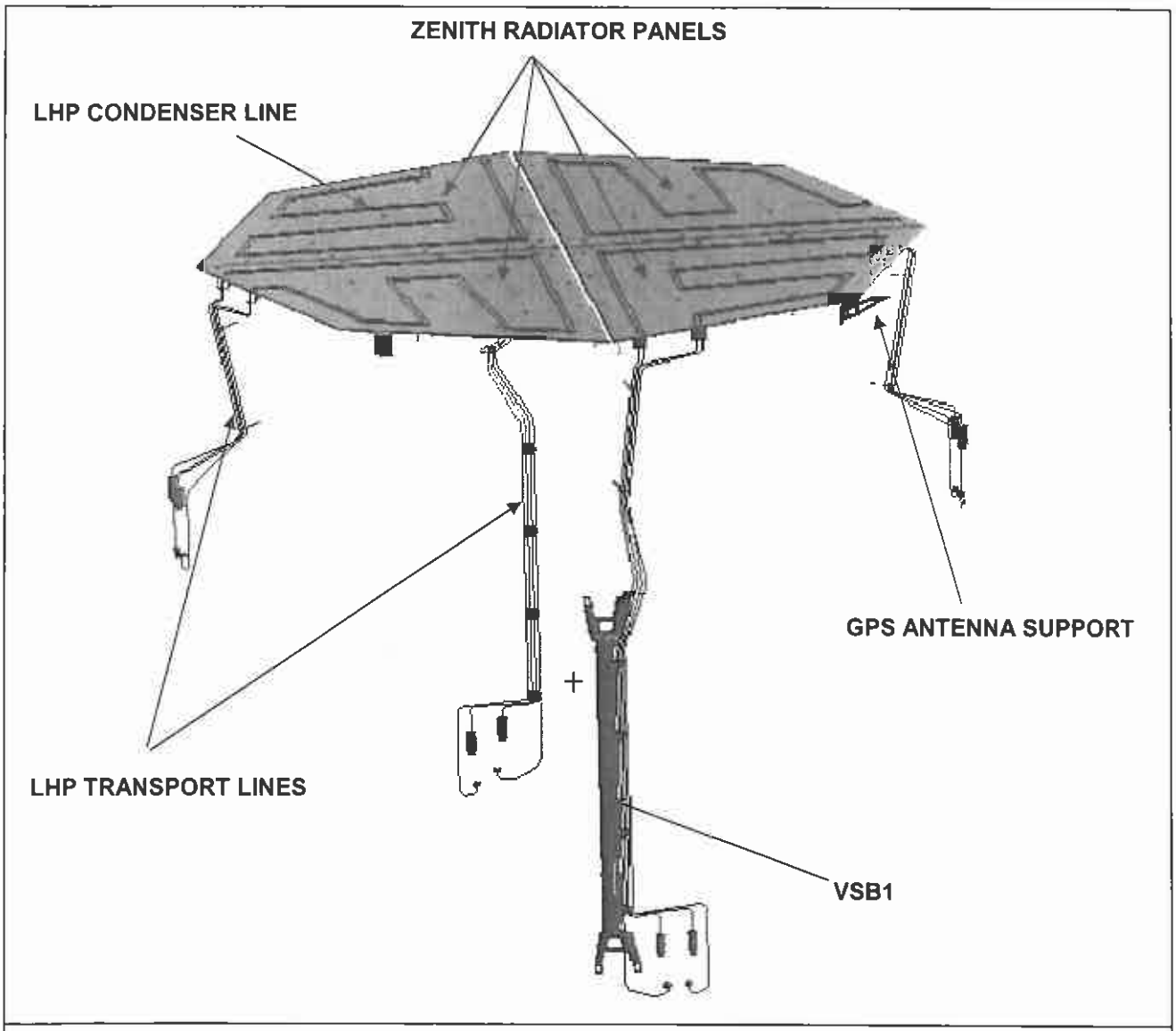

Figure 5-1: General view of the CRYO TCS Zenith Radiators and VSB FE model

In the following chapters the structural Finite Element Model is described.

5.1 USED SOFTWARE

The software used for FEM pre and post processing is MSC/PATRAN 2005r2.
The software used for Finite Element analysis is MSC/NASTRAN V2005.

Questo documento contiene informazioni di proprietà di CARLO GAVAZZI SPACE SpA. Tutti i diritti sono riservati.
All information contained in this document are property of CARLO GAVAZZI SPACE SpA. All right reserved.

5.2 MODEL UNITS

Default FEM units (otherwise specified) are:

- Length [m]
- Mass [Kg]
- Force [N]
- Moment [Nm]
- Materials density [Kg/m^3]
- Young's module [N/m^2]
- Stress [N/m^2]
- Displacements [m]

5.3 MODEL COORDINATE SYSTEM

For the Main Radiators model, the AMS-02 coordinate system (Coord 0 in Figure 5-2) is used:

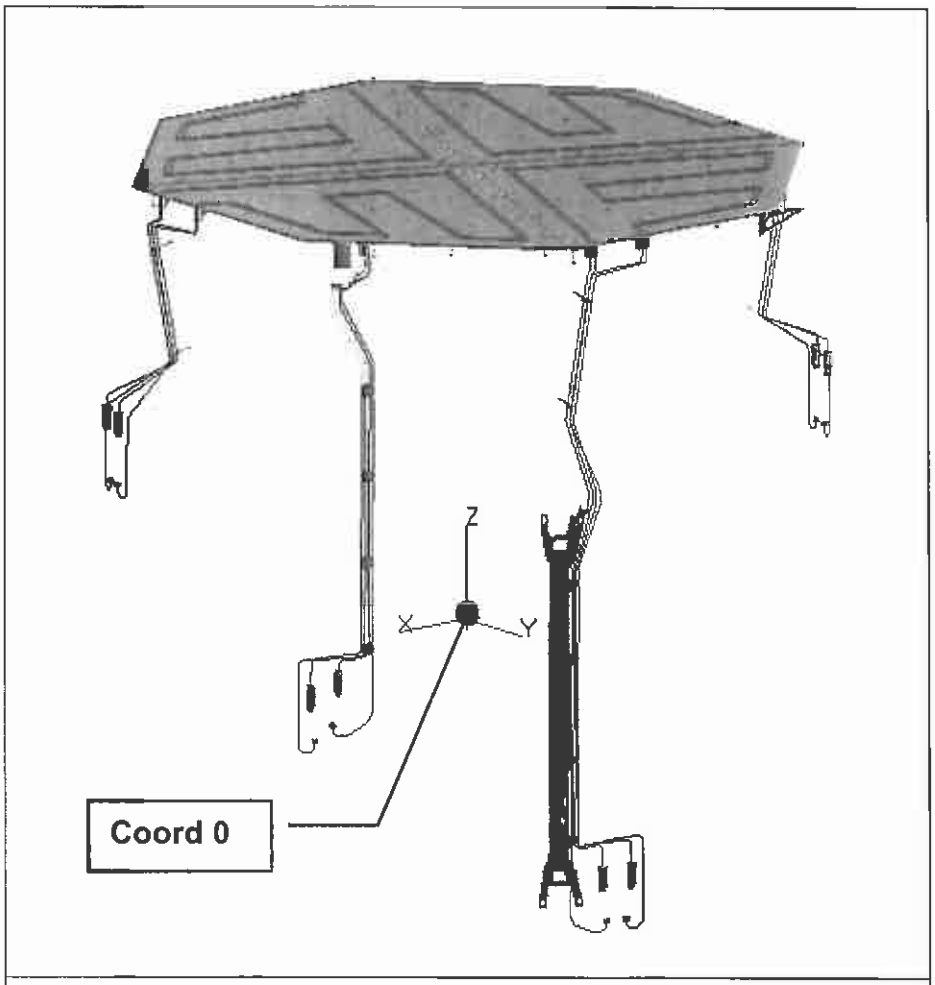

Figure 5-2: AMS-02 coordinate system

Questo documento contiene informazioni di proprietà di CARLO GAVAZZI SPACE SpA. Tutti i diritti sono riservati.
All information contained in this document are property of CARLO GAVAZZI SPACE SpA. All right reserved.

Next image shows the CRYO TCS Zenith Radiators FE model dimensions and position with respect to the AMS coordinate system.

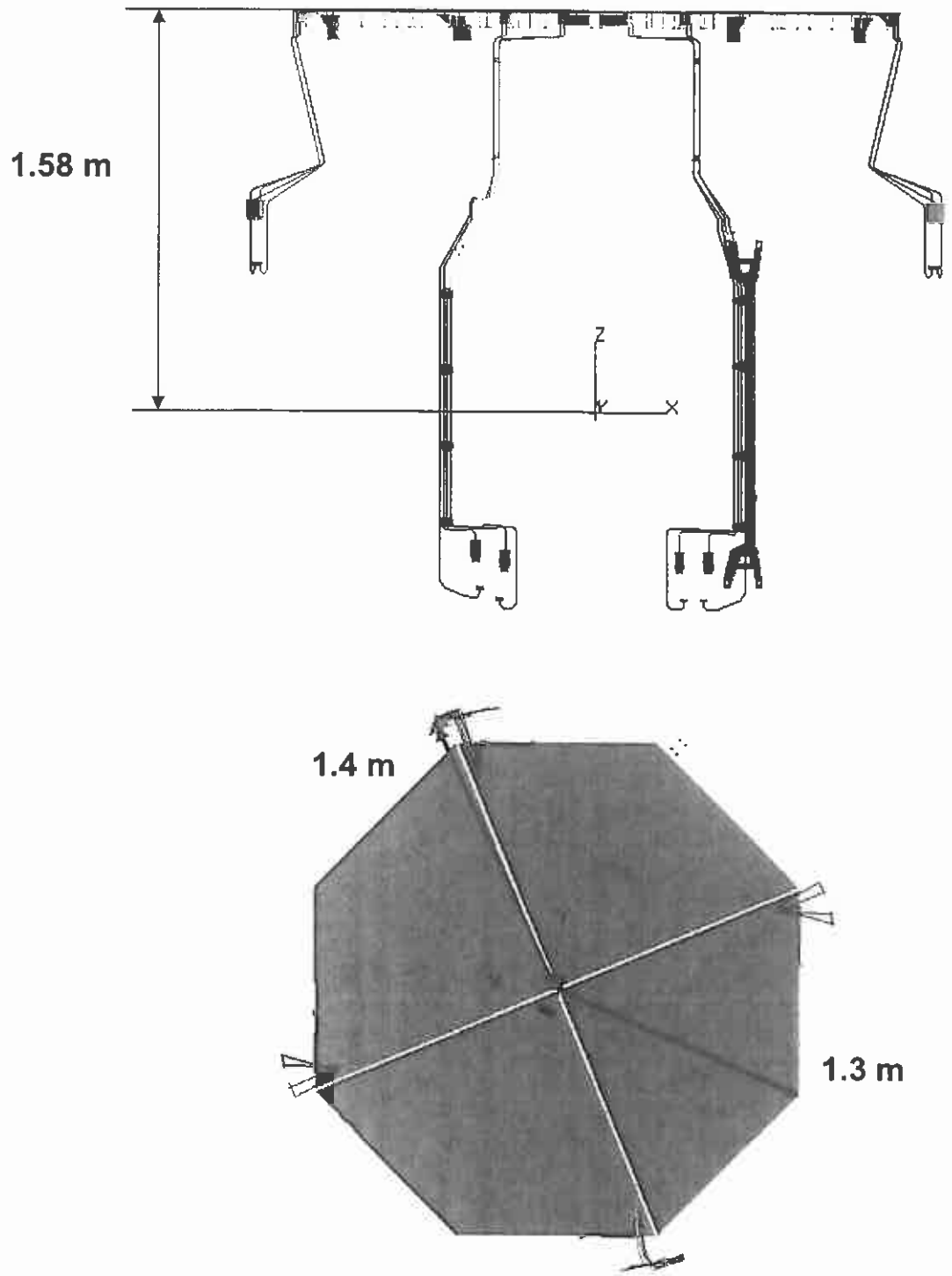

Figure 5-3: CRYO TCS Zenith Radiators and VSB dimensions wrt AMS coordinate system

Questo documento contiene informazioni di proprietà di CARLO GAVAZZI SPACE SpA. Tutti i diritti sono riservati.
All information contained in this document are property of CARLO GAVAZZI SPACE SpA. All right reserved.

5.4 MODEL MATERIALS

In the following tables there are reported:

- properties of each material
- items material
- corresponding NASTRAN card

5.4.1 AL 2024 T81

2024 Aluminium Alloy		
Source	MIL-HDBK-5H	
Specification	AMS-QQ-A-250/4	
Form	Sheet	
Temper	T81	
Thickness [in]	0.010 - 0.249	
Mechanical Properties		
	[MPa]	**[ksi]**
Ftu	461.95	67
Fty	399.90	58
Fcy	399.90	58
Fsu	275.79	40
Fbru	689.48	100
Fbry	572.26	83
E	72395	10500
Physical Properties		
	[kg/m^3]	**[lb/in^3]**
ρ	2768	0.1
ν	0.33	

Table 5-1: AL 2024 T81 properties

NASTRAN CARD:	MAT1 7 7.24+10 2.722+10.33 2768. 2.17-5 293.15
USED ON ITEMS	ZENITH RADIATOR UPPER AND LOWER SKINS

Table 5-2: AL 2024 T81 in FE model

Questo documento contiene informazioni di proprietà di CARLO GAVAZZI SPACE SpA. Tutti i diritti sono riservati.
All information contained in this document are property of CARLO GAVAZZI SPACE SpA. All right reserved.

5.4.2 ROHACELL 51WF

ROHACELL 51WF		
Source	Vendor datasheet	
Form		
Mechanical Properties		
	[MPa]	[ksi]
Ftu	1.9	0.28
Fcu	0.9	0.13
Fsu	0.8	0.12
E11	70.0	10.15
E22	70.0	10.15
G13	19	2.76
G23	19	2.76
G12	19.0	2.76
Physical Properties		
	[kg/m^3]	[lb/in^3]
ρ	52	0.00188

Table 5-3: ROHACELL properties

NASTRAN CARD:	`MAT1 9 7.5+7 2.4+7 .49 52. 2.7-5 293.15`
USED ON ITEMS	ZENITH RADIATOR PANELS CORE

Table 5-4: ROHACELL in FE model

In main radiator there is a 10 mm thick layer of Rohacell between the 1.6 mm thick upper and the 0.3 mm lower skins.

Aluminium skin and Rohacell core are joined with EC2216 curing film adhesive type. Considered lap shear stress, used for bonding failure index calculation, is 17 MPa, taken from EC2216 datasheet.

Questo documento contiene informazioni di proprietà di CARLO GAVAZZI SPACE SpA. Tutti i diritti sono riservati.
All information contained in this document are property of CARLO GAVAZZI SPACE SpA. All right reserved.

5.4.3 AL 7075 T7351

7075 Aluminium Alloy		
Source	MIL-HDBK-5H	
Specification	AMS 4078 and AMS-QQ-A-250/12	
Form	Plate	
Temper	T7351	
Thickness [in] (mm)	0.250 - 0.499 (6.35 - 12.675)	
Basis	S	
High resistance to SCC, according to ECSS-Q-70-36A		
Mechanical Properties		
	[MPa]	**[ksi]**
Ftu	468.84	68
Fty	393.00	57
Fcy	386.11	56
Fsu	262.00	38
Fbru	703.27	102
Fbry	544.69	79
E	71016	10300
Physical Properties		
	[kg/m^3]	**[lb/in^3]**
ρ	2796	0.101
ν	0.33	

Table 5-5: AL 7075 T7351 properties

NASTRAN CARD:	`MAT1 4 7.016+102.638+10.33 2796. 2.17-5 293.15`
USED ON ITEMS:	STIFF BKT GPS ANTENNA SUPPORT VSB SUPPORTS

Table 5-6: Al 7075 T7351 in FE model

Different NASTRAN card have been used to model different parts.
Different allowable stress have been used in verification taking into account for each part specifications and thicknesses.

Questo documento contiene informazioni di proprietà di CARLO GAVAZZI SPACE SpA. Tutti i diritti sono riservati.
All information contained in this document are property of CARLO GAVAZZI SPACE SpA. All right reserved.

5.4.4 TI-6AL-4V

TI-6AL-4V		
Source	MIL-HDBK-5H	
Specification	AMS 4928	
Form	Bar	
Basis	A	
Mechanical Properties		
	[MPa]	**[ksi]**
Ftu	861.84	125
Fty	786.00	114
Fcy	889.42	129
Fsu	565.37	82
Fbru	1378.95	200
Fbry	1220.37	177
E	116521	16900
Physical Properties		
	[kg/m^3]	**[lb/in^3]**
ρ	4428.8	0.16
ν	0.31	

Table 5-7: Ti-6AL-4V properties

NASTRAN CARD:	`MAT1 10 1.165+114.447+10.31 4428.8 8.86-6 293.15`
USED ON ITEMS:	SPOKES ROD UPPER AND LOWER ROD ENDS

Table 5-8: Ti-6AL-4V in FE model

Questo documento contiene informazioni di proprietà di CARLO GAVAZZI SPACE SpA. Tutti i diritti sono riservati.
All information contained in this document are property of CARLO GAVAZZI SPACE SpA. All right reserved.

5.4.5 PEEK 1000

Peek 1000		
Source	Matweb	
Specification	ASTM D638 ASTM D790	
Mechanical Properties		
	[Mpa]	[ksi]
Ftu	110	16
Fcu	138	20
E	4344	630
G	4137	600
Physical Properties		
	[kg/m^3]	[lb/in^3]
ρ	1310	0.0473
ν	NA	

Table 5-9: Peek 1000 properties

NASTRAN CARD:	`MAT1 6 4.34+9 4.14+9 -.4758461309. 4.68-5 293.15` `1.1+8 1.38+8 5.52+7`
USED ON ITEMS:	BIMETALLIC SUPPORT BKT LHP TRD BKT LHP VSB STAND-OFF LHP VSB BKT

Table 5-10: Peek 1000 in FE model

Questo documento contiene informazioni di proprietà di CARLO GAVAZZI SPACE SpA. Tutti i diritti sono riservati.
All information contained in this document are property of CARLO GAVAZZI SPACE SpA. All right reserved.

5.4.6 AL3103

3103 Aluminium Alloy		
Source	Vendor Datasheet	
Specification	EN 754-2	
Form	Drawn tube	
Temper	O	
Diameter	< 20 mm	
Mechanical Properties		
	[MPa]	**[ksi]**
Ftu	95.00	13.8
Fty	35.00	5.1
Fcy	35.00	5.1
E	68900	9993.1
Physical Properties		
	[kg/m^3]	**[lb/in^3]**
ρ	2730	0.118
ν	0.33	

Table 5-11: Al 3103 properties

NASTRAN CARD:	`MAT1 2 6.89+10 2.5+10 .33 2730. 2.17-5 293.15`
USED ON ITEMS:	LHP CONDENSER LINE

Table 5-12: Al 3103 in FE model

Questo documento contiene informazioni di proprietà di CARLO GAVAZZI SPACE SpA. Tutti i diritti sono riservati.
All information contained in this document are property of CARLO GAVAZZI SPACE SpA. All right reserved.

5.4.7 AISI316L

AISI 316 STAINLESS STEEL		
Source	Vendor datasheet	
Specification	ASTM A-632-04	
Condition	Annealed	
Form	Hydraulic Tubing	
Mechanical Properties		
	[MPa]	[ksi]
Ftu	557.00	80.79
Fty	303.00	43.95
Fcy	303.00	43.95
E	193053.25	28000
Physical Properties		
	[kg/m^3]	[lb/in^3]
ρ	8000.00	0.347
ν	0.28	

Table 5-13: AISI 316L properties

NASTRAN CARD:	`MAT1 1 1.93+11 7.539+10.28 8000. 15.19-5 293.15`
USED ON ITEMS:	LHP TRANSPORT LINES

Table 5-14: AISI 316L in FE model

Questo documento contiene informazioni di proprietà di CARLO GAVAZZI SPACE SpA. Tutti i diritti sono riservati.
All information contained in this document are property of CARLO GAVAZZI SPACE SpA. All right reserved.

5.4.8 CARBON FIBRE

CFRP		
Source	Vendor datasheet	
Specification	EMS53182	
	TY.1 CL.5 GR.C CA.B	
Fiber Producer	CYTEC	
Form	Harness	
Ply thickness [mm]	0.348	
Mechanical Properties		
	[MPa]	**[ksi]**
Ftu11, Ftu22	689	100
Fcu11, Fcu22	551	80
Fsu	55	8
Et11, Et22	62000	8992
Ec11, Ec22	55000	7977
Ebend	62000	8992
G	3100	450
Physical Properties		
	[kg/m^3]	**[lb/in^3]**
ρ	1700	0.051
ν	0.06	

Table 5-15: CFRP plain wave properties

NASTRAN CARD:	MAT8 3 6.205+105.516+10.06 3.1+9 3.1+9 3.1+9 1700. 2.-6 2.-6 6.8948+85.5158+86.8948+85.5158+85.5158+7
USED ON ITEMS	VSB BODY VSB COVER

Table 5-16: CFRP in FE model

Fibres have been combined in the way reported in next table (0° means alignment to VSB body and cover main direction).

Ply	Type	Direction
1	EMS53182	0
2	EMS53182	0
3	EMS53182	+45°
4	EMS53182	+45°
5	EMS53182	0
6	EMS53182	0

Table 5-17: VSB body and cover ply layup

Questo documento contiene informazioni di proprietà di CARLO GAVAZZI SPACE SpA. Tutti i diritti sono riservati.
All information contained in this document are property of CARLO GAVAZZI SPACE SpA. All right reserved.

5.4.9 GLASS FIBER REINFORCED PLASTIC

GFRP PLAIN WAVE		
Source	Vendor	
Specification	-	
Form	Plain Weave fabric	
Fiber Type	E-Glass	
Ply Thickness [mm]	0.25	
Mechanical Properties		
	[MPa]	[ksi]
Ftu	378	55
Fcu	455	66
Fsu	97	14
Et	41000	5947
Ec	41000	5947
G	5300	769
Physical Properties		
	[kg/m^3]	[lb/in^3]
ρ	2200	0.0954
ν	0.17	

Table 5-18: GFRP plain wave properties

GFRP PULTRUDED		
Source	Vendor	
Specification	-	
Form	Pultruded	
Fiber Type	E-Glass	
Resin Type	SYNOLITE 0612-N-1 (Polyester)	
Ply Thickness [mm]	0.25	
Mechanical Properties		
	[MPa]	[ksi]
Ftu	800	116
Fbending_u	800	116
E	35000	5076
Eflex	35000	5076
G	13400	1944
Physical Properties		
	[kg/m^3]	[lb/in^3]
ρ	2000	0.0867
ν	0.3	

Table 5-19: GFRP pultruded properties

Questo documento contiene informazioni di proprietà di CARLO GAVAZZI SPACE SpA. Tutti i diritti sono riservati.
All information contained in this document are property of CARLO GAVAZZI SPACE SpA. All right reserved.

NASTRAN CARD GFRP PLAIN WAVE	MAT8	5	4.1+10	4.1+10	.17	5.3+9			2200.
		1.-5	1.-5	293.15	3.781+8	4.55+8	3.781+8	4.55+8	9.71+7
			.5						
NASTRAN CARD GFRP PULTRUDED	MAT1	30	3.5+10	1.34+10	.3	2000.	1.-5	293.15	
USED ON ITEMS	Z-BKT SPOKES								

Table 5-20: GFRP in FE model

For the Z-BKT the fibres have been combined in the way reported in next table to build the rods (0° means aligned to Z-BKT main direction).

Ply	Type	Direction
1	GFRP PLAIN WAVE	0
2	GFRP PLAIN WAVE	-45°
3	GFRP PLAIN WAVE	0
4	GFRP PLAIN WAVE	+45°
5	GFRP PLAIN WAVE	0
6	GFRP PLAIN WAVE	-45°
7	GFRP PLAIN WAVE	0
8	GFRP PLAIN WAVE	+45°
9	GFRP PLAIN WAVE	+45°
10	GFRP PLAIN WAVE	0
11	GFRP PLAIN WAVE	-45°
12	GFRP PLAIN WAVE	0
13	GFRP PLAIN WAVE	+45°
14	GFRP PLAIN WAVE	0
15	GFRP PLAIN WAVE	-45°
16	GFRP PLAIN WAVE	0

Table 5-21: VSB body and cover ply disposition

5.4.10 DUMMY MATERIAL FOR BOLTED CONNECTIONS

A dummy material with high stiffness is used for beam elements that represent bolted connections:

The corresponding NASTRAN BULK data card is:

```
MAT1     81     4.1+11  1.577+11.3      1.      1.593-5 293.15
```

Questo documento contiene informazioni di proprietà di CARLO GAVAZZI SPACE SpA. Tutti i diritti sono riservati.
All information contained in this document are property of CARLO GAVAZZI SPACE SpA. All right reserved.

5.5 FEM MODEL COMPONENTS DESCRIPTION

In this chapter the components of the CRYO TCS Zenith Radiators and VSB Finite Element Model are presented:

FE model	
GRID POINTS	67974
ELEMENTS	81753
CBAR	6700
CHEXA	28944
CONM2	93
CPENTA	352
CQUAD4	44805
CTRIA3	568
RBE2	291

Table 5-22: Cryo Tcs Model summary

FE Model subcomponents are listed here and presented in the following chapters.

- Zenith Radiator Panel
- Spokes
- Lhp Condenser Line
- Lhp Transport Line
- Z-Brackets
- Stiff Brackets
- Gps Antenna Support
- Bimetallic Support Brackets
- Lhp Trd Brackets
- Vsb Support
- Vsb Body
- Vsb Cover
- Lhp Vsb Stand-Off
- Lhp Vsb Bracket

Questo documento contiene informazioni di proprietà di CARLO GAVAZZI SPACE SpA. Tutti i diritti sono riservati.
All information contained in this document are property of CARLO GAVAZZI SPACE SpA. All right reserved.

5.5.1 ZENITH RADIATOR

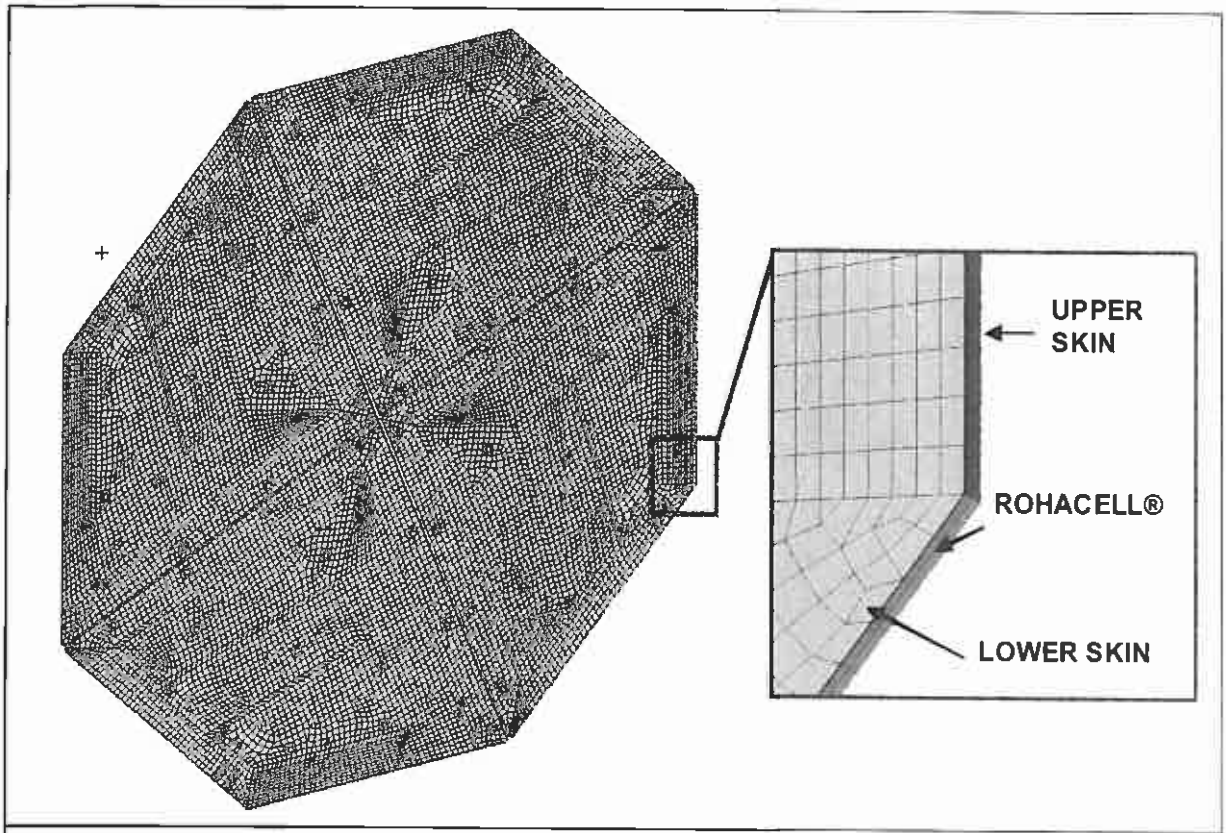

Mass [kg]	Total: 33.0
Material	AL 2024, Rohacell
Thickness range [m]	0.010 : 0.0003
Used fem elements	Shell and Solid

Figure 5-4: Zenith Radiator

Questo documento contiene informazioni di proprietà di CARLO GAVAZZI SPACE SpA. Tutti i diritti sono riservati.
All information contained in this document are property of CARLO GAVAZZI SPACE SpA. All right reserved.

5.5.2 SPOKES

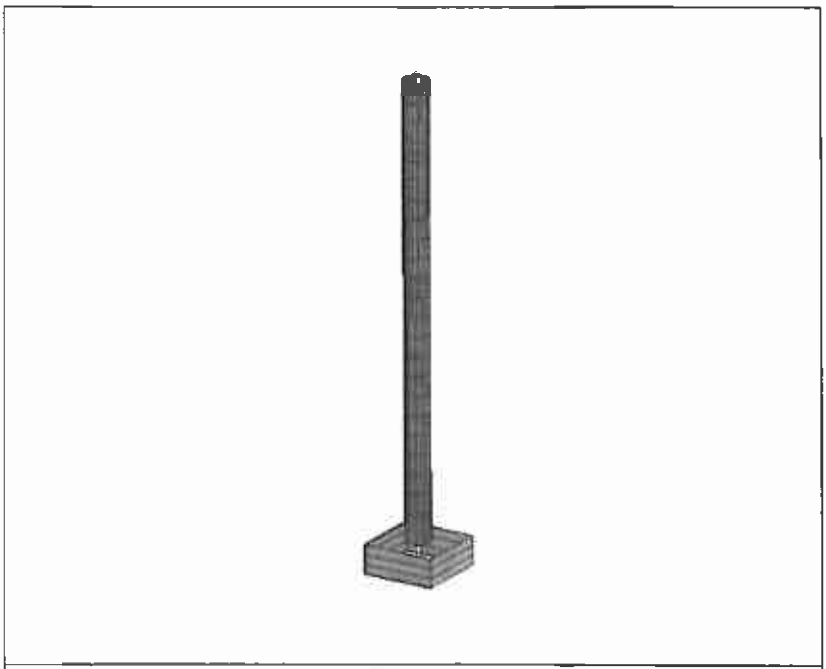

Mass [kg]	Total: 1.68
Material	GFRP, Ti-6AL-4V
Thickness range [m]	0.0015 (radius)
Used fem elements	Bar, conm2

Figure 5-5: Spoke

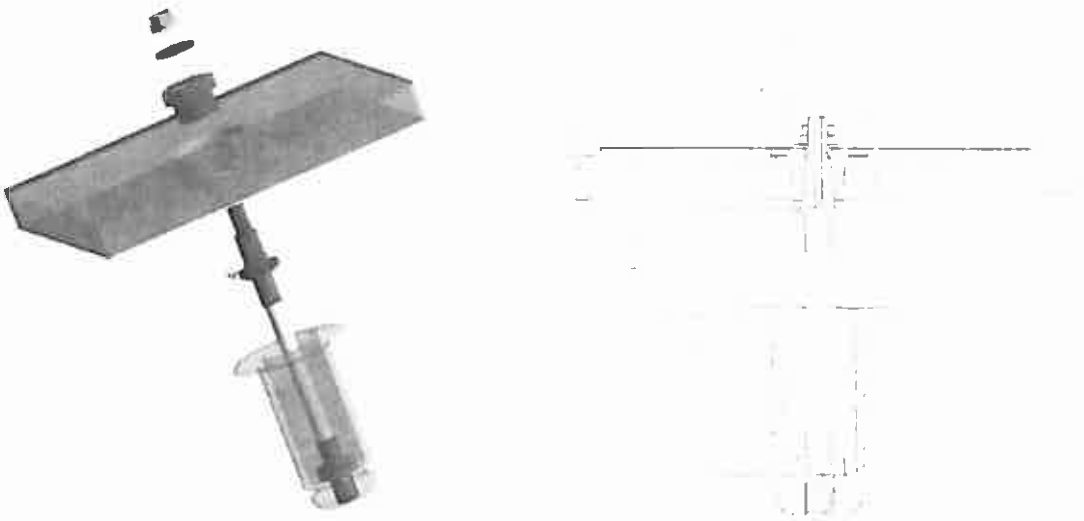

Figure 5-6: Spokes assembly

Questo documento contiene informazioni di proprietà di CARLO GAVAZZI SPACE SpA. Tutti i diritti sono riservati.
All information contained in this document are property of CARLO GAVAZZI SPACE SpA. All right reserved.

5.5.3 LHP CONDENSER LINE

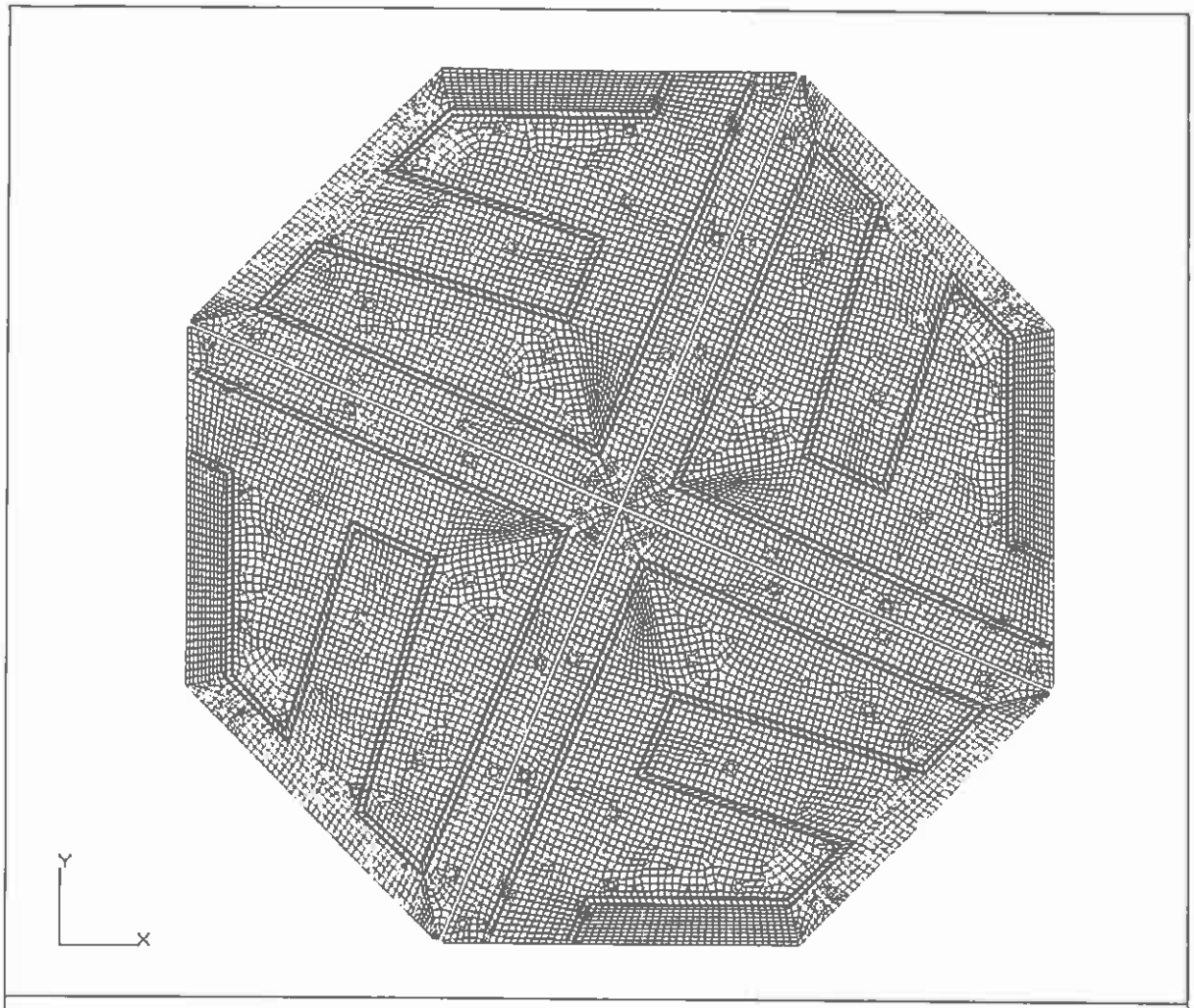

Mass [kg]	0.60
Material	AL 3103
Thickness range [m]	0.0005; (0.002, 0.0015 radius)
Used fem elements	Bar

Figure 5-7: LHP Condenser Line

Questo documento contiene informazioni di proprietà di CARLO GAVAZZI SPACE SpA. Tutti i diritti sono riservati.
All information contained in this document are property of CARLO GAVAZZI SPACE SpA. All right reserved.

5.5.4 LHP TRANSPORT LINE

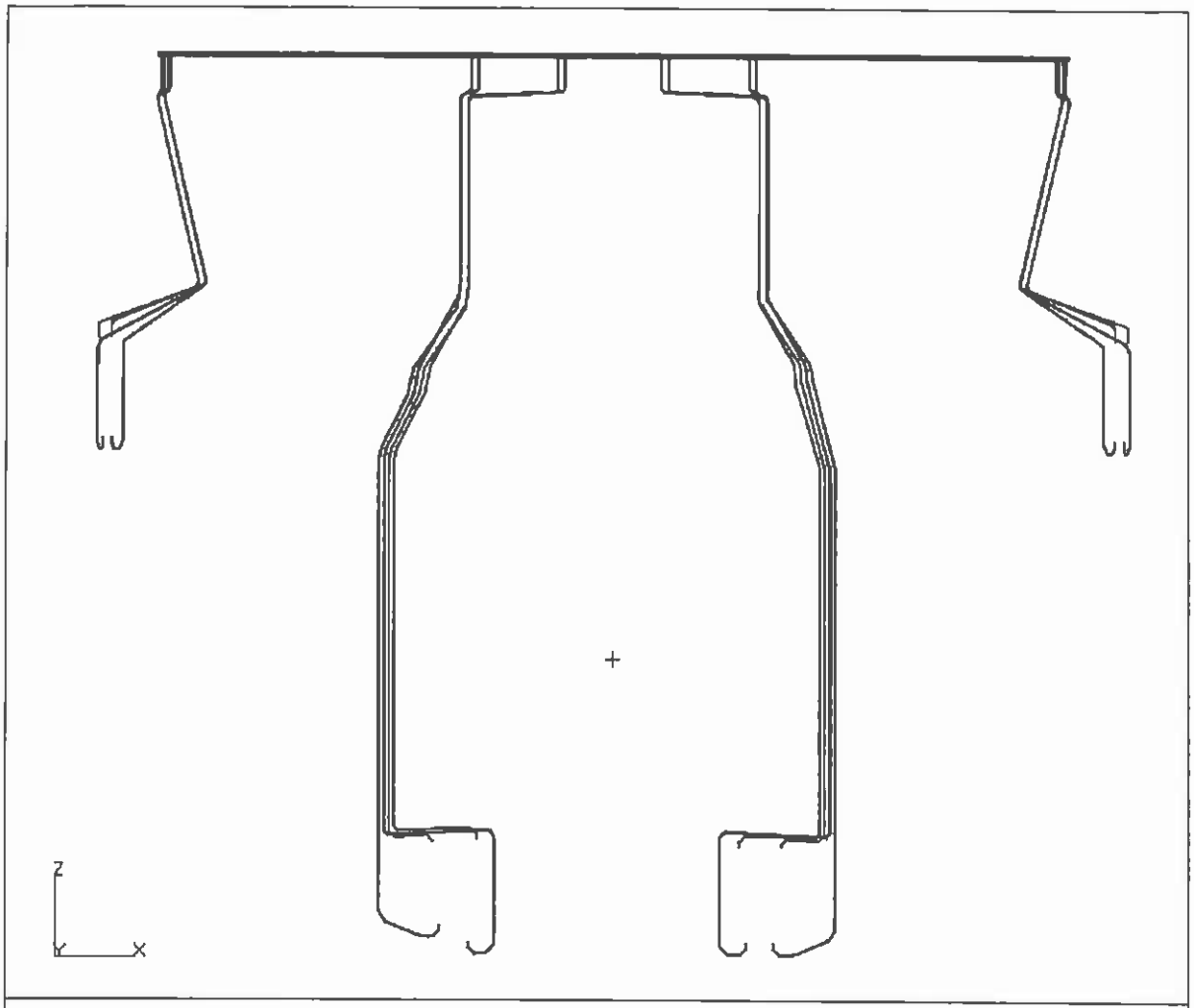

Mass [kg]	1.06
Material	AISI 316
Thickness range [m]	0.0005; (0.002, 0.0015 radius)
Used fem elements	Bar

Figure 5-8: LHP Transport Lines

Questo documento contiene informazioni di proprietà di CARLO GAVAZZI SPACE SpA. Tutti i diritti sono riservati.
All information contained in this document are property of CARLO GAVAZZI SPACE SpA. All right reserved.

5.5.5 Z-BRACKETS

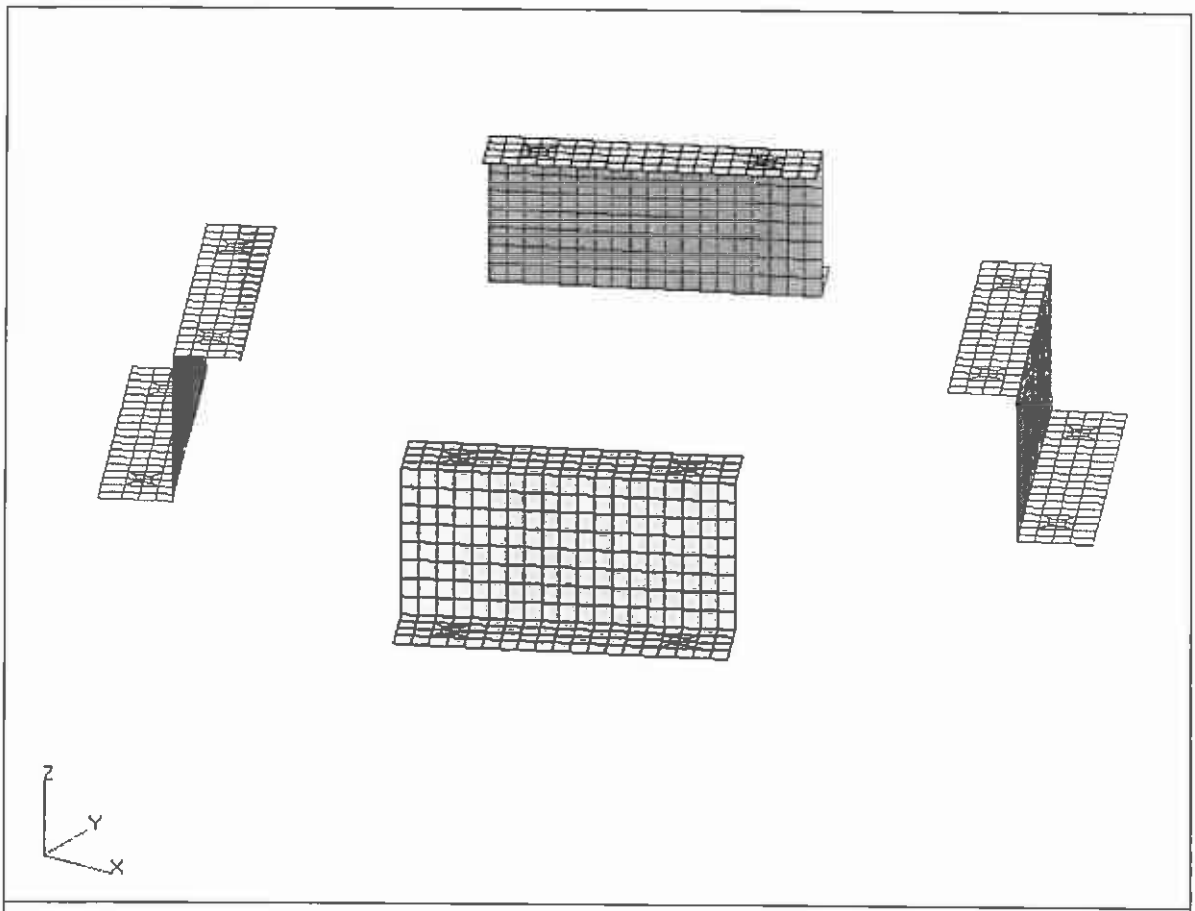

Mass [kg]	0.3
Material	GFRP
Thickness [m]	0.004
Used fem elements	Shell

Figure 5-9: Z-Brackets

Questo documento contiene informazioni di proprietà di CARLO GAVAZZI SPACE SpA. Tutti i diritti sono riservati.
All information contained in this document are property of CARLO GAVAZZI SPACE SpA. All right reserved.

5.5.6 STIFF BRACKETS

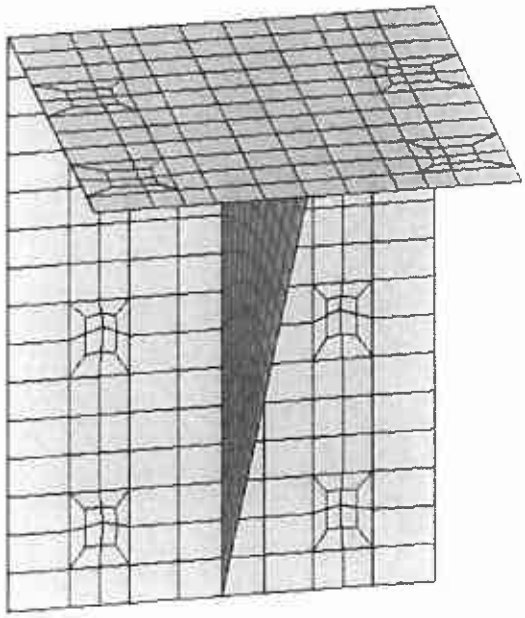

Typical of 4

Total Mass [kg]	1.03 (of 4 brackets)
Material	Peek
Thickness [m]	0.006, 0.004
Used fem elements	Shell

Figure 5-10: Stiff Brackets

Questo documento contiene informazioni di proprietà di CARLO GAVAZZI SPACE SpA. Tutti i diritti sono riservati.
All information contained in this document are property of CARLO GAVAZZI SPACE SpA. All right reserved.

5.5.7 GPS ANTENNA SUPPORT

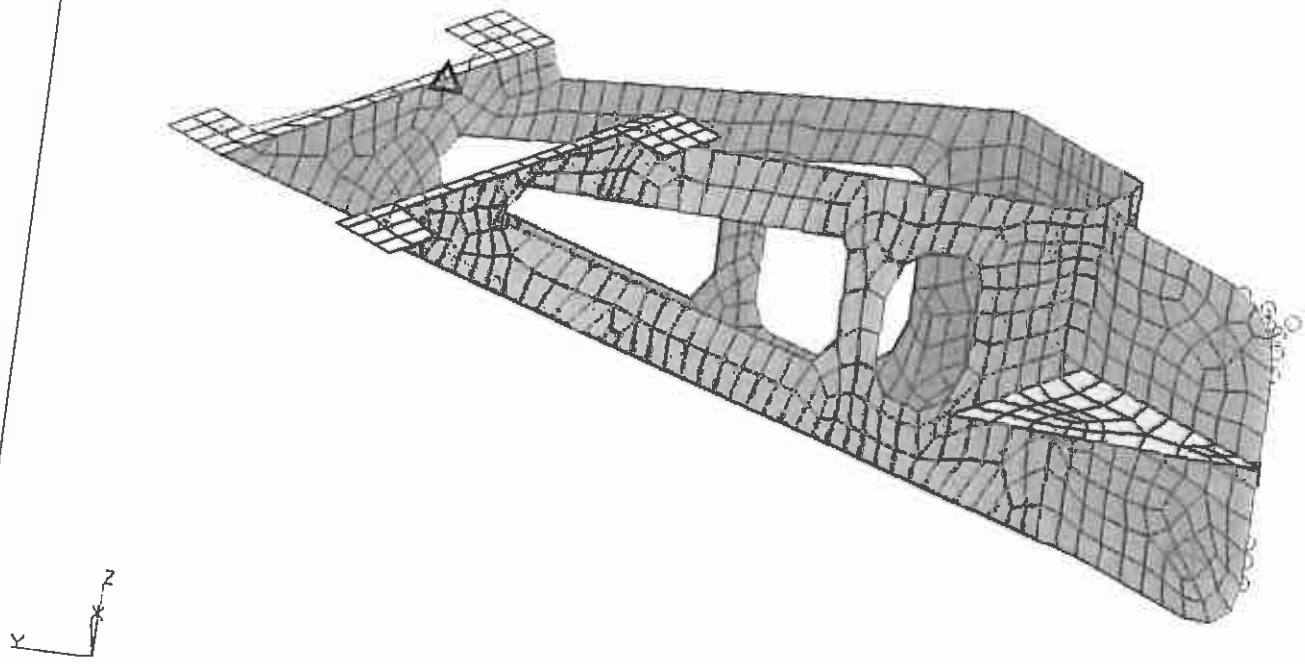

Mass [kg]	0.29
Material	AL 7075 T7351
Thickness [m]	0.006:0.003
Used fem elements	Shell, conm2

Figure 5-11: Gps Antenna Support

Questo documento contiene informazioni di proprietà di CARLO GAVAZZI SPACE SpA. Tutti i diritti
All information contained in this document are property of CARLO GAVAZZI SPACE

5.5.8 BIMETALLIC SUPPORT BRACKETS

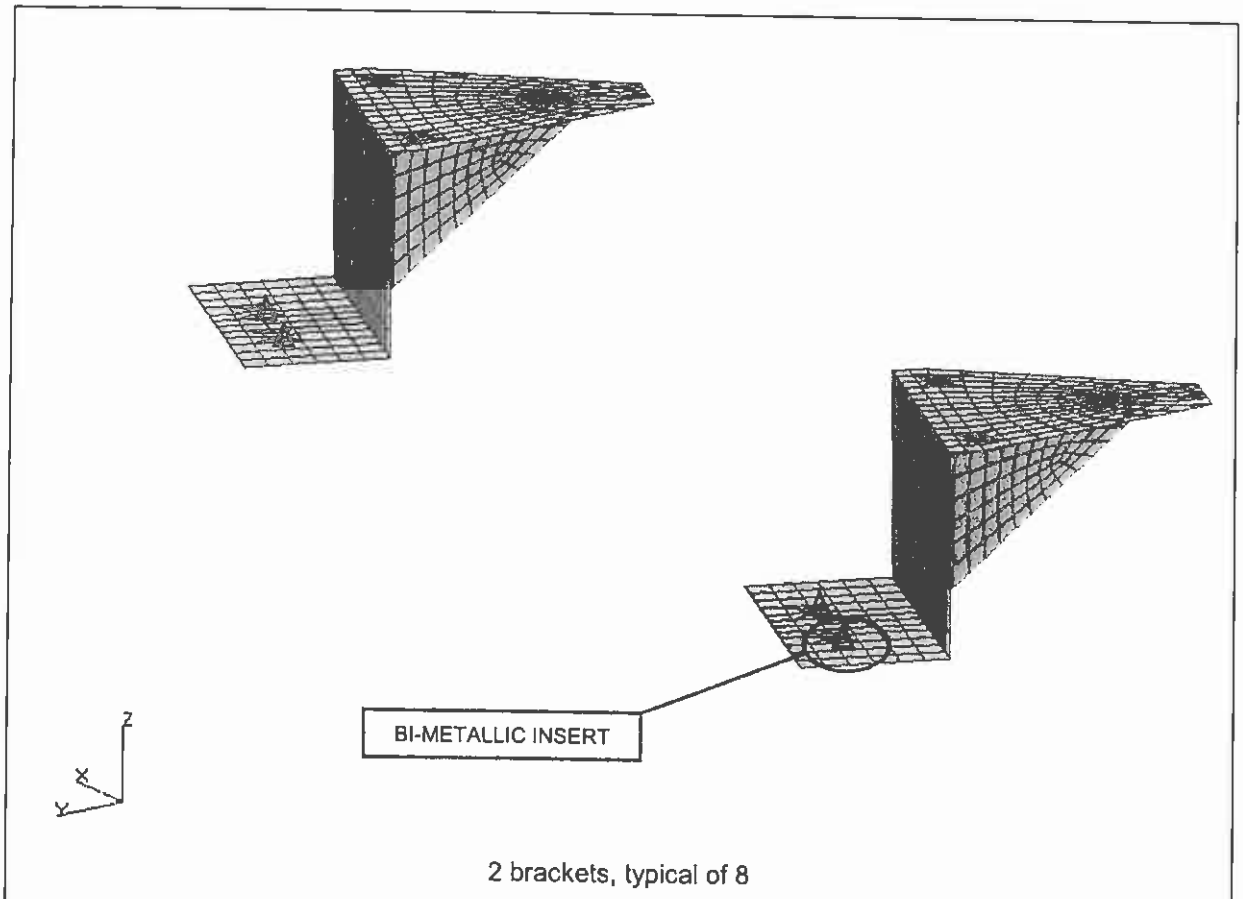

Total Mass [kg]	0.29
Material	Peek
Thickness [m]	0.012:0.004
Used fem elements	Shell, conm2

Figure 5-12: Bimetallic Support Brackets

Each Bimetallic insert is modelled as punctual mass of 0.001 kg (CONM2 element) and it is connected to the bimetallic support bracket with a rigid element (RBE2) with all DoF constrained.

Questo documento contiene informazioni di proprietà di CARLO GAVAZZI SPACE SpA. Tutti i diritti sono riservati.
All information contained in this document are property of CARLO GAVAZZI SPACE SpA. All right reserved.

5.5.9 LHP TRD BRACKETS

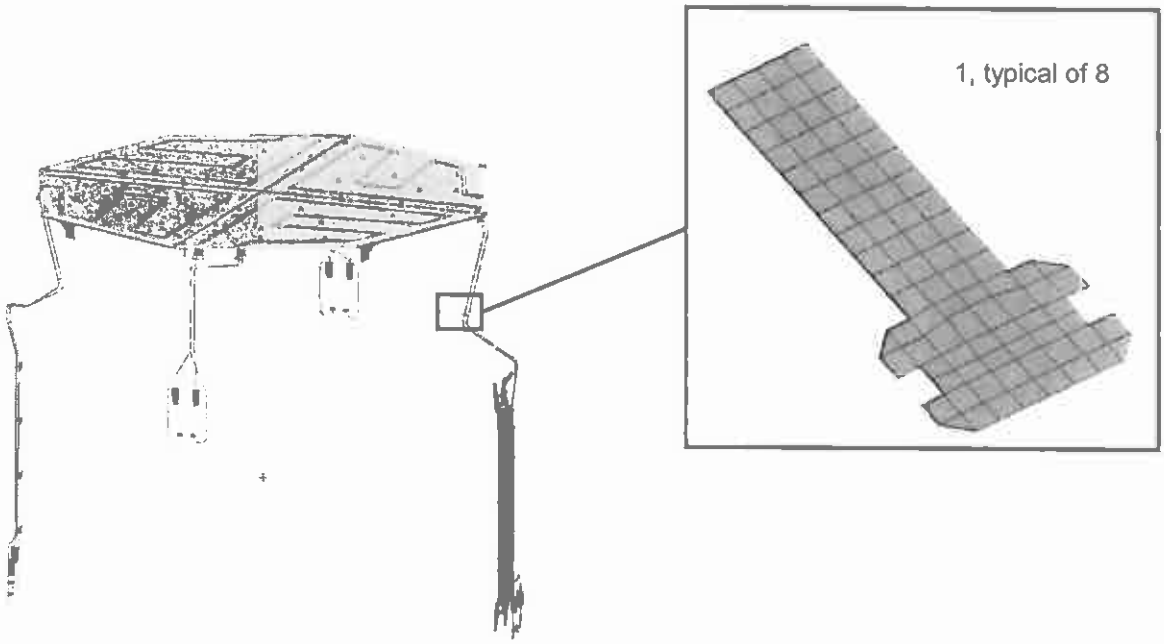

Total Mass [kg]	0.23
Material	Peek
Thickness [m]	0.008
Used fem elements	Shell

Figure 5-13: LHP TRD Brackets

Questo documento contiene informazioni di proprietà di CARLO GAVAZZI SPACE SpA. Tutti i diritti sono riservati.
All information contained in this document are property of CARLO GAVAZZI SPACE SpA. All right reserved.

5.5.10 VSB SUPPORT

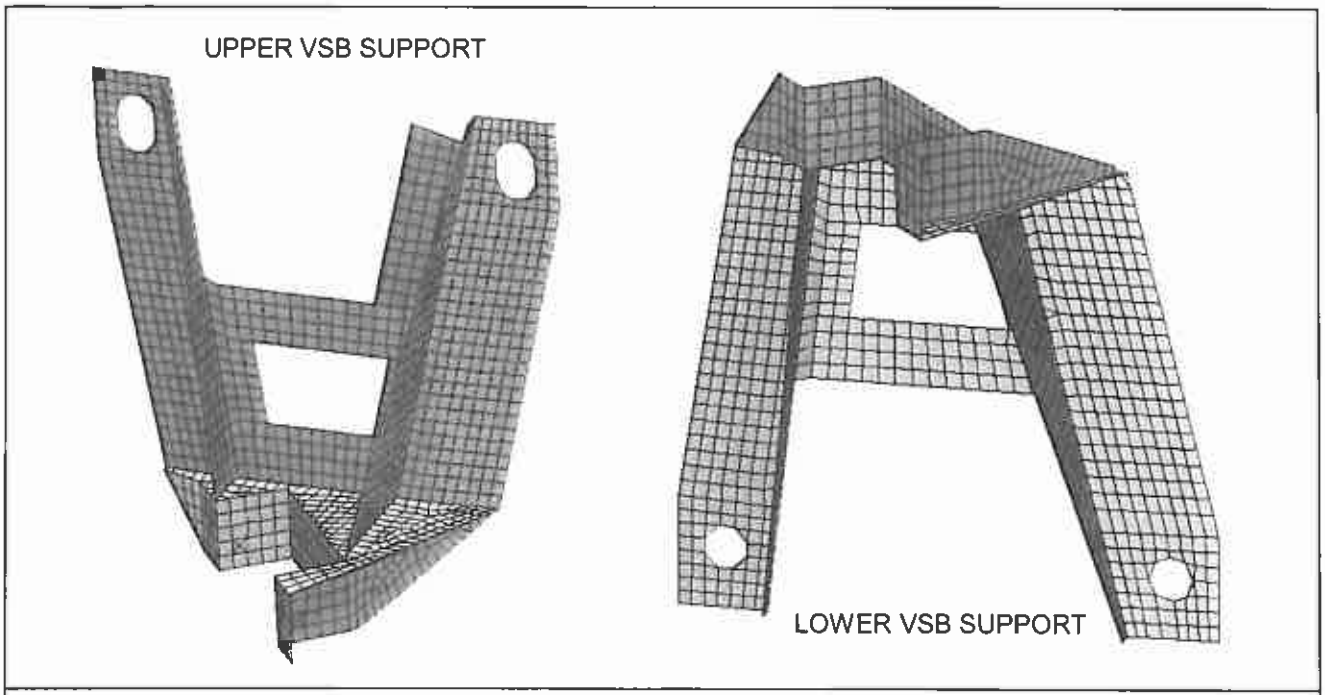

Total Mass [kg]	0.73
Material	AL 7075 T7351
Thickness [m]	0.008:0.0025
Used fem elements	Shell

Figure 5-14: VSB Support

Questo documento contiene informazioni di proprietà di CARLO GAVAZZI SPACE SpA. Tutti i diritti sono riservati.
All information contained in this document are property of CARLO GAVAZZI SPACE SpA. All right reserved.

5.5.11 VSB BODY

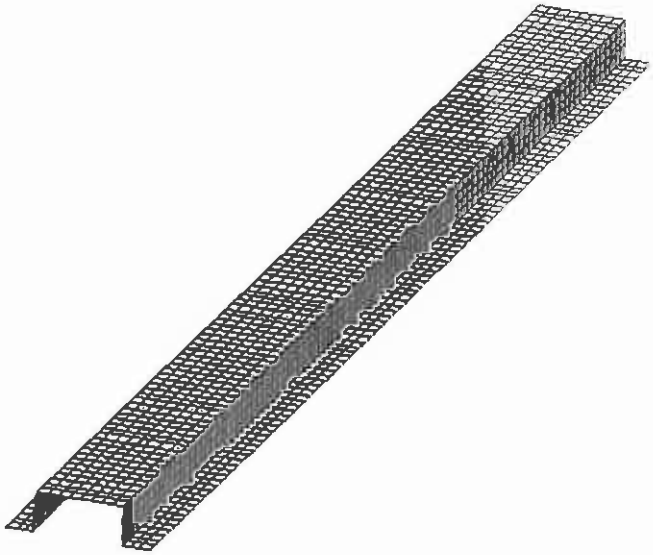

Mass [kg]	0.56
Material	CFRP
Thickness [m]	0.002
Used fem elements	Shell

Figure 5-15: VSB body

Questo documento contiene informazioni di proprietà di CARLO GAVAZZI SPACE SpA. Tutti i diritti sono riservati.
All information contained in this document are property of CARLO GAVAZZI SPACE SpA. All right reserved.

5.5.12 VSB COVER

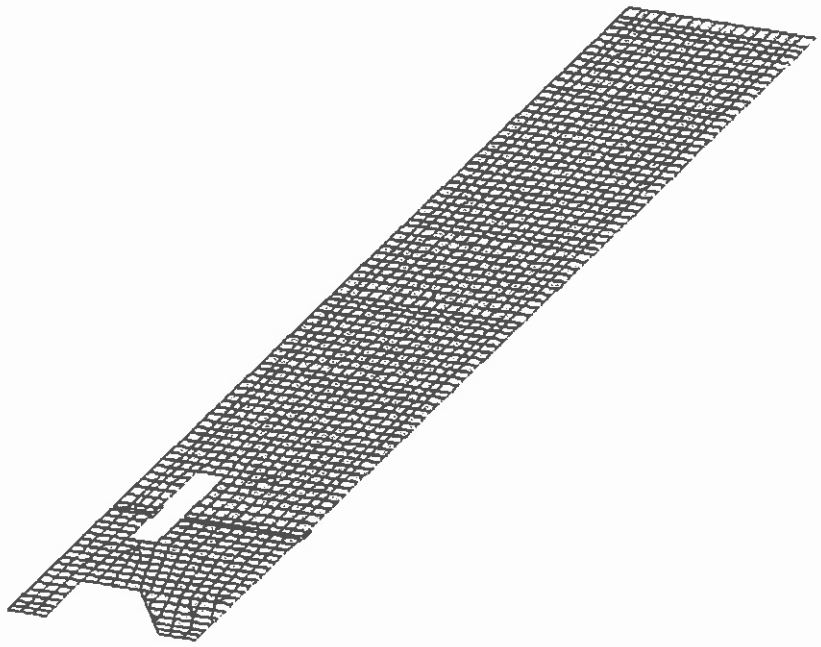

Mass [kg]	0.34
Material	CFRP
Thickness [m]	0.002
Used fem elements	Shell

Figure 5-16: VSB cover

Questo documento contiene informazioni di proprielà di CARLO GAVAZZI SPACE SpA. Tutti i diritti sono riservati.
All information contained in this document are property of CARLO GAVAZZI SPACE SpA. All right reserved.

5.5.13 LHP VSB STAND-OFF

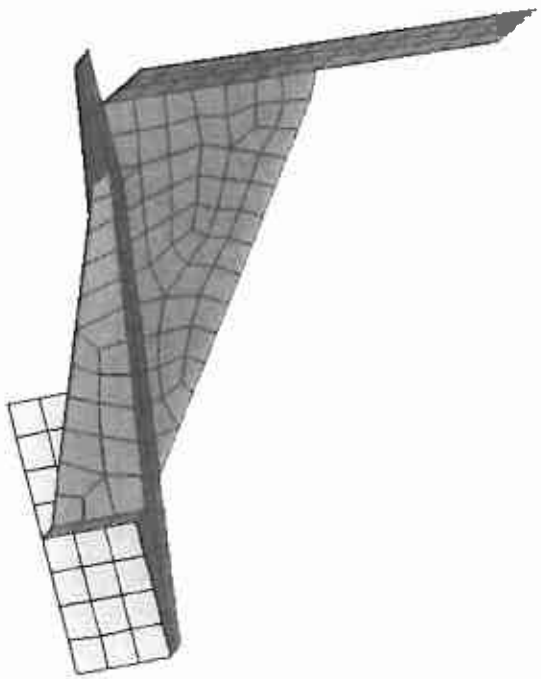

Mass [kg]	0.07
Material	Peek
Thickness [m]	0.02:0.003
Used fem elements	Shell

Figure 5-17: LHP VSB stand-off

Questo documento contiene informazioni di proprietà di CARLO GAVAZZI SPACE SpA. Tutti i diritti sono riservati.
All information contained in this document are property of CARLO GAVAZZI SPACE SpA. All right reserved.

5.5.14 LHP VSB BRACKET

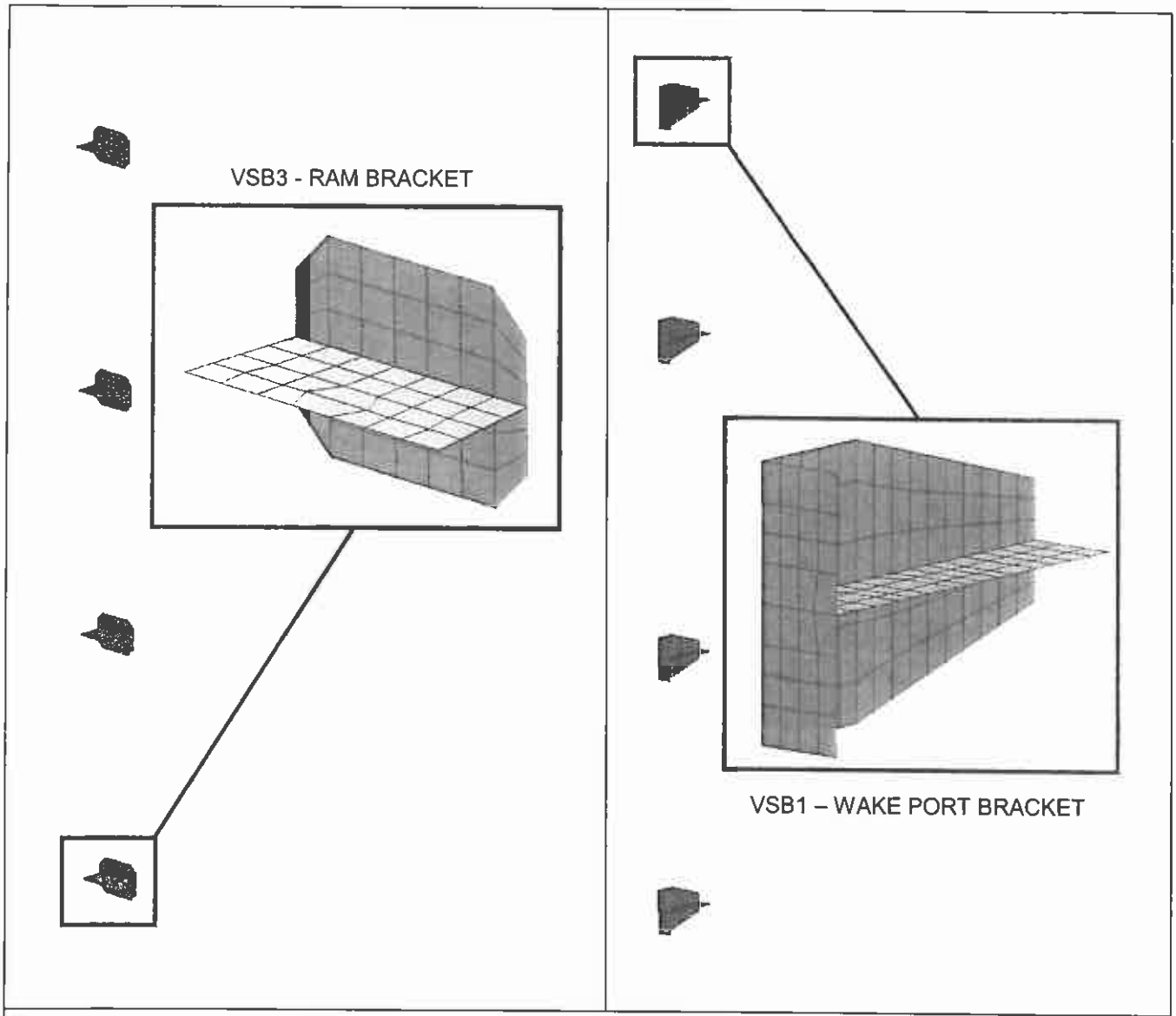

Total Mass [kg]	0.11 (VSB1); 0.12 (VSB3)
Material	Peek
Thickness [m]	0.02:0.001
Used fem elements	Shell

Figure 5-18: LHP VSB bracket

Questo documento contiene informazioni di proprietà di CARLO GAVAZZI SPACE SpA. Tutti i diritti sono riservati.
All information contained in this document are property of CARLO GAVAZZI SPACE SpA. All right reserved.

5.5.15 LHP VSB3 UPPER BKT

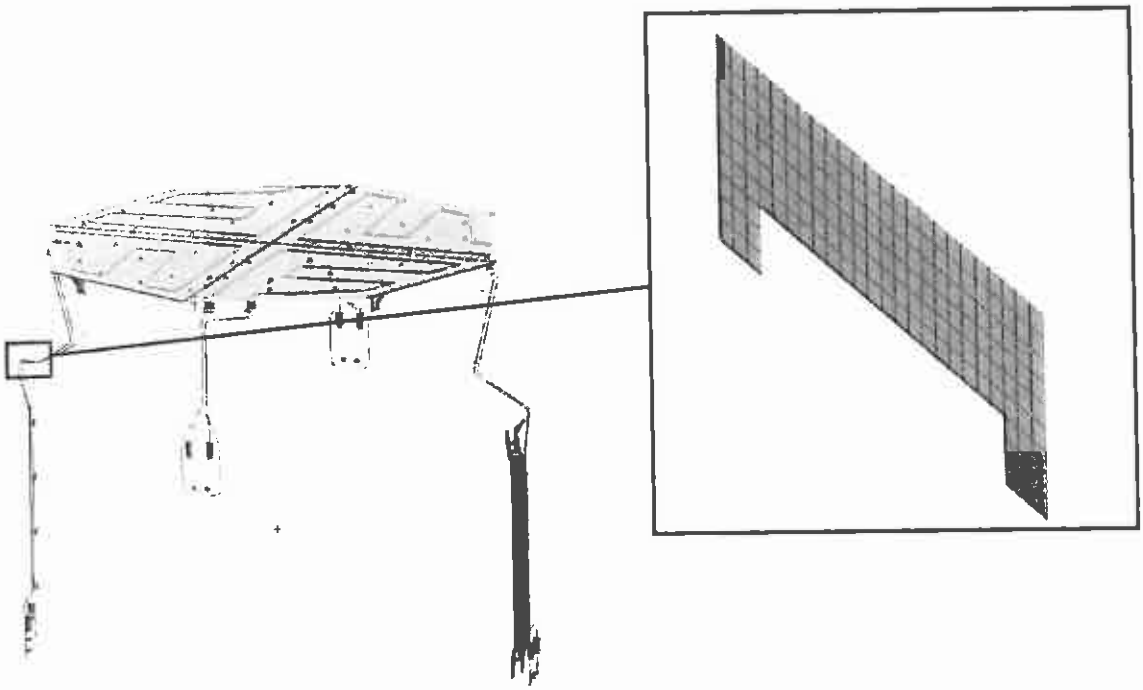

Mass [kg]	0.006
Material	Peek
Thickness [m]	0.01
Used fem elements	Shell

Figure 5-19: LHP VSB3 upper bracket

Questo documento contiene informazioni di proprietà di CARLO GAVAZZI SPACE SpA. Tutti i diritti sono riservati.
All information contained in this document are property of CARLO GAVAZZI SPACE SpA. All right reserved.

5.6 MODEL BOUNDARY CONDITIONS

In the following figures the constraint condition for the CRYO TCS Zenith Radiators and VSB are presented:

The Zenith Radiator is constrained by the Spokes and brackets (Stiff and Z) with SPC card (6 DoF).
The LHP Transport Line is constrained through the TRD brackets, the VSB supports, the LHP VSB3 brackets and the Compensation Chamber by SPC card (6 DoF).

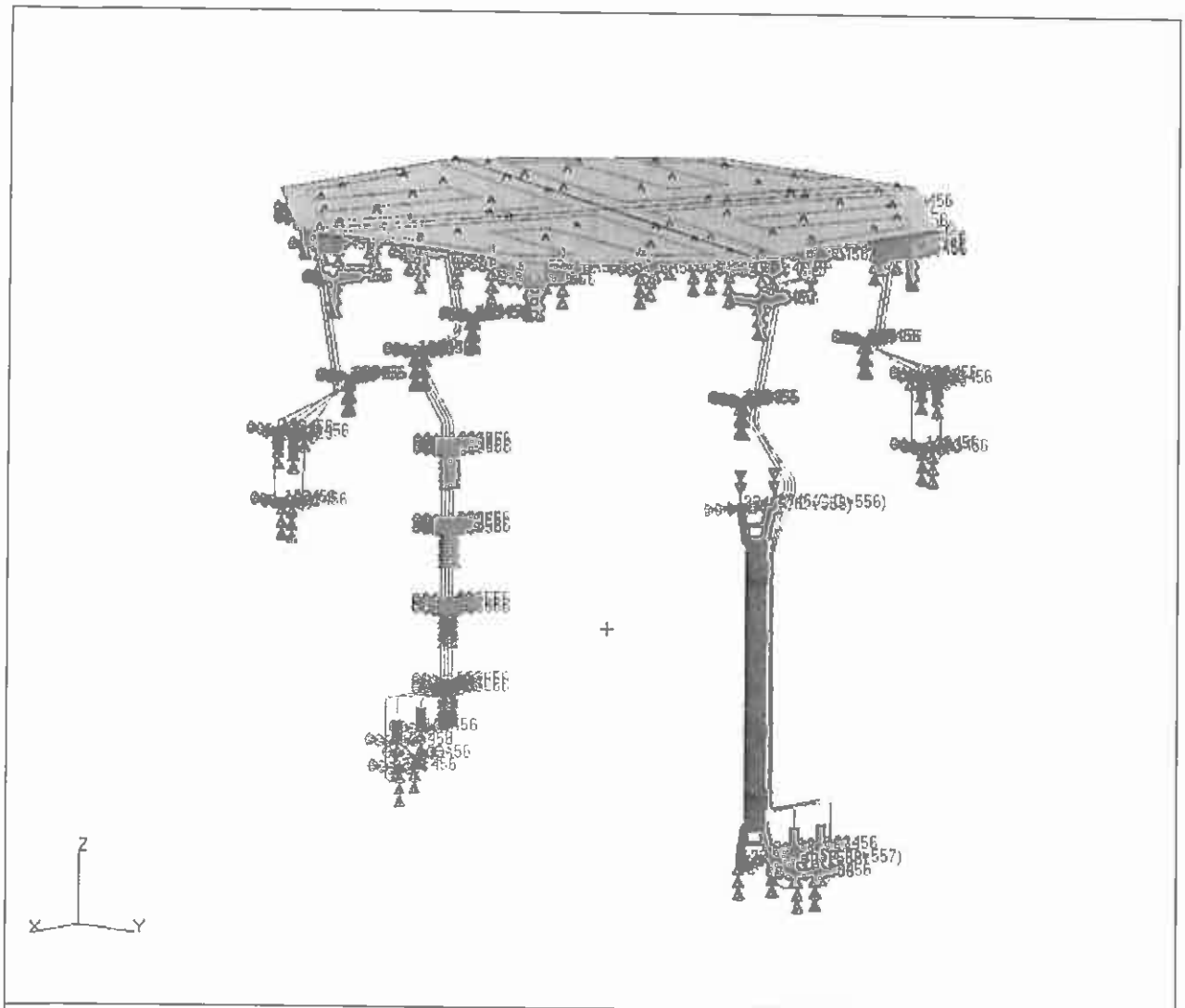

Figure 5-20: Model boundary conditions for CRYO TCS

Questo documento contiene informazioni di proprietà di CARLO GAVAZZI SPACE SpA. Tutti i diritti sono riservati.
All information contained in this document are property of CARLO GAVAZZI SPACE SpA. All right reserved.

5.7 MODEL MASS BUDGET

The mass of the model is without any contingency.

	ITEM	Part Mass [kg]	Q.ty	Total Mass [kg]	Fem Mass [kg]	Remarks
			CRYO - TCS			
RADIATORS	Outer Skin	5.38	4	21.50	24.14	
	Lower Skin	1.01	4	4.05	5.71	
	Rohacell Core	0.60	4	2.41	2.47	
	Condenser Line	0.15	4	0.60	0.64	
	Spokes Insert	0.02	52	0.90	0.69	
	Other Insert	1.17	1	1.17	-	Added to spoke insert
	Spokes	0.01	52	0.71	1.68	
	Adhesive	1.09	4	4.35	-	Added to radiator skin
	Stiff. Bracket	0.27	4	1.06	1.03	
	Z-Bracket	0.05	4	0.20	0.30	
	Bimetallic Joints Bracket	0.15	8	1.19	0.72	Bi-metallic joints masses added
	Gps Antenna Support	0.29	1	0.29	0.29	
	Sub-total			**38.42**	**37.67**	
TRANSPORT LINE	LHP Long-Cryo structure	0.37	2	0.74	1.01	Compensation chamber and wick masses added
	LHP Short-Cryo structure	0.16	2	0.31	0.54	Compensation chamber and wick masses added
	LHP-TRD M structure Brackets	0.04	8	0.30	0.23	
	VSB3 Lateral Bracket	0.03	4	0.12	0.12	
	VSB3 Upper Bracket	0.01	1	0.01	0.01	
	Sub-total			**1.48**	**1.91**	
			VSB 1			
VSB1 WAKE PORT	Channel	0.55	1	0.55	2.02	TCS internal masses added
	Upper Support	0.40	1	0.40	0.37	
	Lower Support	0.36	1	0.36	0.35	
	Channel Upper Cover	0.27	1	0.27	0.28	
	Channel Lower Cover	0.05	1	0.05	0.05	
	Lateral Bracket and Stand-off	0.04	4	0.16	0.18	
	Support and Clamp	0.18	1	0.18	-	Added as NSM
	Harness	0.35	1	0.35	0.01	0.34 added as NSM
	Sub-total			**2.33**	**3.27**	
	TOTAL			**42.23**	**42.86**	**Diff. 1.48 %**

Table 5-23: CRYO-TCS and VSB FEM mass budget

Questo documento contiene informazioni di proprietà di CARLO GAVAZZI SPACE SpA. Tutti i diritti sono riservati.
All information contained in this document are property of CARLO GAVAZZI SPACE SpA. All right reserved.

5.8 MODEL CHECK

The mathematical checks of the FE model are presented.

5.8.1 MODEL SIZE AND GEOMETRY

In the following tables the summary of the check runs that verify the mathematical correctness of the assembly model is shown:

MATHEMATICAL MODEL VERIFICATION RESULTS
GEOMETRY CHECK

MODEL FILE NAMES :
AMS_ZR_FINAL_080306.bdf

RUN FILE NAMES
AMS_ZR_FINAL_080306_STRAIN.dat, param_zr.**blk**

MODEL UNITS
Length=m, mass=Kg, density=Kg/m^3, Young mod.=N/m^2, Stress=N/m^2, Deformation=m, Strain En=N*m=Joule.

```
M O D E L   S U M M A R Y

NUMBER OF GRID      POINTS   =    67974

NUMBER OF CBAR      ELEMENTS =     6700
NUMBER OF CHEXA     ELEMENTS =    28944
NUMBER OF CONM2     ELEMENTS =       93
NUMBER OF CPENTA    ELEMENTS =      352
NUMBER OF CQUAD4    ELEMENTS =    44805
NUMBER OF CTRIA3    ELEMENTS =      568

NUMBER OF RBE2      ELEMENTS =      291
```

Table 5-24: FEM Geometry Check

Questo documento contiene informazioni di proprietà di CARLO GAVAZZI SPACE SpA. Tutti i diritti sono riservati.
All information contained in this document are property of CARLO GAVAZZI SPACE SpA. All right reserved.

5.8.2 FREE-FREE AND HARDMOUNTED MODES

In the rigid body check the first 24 free body frequencies (6 free modes times each radiator panel, near to zero) are investigated. The six DoF of the rigid elements RBE2 are constrained to lock the free modes of the bracket connected to the LHP.

MATHEMATICAL **MODEL** VERIFICATION RESULTS
MASS PROPERTIES, FREE-FREE MODES, HARDMOUNTED MODES

MODEL FILE NAMES: AMS_ZR_FINAL_080306.bdf

RUN FILE NAMES: AMS_ZR_FINAL_080306_MODAL_FREE_FREE.dat, AMS_ZR_080306_MODAL.dat, param_zr.blk, EFFMASSA.V707

MODEL UNITS

Length=m, mass=Kg, density=Kg/m^3, Young mod.=N/m^2, Stress=N/m^2, **Deformation=m, Strain** En=N*m=Joule.

PARAMETERS:	
PARAM,POST,0	PARAM,GRDPNT,0
PARAM,PRTMAXIM,YES	PARAM,WTMASS,1.
PARAM,AUTOSPC,YES	PARAM,K6ROT,1.
PARAM,COUPMASS,0	PARAM,PRGPST,NO
	PARAM,NOCOMPS,0

MASS PROPERTIES

```
                    O U T P U T   F R O M   G R I D   P O I N T   W E I G H T   G E N E R A T O R
                                                    REFERENCE POINT =       0
                                                                          M O
*  4.285815E+01 -4.065758E-20  0.000000E+00  6.776264E-21  6.070698E+01 -4.401768E+00 *
* -4.065758E-20  4.285815E+01  0.000000E+00 -6.070698E+01  6.776264E-21  1.709236E+00 *
*  0.000000E+00  0.000000E+00  4.285815E+01  4.401768E+00 -1.709236E+00  0.000000E+00 *
*  6.776264E-21 -6.070698E+01  4.401768E+00  1.190089E+02 -2.782337E+00  1.795405E-01 *
*  6.070698E+01  6.776264E-21 -1.709236E+00 -2.782337E+00  1.135494E+02 -6.721925E-01 *
* -4.401768E+00  1.709236E+00  0.000000E+00  1.795405E-01 -6.721925E-01  4.048012E+01 *
                                                                          S
                                          *  1.000000E+00  0.000000E+00  0.000000E+00 *
                                          *  0.000000E+00  1.000000E+00  0.000000E+00 *
                                          *  0.000000E+00  0.000000E+00  1.000000E+00 *
                                                          DIRECTION
                    MASS AXIS SYSTEM (S)     MASS              X-C.G.        Y-C.G.        Z-C.G.
                              X           4.285815E+01      1.581091E-22  1.027055E-01  1.416463E+00
                              Y           4.285815E+01      3.988124E-02  1.581091E-22  1.416463E+00
                              Z           4.285815E+01      3.988124E-02  1.027055E-01  0.000000E+00
                                                                          I(S)
                                          *  3.256758E+01  2.606789E+00 -2.600610E+00 *
                                          *  2.606789E+00  2.749201E+01 -5.562749E+00 *
                                          * -2.600610E+00 -5.562749E+00  3.995987E+01 *
                                                                          I(Q)
                                          *  4.232874E+01                             *
                                          *                2.402755E+01               *
                                          *                                3.366317E+01 *
                                                                            Q
                                          * -1.627800E-01  3.708515E-01  9.143149E-01 *
                                          * -3.211827E-01  8.562853E-01 -4.044961E-01 *
                                          * -9.329225E-01 -3.595060E-01 -2.027509E-02 *
```

RIGID BODY NORMAL MODE CHECK

REAL EIGENVALUES

MODE NO.	EXTRACTION ORDER	EIGENVALUE	RADIANS	CYCLES	GENERALIZED MASS	GENERALIZED STIFFNESS
1	1	-8.809070E-06	2.968008E-03	4.723731E-04	1.000000E+00	-8.809070E-06
2	2	-2.512512E-06	1.585090E-03	2.522750E-04	1.000000E+00	-2.512512E-06
3	3	-2.423863E-06	1.556876E-03	2.477845E-04	1.000000E+00	-2.423863E-06
[ ]						
24	24	1.990807E-05	4.461845E-03	7.101247E-04	1.000000E+00	1.990807E-05
25	25	7.785726E+00	2.790291E+00	4.440887E-01	1.000000E+00	7.785726E+00
26	26	1.409759E+01	3.754675E+00	5.975751E-01	1.000000E+00	1.409759E+01
27	27	1.787599E+01	4.228001E+00	6.729073E-01	1.000000E+00	1.787599E+01
28	28	2.487831E+01	4.987816E+00	7.938356E-01	1.000000E+00	2.487831E+01
29	29	8.789407E+01	9.375184E+00	1.492107E+00	1.000000E+00	8.789407E+01
30	30	1.418030E+02	1.190811E+01	1.895234E+00	1.000000E+00	1.418030E+02

HARDMOUNTED NORMAL MODE CHECK

REAL EIGENVALUES

MODE NO.	EXTRACTION ORDER	EIGENVALUE	RADIANS	CYCLES	GENERALIZED MASS	GENERALIZED STIFFNESS
1	1	5.033931E+04	2.243642E+02	3.570868E+01	1.000000E+00	5.033931E+04
2	2	6.571914E+04	2.563575E+02	4.080055E+01	1.000000E+00	6.571914E+04
3	3	7.829609E+04	2.798144E+02	4.453384E+01	1.000000E+00	7.829609E+04
4	4	9.352533E+04	3.058191E+02	4.867262E+01	1.000000E+00	9.352533E+04
5	5	9.572865E+04	3.094005E+02	4.924261E+01	1.000000E+00	9.572865E+04
6	6	1.005861E+05	3.171530E+02	5.047647E+01	1.000000E+00	1.005861E+05
7	7	1.085185E+05	3.294214E+02	5.242904E+01	1.000000E+00	1.085185E+05
8	8	1.105578E+05	3.325024E+02	5.291940E+01	1.000000E+00	1.105578E+05
9	9	1.219099E+05	3.491559E+02	5.556990E+01	1.000000E+00	1.219099E+05
10	10	1.248910E+05	3.533992E+02	5.624522E+01	1.000000E+00	1.248910E+05

Table 5-25: FEM mass properties, free-free modes, hardmounted modes

Questo documento contiene informazioni di proprietà di CARLO GAVAZZI SPACE SpA. Tutti i diritti sono riservati.
All information contained in this document are property of CARLO GAVAZZI SPACE SpA. All right reserved.

5.8.3 1 G CHECK

MATHEMATICAL **MODEL** VERIFICATION **RESULTS**
1g CHECK

MODEL FILE NAMES : AMS_ZR_FINAL_080306.bdf

RUN FILE NAMES AMS_ZR_FINAL_080306_1G.dat, ZENITH_RADIATOR_grav_**1gchk.blk, ZENITH_RADIATOR_subcases_1gchk.blk, param_zr.blk**

PARAMETERS:	
PARAM,POST,0	PARAM,GRDPNT,0
PARAM,PRTMAXIM,YES	PARAM,WTMASS,1.
PARAM,AUTOSPC,YES	PARAM,K6ROT,1.
PARAM,COUPMASS,0	PARAM,PRGPST,NO
	PARAM,NOCOMPS,0

UNITY GRAVITY LOADING CHECK (COORD 0)

M= 42.858 Kg
g=9.81
Fxyz=420.438 N

OLOAD RESULTANT

SUBCASE/ DAREA ID	LOAD TYPE	T1	T2	T3	R1	R2	R3
10001	FX	4.204384E+02	----	----	----	5.955355E+02	-4.318135E+01
	FY	----	1.897354E-19	----	-1.602316E-19	----	-8.722745E-20
	FZ	----	----	0.000000E+00	0.000000E+00	0.000000E+00	----
	MX	----	----	----	0.000000E+00	----	----
	MY	----	----	----	----	0.000000E+00	----
	MZ	----	----	----	----	----	0.000000E+00
	TOTALS	4.204384E+02	1.897354E-19	0.000000E+00	-1.602316E-19	5.955355E+02	-4.318135E+01
10002	FX	-1.897354E-19	----	----	----	-1.602316E-19	-2.549287E-19
	FY	----	4.204384E+02	----	-5.955355E+02	----	1.676761E+01
	FZ	----	----	0.000000E+00	0.000000E+00	0.000000E+00	----
	MX	----	----	----	0.000000E+00	----	----
	MY	----	----	----	----	0.000000E+00	----
	MZ	----	----	----	----	----	0.000000E+00
	TOTALS	-1.897354E-19	4.204384E+02	0.000000E+00	-5.955355E+02	-1.602316E-19	1.676761E+01
10003	FX	0.000000E+00	----	----	----	0.000000E+00	0.000000E+00
	FY	----	0.000000E+00	----	0.000000E+00	----	0.000000E+00
	FZ	----	----	4.204384E+02	4.318135E+01	-1.676761E+01	----
	MX	----	----	----	0.000000E+00	----	----
	MY	----	----	----	----	0.000000E+00	----
	MZ	----	----	----	----	----	0.000000E+00
	TOTALS	0.000000E+00	0.000000E+00	4.204384E+02	4.318135E+01	-1.676761E+01	0.000000E+00

SPCFORCE RESULTANT

SUBCASE/ DAREA ID	LOAD TYPE	T1	T2	T3	R1	R2	R3
10001	FX	-4.204384E+02	----	----	----	-5.745985E+02	4.231357E+01
	FY	----	-1.638883E-10	----	3.262308E+00	----	8.873180E-01
	FZ	----	----	-1.048563E-10	-2.823337E+00	-1.513769E+01	----
	MX	----	----	----	-4.389710E-01	----	----
	MY	----	----	----	----	-5.799301E+00	----
	MZ	----	----	----	----	----	-1.954249E-02
	TOTALS	-4.204384E+02	-1.638883E-10	-1.048563E-10	0.000000E+00	-5.955355E+02	4.318135E+01
10002	FX	1.585585E-10	----	----	----	-4.103131E-01	-1.837864E-01
	FY	----	-4.204384E+02	----	5.777409E+02	----	-1.618969E+01
	FZ	----	----	1.625791E-10	1.139256E+01	-1.125549E-01	----
	MX	----	----	----	6.401982E+00	----	----
	MY	----	----	----	----	5.228679E-01	----
	MZ	----	----	----	----	----	-3.941344E-01
	TOTALS	1.585585E-10	-4.204384E+02	1.625791E-10	5.955355E+02	-3.725290E-08	-1.676761E+01
10003	FX	-7.808004E-11	----	----	----	-4.739797E-01	2.603524E-01
	FY	----	-5.876519E-11	----	-1.231463E+00	----	-3.159905E-01
	FZ	----	----	-4.204384E+02	-4.179078E+01	1.715287E+01	----
	MX	----	----	----	-1.591038E-01	----	----
	MY	----	----	----	----	8.871832E-02	----
	MZ	----	----	----	----	----	5.563803E-02
	TOTALS	-7.808004E-11	-5.876519E-11	-4.204384E+02	-4.318135E+01	1.676761E+01	-1.862645E-08

EPSILON

LOAD SEQ. NO.	EPSILON	EXTERNAL WORK
1	-3.1894470E-11	2.8118764E-03
2	-6.9713961E-12	2.4002818E-03
3	2.3807765E-13	1.5587105E-03

Table 5-26: FEM 1g check

Questo documento contiene informazioni di proprietà di CARLO GAVAZZI SPACE SpA. Tutti i diritti sono riservati.
All information contained in this document are property of CARLO GAVAZZI SPACE SpA. All right reserved.

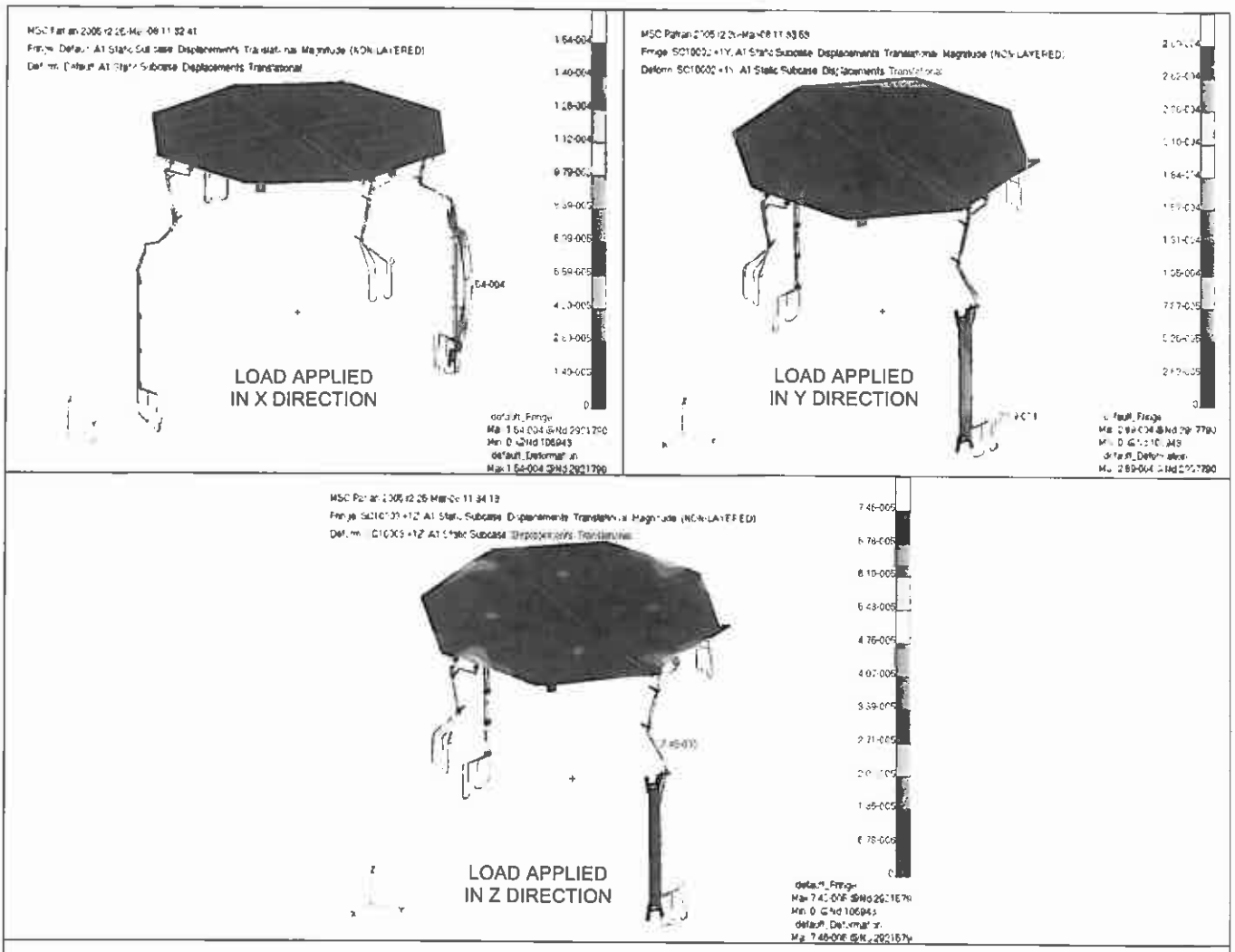

Figure 5-21: 1G check analysis run results

Questo documento contiene informazioni di proprietà di CARLO GAVAZZI SPACE SpA. Tutti i diritti sono riservati.
All information contained in this document are property of CARLO GAVAZZI SPACE SpA. All right reserved.

5.8.3.1 STRAIN ENERGY CHECK

MATHEMATICAL MODEL VERIFICATION RESULTS
STRAIN ENERGY CHECK

MODEL FILE NAMES : AMS_ZR_FINAL_080306.bdf

RUN FILE NAMES: AMS_ZR_FINAL_080306_STRAIN.dat, param_zr.blk

COMAND: GROUNDCHECK(SET=ALL,THRESH=1.E-3,DATAREC=YES) = YES

PARAMETERS:	
PARAM,POST,0	PARAM,GRDPNT,0
PARAM,PRTMAXIM,YES	PARAM,WTMASS,1.
PARAM,AUTOSPC,YES	PARAM,K6ROT,1.
PARAM,COUPMASS,0	PARAM,PRGPST,NO
	PARAM,NOCOMPS,0

STRAIN ENERGY CHECK [J]

```
   RESULTS OF RIGID BODY CHECKS OF MATRIX KGG       (G-SET)  FOLLOW:
PRINT RESULTS IN ALL SIX DIRECTIONS AGAINST THE LIMIT OF   1.000000E-03
                DIRECTION        STRAIN ENERGY        PASS/FAIL
                ---------        -------------        ---------
                    1              2.033056E-05          PASS
                    2              3.200691E-05          PASS
                    3              7.483645E-05          PASS
                    4              8.367663E-05          PASS
                    5              7.452384E-05          PASS
                    6              6.590715E-06          PASS

   RESULTS OF RIGID BODY CHECKS OF MATRIX KNN       (N-SET)  FOLLOW:
PRINT RESULTS IN ALL SIX DIRECTIONS AGAINST THE LIMIT OF   1.000000E-03
                DIRECTION        STRAIN ENERGY        PASS/FAIL
                ---------        -------------        ---------
                    1              2.163456E-05          PASS
                    2              3.105822E-05          PASS
                    3              6.817191E-05          PASS
                    4              7.641156E-05          PASS
                    5              5.917405E-05          PASS
                    6              1.397239E-05          PASS

RESULTS OF RIGID BODY CHECKS OF MATRIX KNN+AUTO (N+AUTOSPC-SET)  FOLLOW:
PRINT RESULTS IN ALL SIX DIRECTIONS AGAINST THE LIMIT OF   1.000000E-03
                DIRECTION        STRAIN ENERGY        PASS/FAIL
                ---------        -------------        ---------
                    1              2.163456E-05          PASS
                    2              3.105822E-05          PASS
                    3              6.817191E-05          PASS
                    4              7.641156E-05          PASS
                    5              5.917405E-05          PASS
                    6              1.397239E-05          PASS

   RESULTS OF RIGID BODY CHECKS OF MATRIX KFF       (F-SET)  FOLLOW:
PRINT RESULTS IN ALL SIX DIRECTIONS AGAINST THE LIMIT OF   1.000000E-03
                DIRECTION        STRAIN ENERGY        PASS/FAIL
                ---------        -------------        ---------
                    1              2.163456E-05          PASS
                    2              3.105822E-05          PASS
                    3              6.817191E-05          PASS
                    4              7.641156E-05          PASS
                    5              5.917405E-05          PASS
                    6              1.397239E-05          PASS
```

Table 5-27: FEM Strain Energy check

Questo documento contiene informazioni di proprietà di CARLO GAVAZZI SPACE SpA. Tutti i diritti sono riservati.
All information contained in this document are property of CARLO GAVAZZI SPACE SpA. All right reserved.

5.8.3.2 THERMOELASTIC CHECK

Thermo elastic check has been performed considering:

- Isostatic boundary conditions
- Uniform temperature distribution (delta temperature 100°)
- Same CTE for all materials (1e-5)
- Same Young's Modulus for all materials (1.e11 Pa)

Such check is made to check if fictitious stresses are introduced by the thermo elastic behaviour of the FE model.

MATHEMATICAL MODEL VERIFICATION RESULTS
THERMAL ANALYSIS CHECK

MODEL FILE NAMES
AMS_ZR_FINAL_080306_thermalcheck.bdf

RUN FILE NAMES
AMS_ZR_FINAL_080306_THERMAL_CHECK.dat; ZR_load_temperature_CHECK.blk; param_zr.blk

PARAMETERS:
PARAM,POST,0
PARAM,PRTMAXIM,YES
PARAM,AUTOSPC,YES
PARAM,PRGPST,NO
PARAM,COUPMASS,0
PARAM,GRDPNT,0
PARAM,K6ROT,1.
PARAM,WTMASS,1.

THERMO ELASTIC CHECK (COORD 0)

SUBCASE/ DAREA ID	LOAD TYPE	T1	T2	T3	R1	R2	R3
				OLOAD	RESULTANT		
1	FX	-1.261765E-09	----	----	----	-8.347578E+02	-2.008941E+04
	FY	----	4.185263E-12	----	-3.915837E+01	----	2.008941E+04
	FZ	----	----	2.238222E-06	3.915756E+01	8.347587E+02	----
	MX	----	----	----	8.100899E-04	----	----
	MY	----	----	----	----	-9.041778E-04	----
	MZ	----	----	----	----	----	-7.167160E-05
	TOTALS	-1.261765E-09	4.185263E-12	2.238222E-06	1.374108E-06	1.134950E-05	-7.167160E-05

MAXIMUM STRESS

Maximum Von Mises stress = 0.29 MPa

Maximum Combined stress = 0.22 MPa

Table 5-28:–Thermal analysis check

Following figure shows maximum stresses in thermo elastic check condition.

Questo documento contiene informazioni di proprietà di CARLO GAVAZZI SPACE SpA. Tutti i diritti sono riservati.
All information contained in this document are property of CARLO GAVAZZI SPACE SpA. All right reserved.

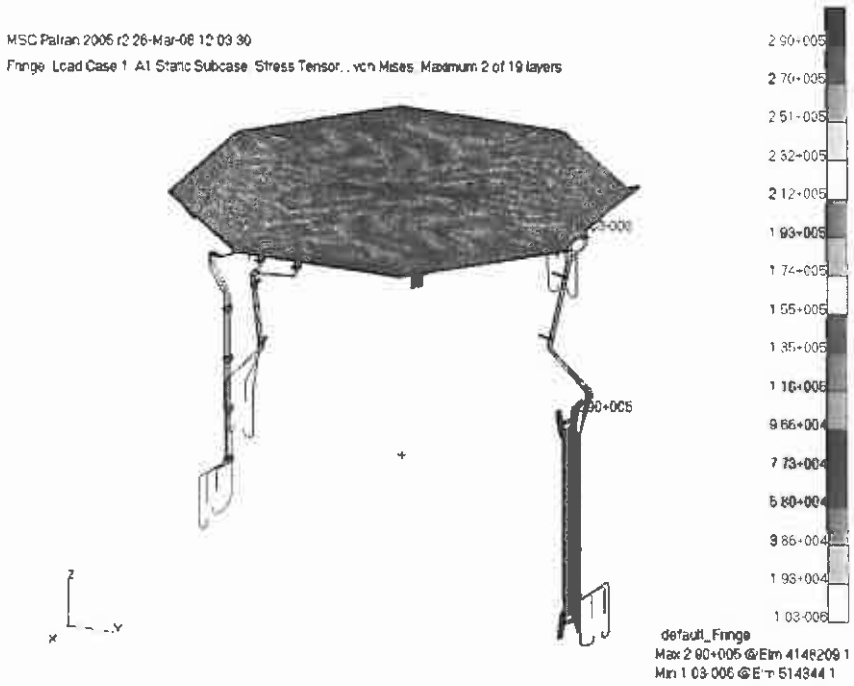

Figure 5-22: Thermal check analysis run results, Von Mises stress

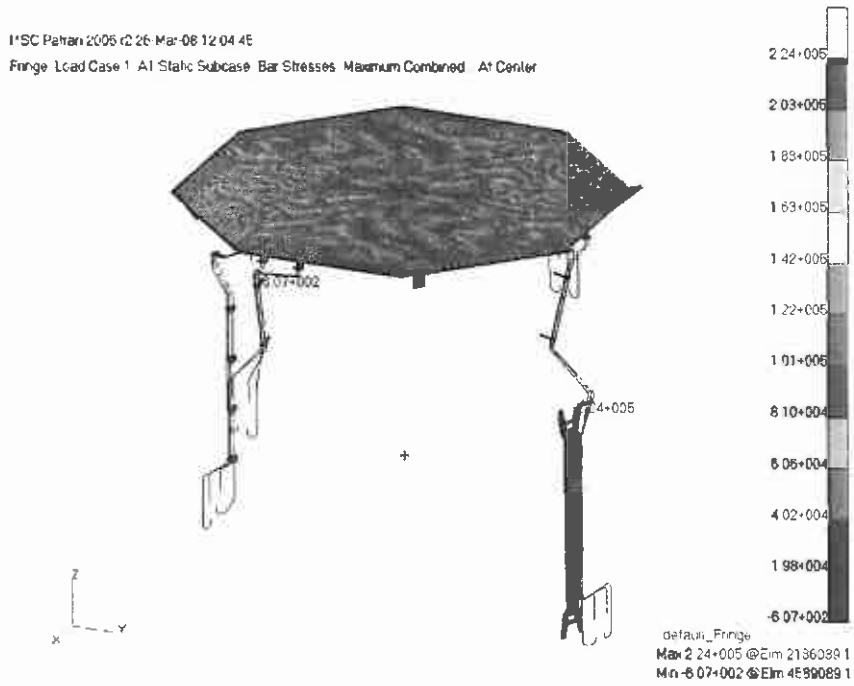

Figure 5-23: Thermal check analysis run results, Maximum Combined stress

Questo documento contiene informazioni di proprietà di CARLO GAVAZZI SPACE SpA. Tutti i diritti sono riservati.
All information contained in this document are property of CARLO GAVAZZI SPACE SpA. All right reserved.

6. CRYO TCS ZENITH RADIATORS AND VSB DIMENSIONING LOADS

The loads that the CRYO TCS Zenith radiators and VSB shall sustain are specified in AD 1

- 6.1 INERTIAL LOADS AND ACOUSTIC LOADS
- 6.2 EVA LOADS
- 6.3 THERMOELASTIC LOADS

6.1 INERTIAL LOADS AND ACOUSTIC LOADS

The mechanical load environment of the AMS secondary structures with a mass less than 227 kg (for launch, on-orbit etc) is stated in AD1.
These load factors are to be applied in any axis with a load factor of 25% of the primary load in the orthogonal directions.
The limit loads with respect to the structure mass are listed in table

Weight [kg]	Limit Load Factor LLF [g]
< 9	40
9-23	31
23-45	22
45-91	17
91-227	13

Table 6-1: Design Limit Load Factors for small secondary structures

The AD1 specifies to superimpose to the inertial loads an additional acceleration of 12 g on the Zenith Radiator surface that is a potential acoustic receiver (low mass to area ratio).
The following table summarizes this combined load cases:

Questo documento contiene informazioni di proprietà di CARLO GAVAZZI SPACE SpA. Tutti i diritti sono riservati.
All information contained in this document are property of CARLO GAVAZZI SPACE SpA. All right reserved.

Load Case	X DIRECTION [g]	Y DIRECTION [g]	Z DIRECTION [g]
1	+31	+7.75	+19.75
2	+31	+7.75	-19.75
3	+31	-7.75	+19.75
4	+31	-7.75	-19.75
5	-31	+7.75	+19.75
6	-31	+7.75	-19.75
7	-31	-7.75	+19.75
8	-31	-7.75	-19.75
9	+7.75	+31	+19.75
10	+7.75	+31	-19.75
11	+7.75	-31	+19.75
12	+7.75	-31	-19.75
13	-7.75	+31	+19.75
14	-7.75	+31	-19.75
15	-7.75	-31	+19.75
16	-7.75	-31	-19.75
17	+7.75	+7.75	+43
18	+7.75	+7.75	-43
19	+7.75	-7.75	+43
20	+7.75	-7.75	-43
21	-7.75	+7.75	+43
22	-7.75	+7.75	-43
23	-7.75	-7.75	+43
24	-7.75	-7.75	-43

Table 6-2: Inertial and Acoustic loads for CRYO TCS Zenith Radiator and VSB

Questo documento contiene informazioni di proprietà di CARLO GAVAZZI SPACE SpA. Tutti i diritti sono riservati.
All information contained in this document are property of CARLO GAVAZZI SPACE SpA. All right reserved.

6.2 EVA LOADS

The extravehicular activity (EVA) loads have been considered according to RD 3, RD 14 and RD 15.
In particular an inadvertent kick/bump force of 556 N has been applied over a 1/2 inch diameter circular area perpendicular to the radiator panel area.

The following table and figure shows the load case entity and positions.

Load Case	Force [N]
25	556
26	556
27	556
28	556

Table 6-3: EVA Loads for Zenith Radiator

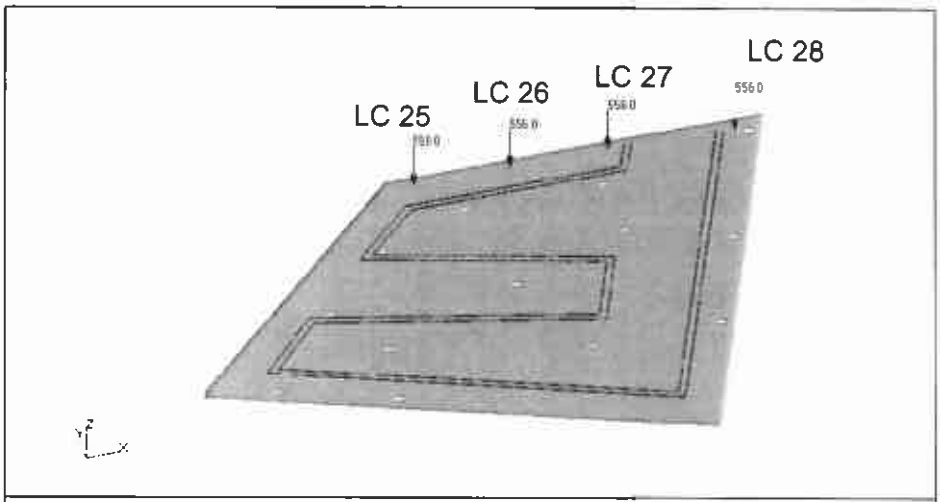

Figure 6-1: EVA Load Cases on Zenith Radiator

Questo documento contiene informazioni di proprietà di CARLO GAVAZZI SPACE SpA. Tutti i diritti sono riservati.
All information contained in this document are property of CARLO GAVAZZI SPACE SpA. All right reserved.

6.3 THERMOELASTIC LOADS

According to RD11 the worst condition for the CRYO TCS Zenith radiator from the structural point of view is the AMS power off. This condition provides the highest temperature gradient between Zenith Radiator and TRD.
During this condition the Zenith radiator panel is cooled down to -124°C, while the elements below the radiator panel (i.e.: stiff bracket, Z-Bracket, spokes) have a linear gradient from -17°C (TRD temperature during power off) to -124°C at radiator I/F.
The following table and figure show the temperatures for each CRYO TCS Zenith Radiator and VSB FE model obtained from the thermal analysis.

LC	ITEM	TEMPERATURE [K]
29	Zenith radiator panel	149
	LHP Condenser Line	149
	Bimetallic support bkt	149
	Z-BKT	Temperature linear gradient from 256 K to 149 K
	Stiff BKT	Temperature linear gradient from 256 K to 149 K
	GPS antenna support	Temperature linear gradient from 256 K to 149 K
	LHP transport lines	Temperature gradient as shown in the Figure 6-2
	LHP/TRD BKT	200
	LHP VSB STAND OFF AND BKT	242
	VSB (VC I/F, BODY AND COVER)	242

Table 6-4: Thermo elastic load case

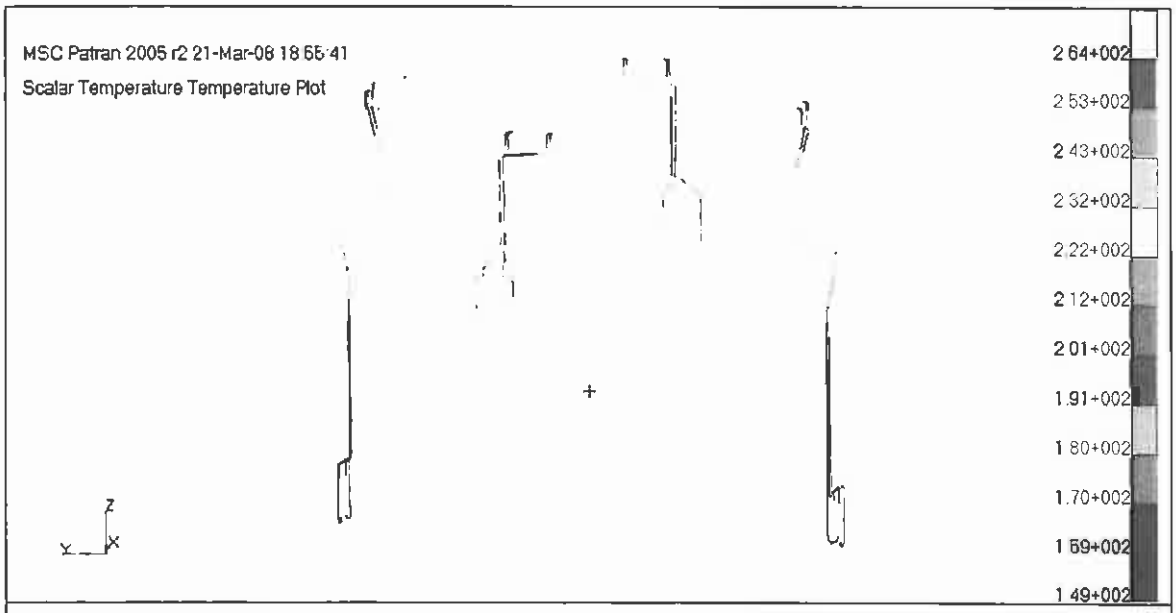

Figure 6-2: Temperature distribution on LHP transport lines during the AMS power off

Questo documento contiene informazioni di proprietà di CARLO GAVAZZI SPACE SpA. Tutti i diritti sono riservati.
All information contained in this document are property of CARLO GAVAZZI SPACE SpA. All right reserved.

7. TCS RADIATORS DIMENSIONING RULES

7.1 SAFETY FACTORS

CRYO TCS system and VSB has to show positive MoS applying the following SF (see AD 1):

SAFETY FACTORS	Yield	Ultimate
Metallic structures	1.25	2.0
Non metallic structures	NA	2.0
Fasteners (Nominal)	1.25	2.0
Joint separation	1.2	NA
Joints fitting factor	1.15	1.15
Buckling	NA	2.0
Fasteners (Fail safe)	NA	1.0
Tested structure	NA	1.5

Table 7-1: Safety Factors for structure

Questo documento contiene informazioni di proprietà di CARLO GAVAZZI SPACE SpA. Tutti i diritti sono riservati.
All information contained in this document are property of CARLO GAVAZZI SPACE SpA. All right reserved.

7.2 MARGINS OF SAFETY FOR STRUCTURE

The MoS is defined as:

$$MoS_Y = \frac{\sigma_y}{SF_Y \cdot \sigma_{Load}} - 1.0$$ for the yield strength, and

$$MoS_U = \frac{\sigma_u}{SF_U \cdot \sigma_{Load}} - 1.0$$ for the ultimate strength, where:

- σ_Y the yield strength of the material,
- σ_U the ultimate strength of the material,
- SF_Y the safety factor for yield strength,
- SF_U the safety factor for ultimate strength,
- σ_{Load} the maximum Von Mises equivalent stress due to external loads.

The MoS for stresses indicates the amount by which the allowable stress, defined by the material characteristics, exceeds the actual stress due to the applied loads, taking into account the applicable SF, defined in Chapter 7.1 .
It is required that MoS are positive for all load cases, for all structural elements.

Additional MoS can be defined to evaluate margins for generic results.

$$MoS = \frac{A}{SF \cdot B} - 1.0$$

- A allowable
- B actual value
- SF applicable safety factor

It is required that Margins of Safety are positive for all load cases and operative conditions, for all elements.

For bolts verification dedicated MoS definition is provided in the exemplificative calculation of ANNEX 1.
For rivet verification the MoS definition is provided in the chapter 8.2.3

7.3 FAILURE INDEX FOR COMPOSITE STRUCTURE

The composite structure verification has been performed using the failure index approach.
The used failure index formulation is the TSAI WU:

TSAI WU Failure Index: $$fi = F_{11}\sigma_1^2 + F_{22}\sigma_2^2 - F_{12}(\sigma_1\sigma_2) + F_{66}\tau_{12}^2 + F_1\sigma_1 + F_2\sigma_2$$

Questo documento contiene informazioni di proprietà di CARLO GAVAZZI SPACE SpA. Tutti i diritti sono riservati.
All information contained in this document are property of CARLO GAVAZZI SPACE SpA. All right reserved.

Where:

$$\begin{cases} F_1 = \left(\dfrac{1}{f_T}\right) - \left(\dfrac{1}{f_C}\right) \\ F_2 = \left(\dfrac{1}{f_T}\right) - \left(\dfrac{1}{f_C}\right) \\ F_{11} = \dfrac{1}{(f_T \cdot f_C)} \\ F_{22} = \dfrac{1}{(f_T \cdot f_C)} \\ F_{66} = \dfrac{1}{f_s^{\,2}} \\ F_{12} = -0.5\sqrt{F_{11} \cdot F_{22}} \end{cases}$$

Since the failure indexes have a non-linear behavior the Safety Factor has to be included in the Load Cases; in particular a SF=2 has to be applied to the load cases described in the chapter 6 to evaluate the failure index entity.

It is required that the composite structure Failure Indexes are $fi < 1$ for all load cases and operative conditions, for all elements.

Questo documento contiene informazioni di proprietà di CARLO GAVAZZI SPACE SpA. Tutti i diritti sono riservati.
All information contained in this document are property of CARLO GAVAZZI SPACE SpA. All right reserved.

8. CRYO-TCS STRUCTURAL ANALYSIS FOR NOMINAL CONFIGURATION

For nominal configuration, the following analyses have been performed:

- 8.1 DYNAMIC ANALYSIS FOR NOMINAL CONFIGURATION
- 8.2 STATIC ANALYSIS FOR NOMINAL CONFIGURATION

8.1 DYNAMIC ANALYSIS FOR NOMINAL CONFIGURATION

In this section, results in terms of frequencies, mode shapes and effective masses are included.
A modal analysis up to 2000 Hz has been performed.

Following table shows the frequency with mass greater than 5%.

MODE	FREQ [Hz]	EFF. MASS [Kg] NX	EFF. MASS [Kg] NY	EFF. MASS [Kg] NZ	% OF TOTAL MASS NX	% OF TOTAL MASS NY	% OF TOTAL MASS NZ
6	50.40	1.933	0.104	0.008	**5%**	1%	1%
21	68.57	0.096	2.065	0.035	1%	**5%**	1%
115	136.54	2.367	1.091	0.002	**6%**	3%	1%
116	136.54	2.367	1.091	0.002	**6%**	3%	1%
117	136.60	1.011	2.163	0.003	2%	**5%**	1%
118	136.62	0.953	2.024	0.004	2%	**5%**	1%
122	138.58	3.195	1.362	0.041	**7%**	3%	1%
123	138.58	3.195	1.362	0.041	**7%**	3%	1%
124	138.63	1.505	3.608	0.043	4%	**8%**	1%
125	138.66	1.525	3.577	0.046	4%	**8%**	1%
142	155.35	0.057	0.035	3.498	1%	1%	**8%**
145	155.98	0.078	0.019	4.103	1%	1%	**10%**
146	155.98	0.078	0.019	4.103	1%	1%	**10%**
147	156.32	0.017	0.091	3.638	1%	1%	**8%**
192	195.57	0.843	3.492	0.053	2%	**8%**	1%
193	195.57	0.843	3.492	0.053	2%	**8%**	1%
194	195.68	3.350	0.859	0.062	**8%**	2%	1%
195	195.94	2.876	0.678	0.065	**7%**	2%	1%

Table 8-1: CRYO-TCS natural frequencies above 5% of effective mass

In the next pages, figures show the shapes of the modes with effective mass greater than 5%.

Questo documento contiene informazioni di proprietà di CARLO GAVAZZI SPACE SpA. Tutti i diritti sono riservati.
All information contained in this document are property of CARLO GAVAZZI SPACE SpA. All right reserved.

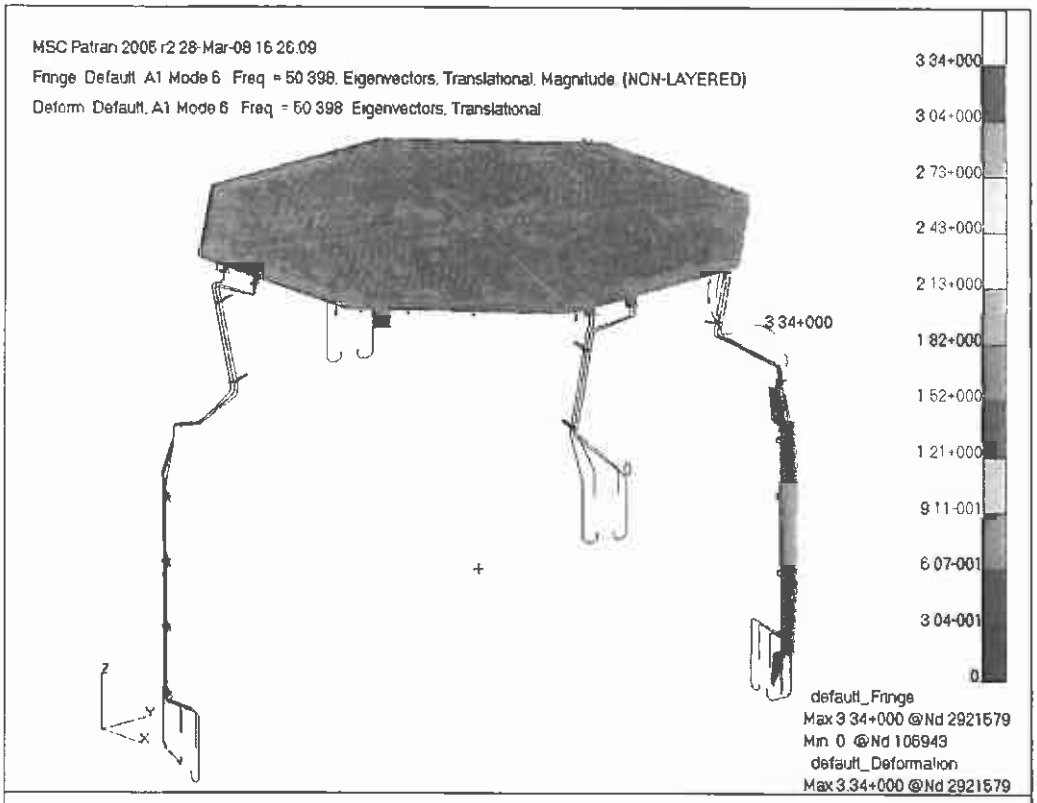

Figure 8-1: mode 6 at 50.40 Hz

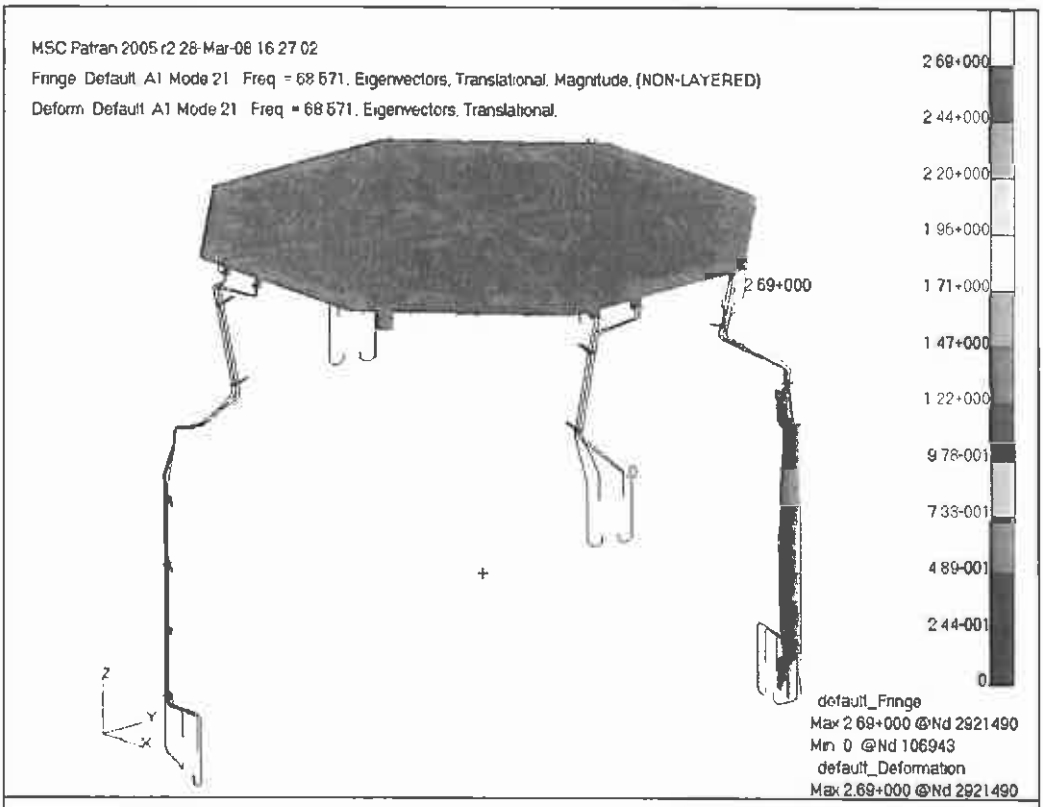

Figure 8-2: mode 21 at 68.57 Hz

Questo documento contiene informazioni di proprietà di CARLO GAVAZZI SPACE SpA. Tutti i diritti sono riservati.
All information contained in this document are property of CARLO GAVAZZI SPACE SpA. All right reserved.

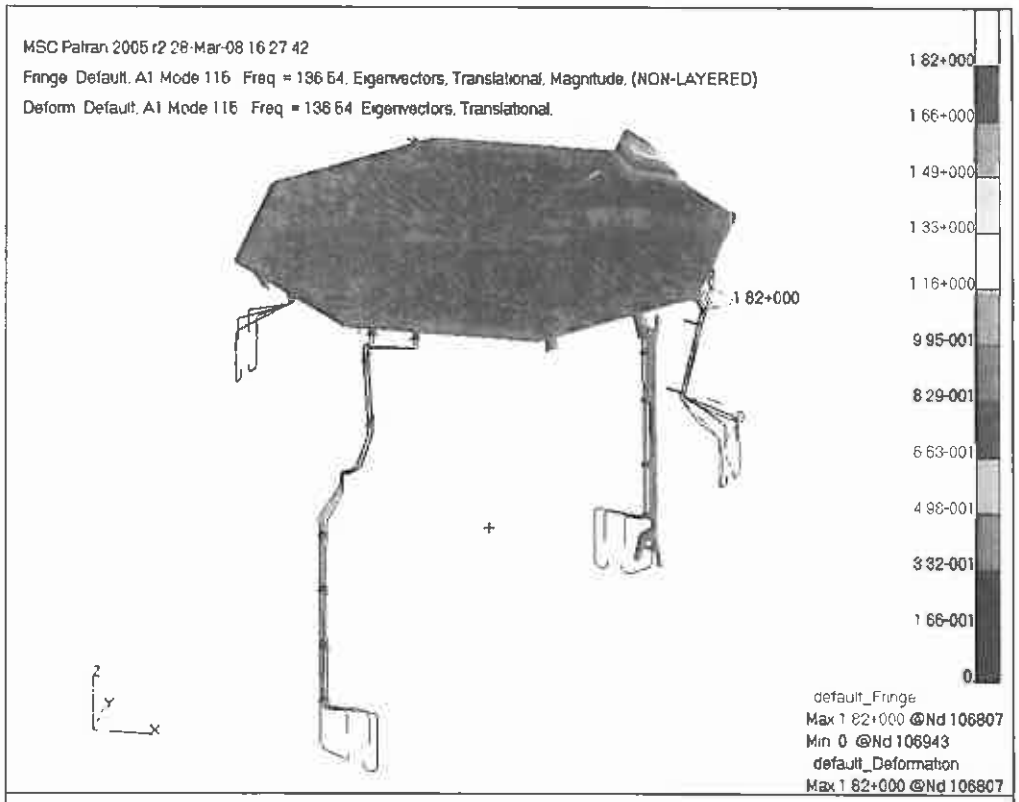

Figure 8-3: mode 115 at 136.54 Hz

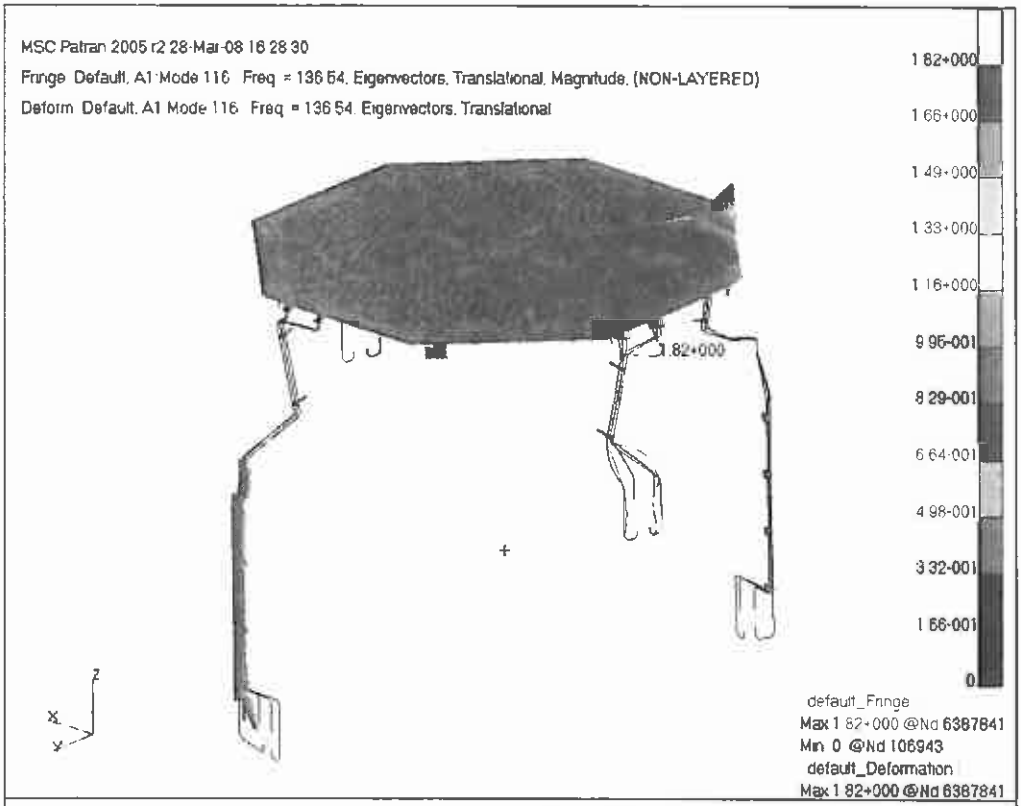

Figure 8-4: mode 116 at 136.54 Hz

Questo documento contiene informazioni di proprietà di CARLO GAVAZZI SPACE SpA. Tutti i diritti sono riservati.
All information contained in this document are property of CARLO GAVAZZI SPACE SpA. All right reserved.

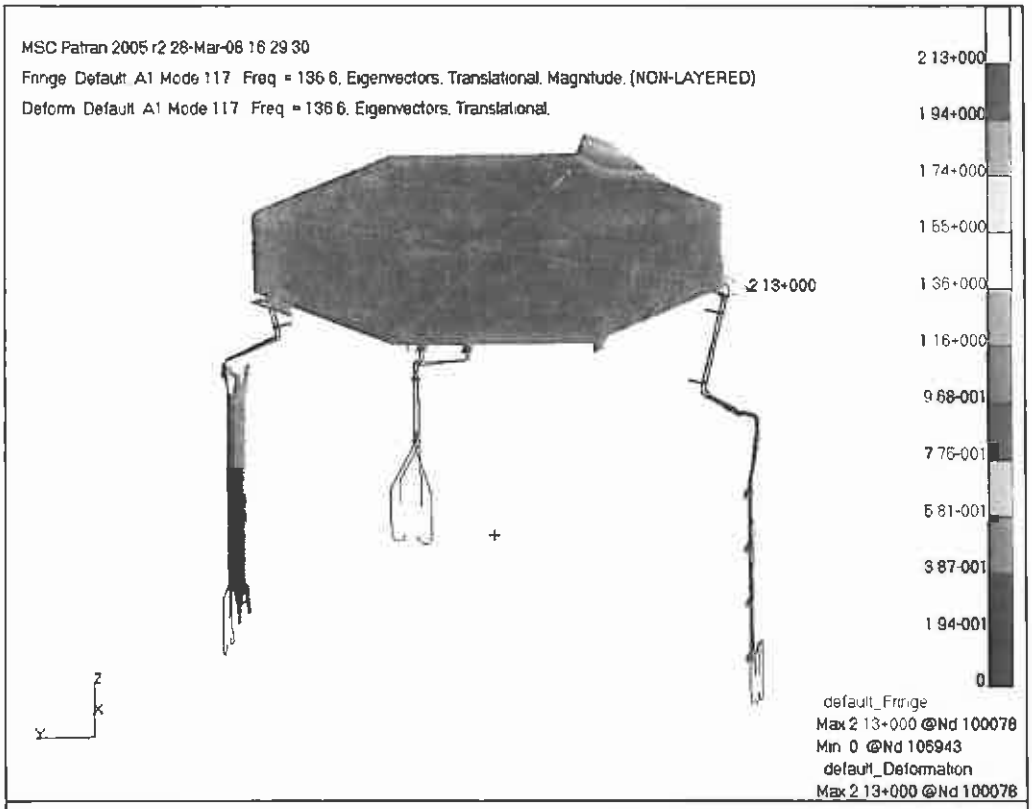

Figure 8-5: mode 117 at 136.60 Hz

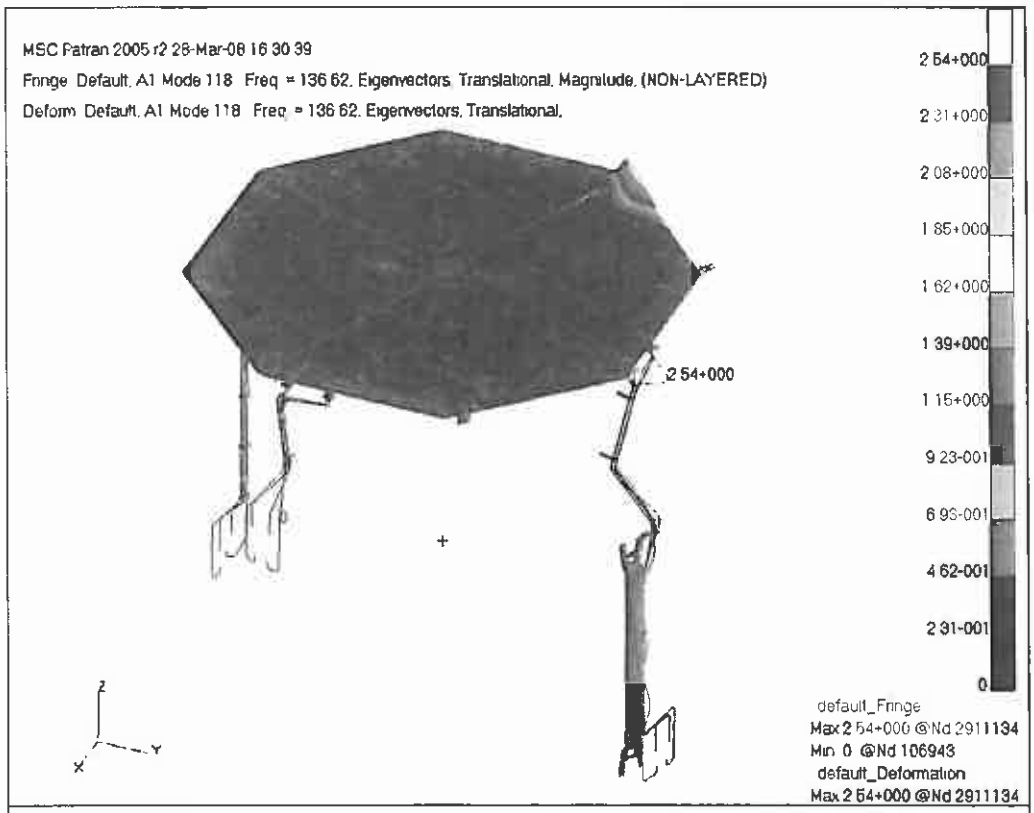

Figure 8-6: mode 118 at 136.62 Hz

Questo documento contiene informazioni di proprietà di CARLO GAVAZZI SPACE SpA. Tutti i diritti sono riservati.
All information contained in this document are property of CARLO GAVAZZI SPACE SpA. All right reserved.

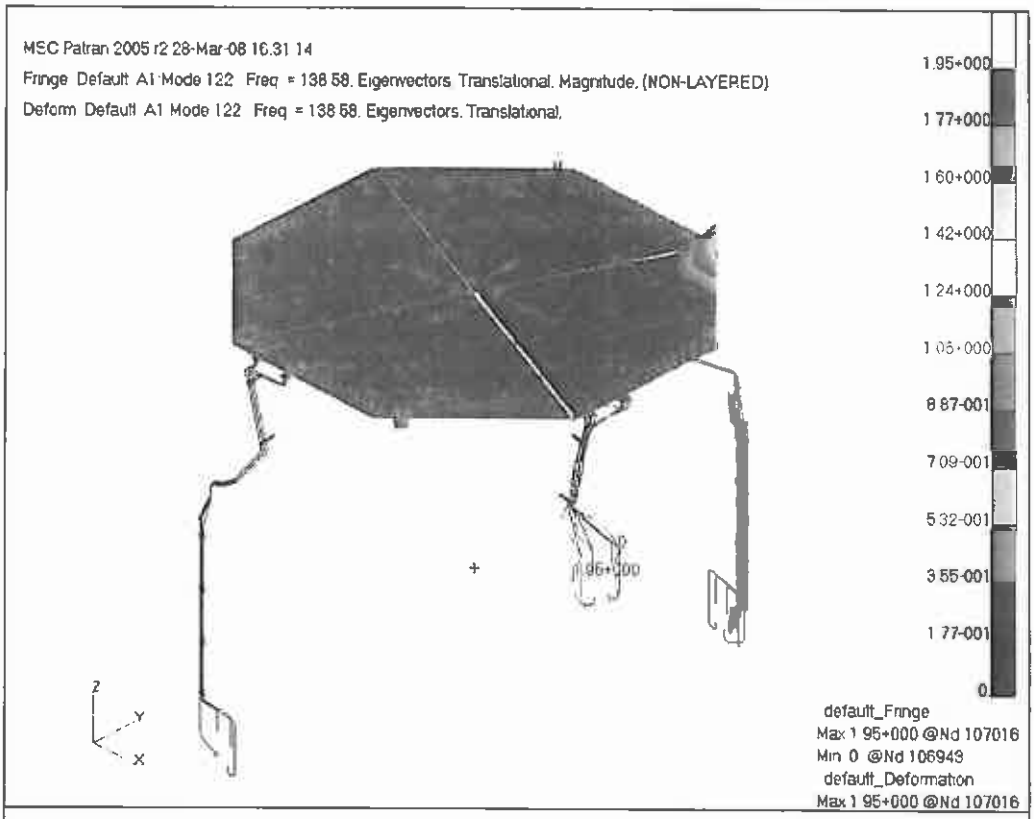

Figure 8-7: mode 122 at 138.58 Hz

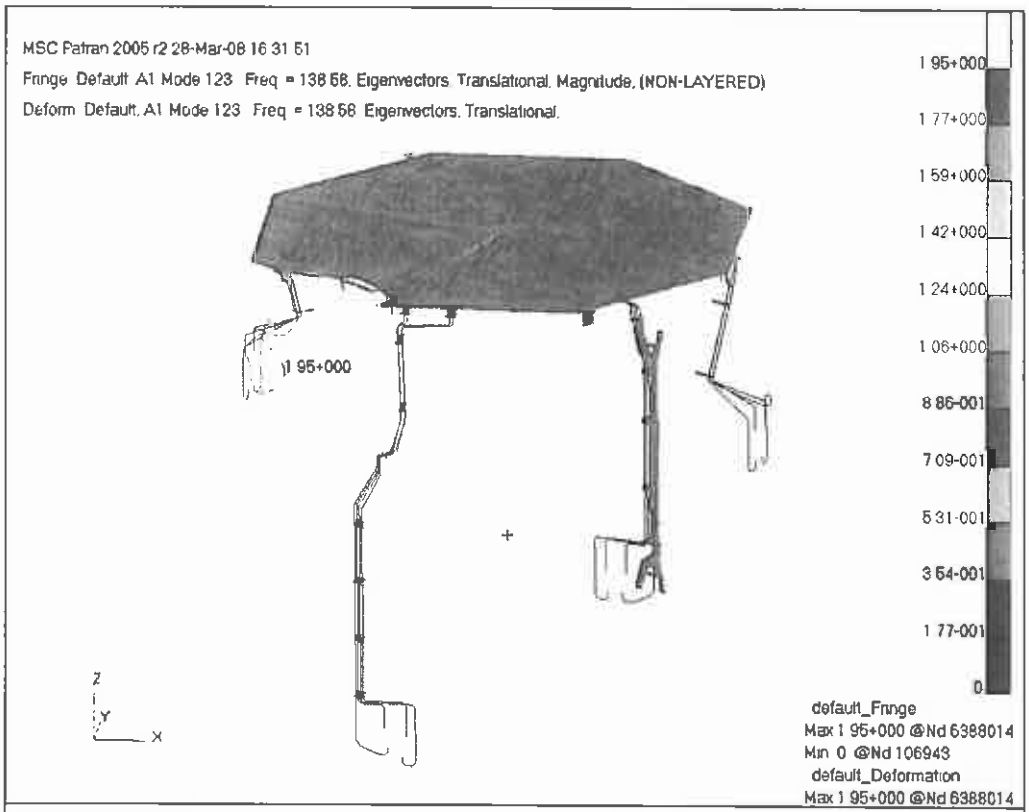

Figure 8-8: mode 123 at 138.58 Hz

Questo documento contiene informazioni di proprietà di CARLO GAVAZZI SPACE SpA. Tutti i diritti sono riservati.
All information contained in this document are property of CARLO GAVAZZI SPACE SpA. All right reserved.

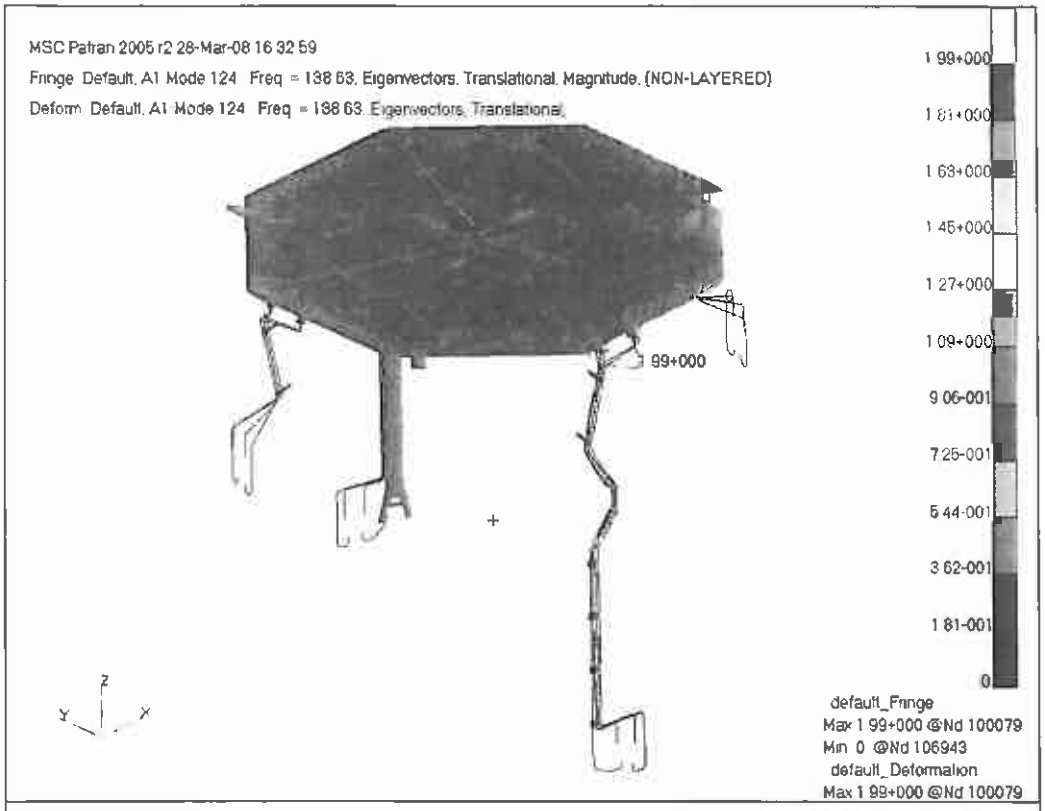

Figure 8-9: mode 124 at 138.63 Hz

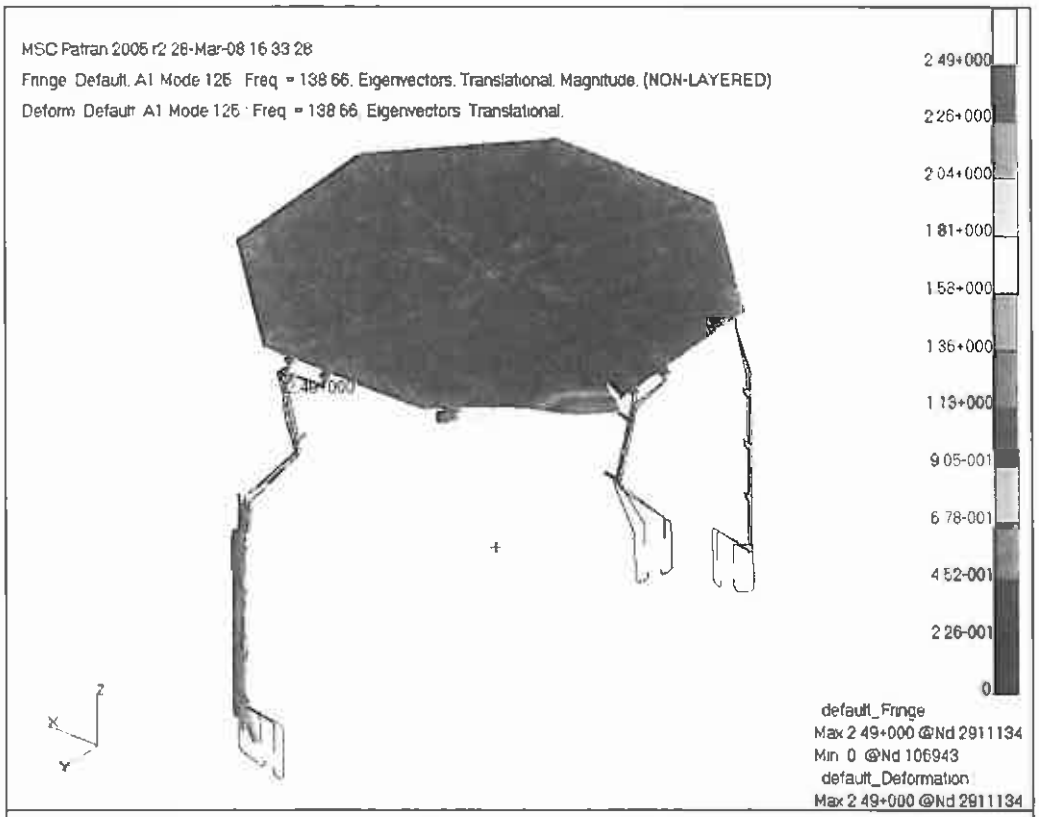

Figure 8-10: mode 125 at 138.66 Hz

Questo documento contiene informazioni di proprietà di CARLO GAVAZZI SPACE SpA. Tutti i diritti sono riservati.
All information contained in this document are property of CARLO GAVAZZI SPACE SpA. All right reserved.

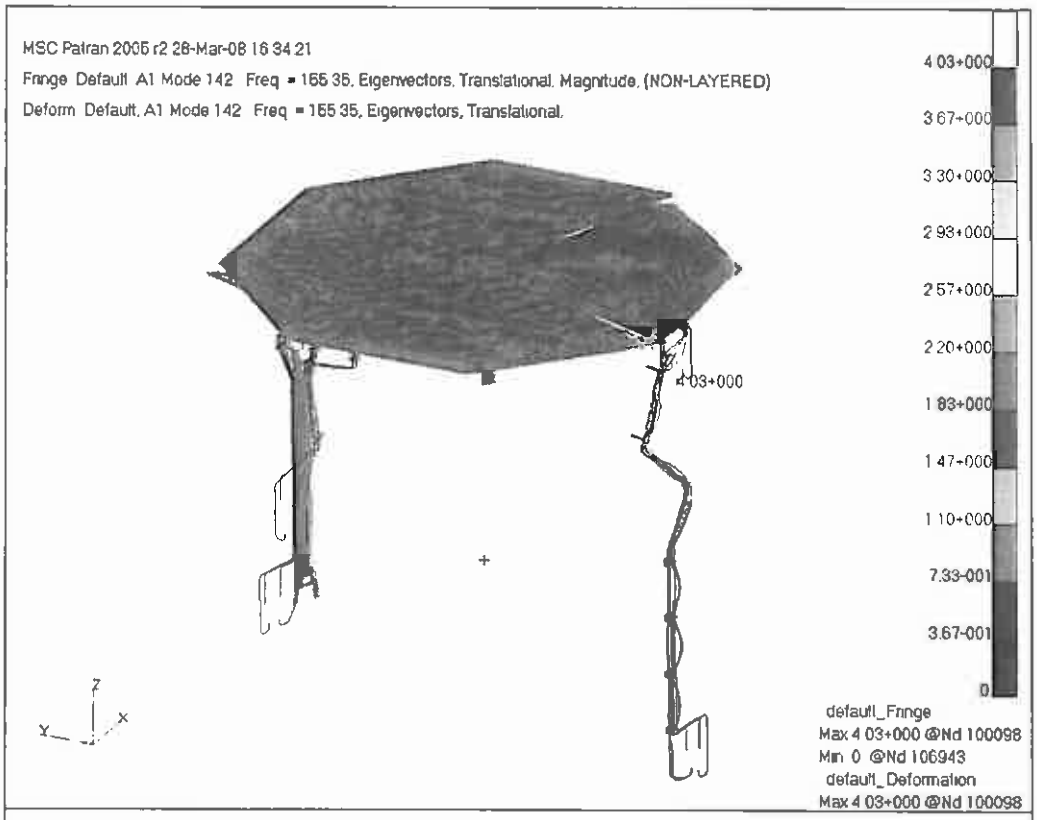

Figure 8-11: mode 142 at 155.35 Hz

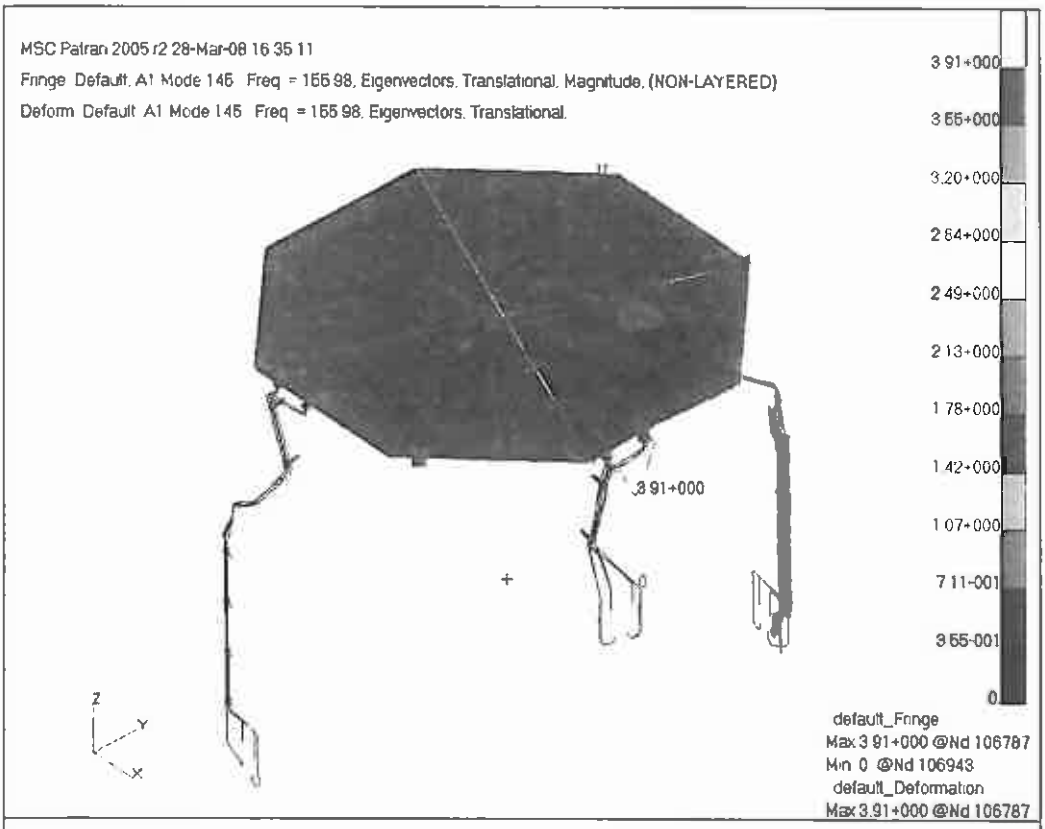

Figure 8-12: mode 145 at 155.98 Hz

Questo documento contiene informazioni di proprietà di CARLO GAVAZZI SPACE SpA. Tutti i diritti sono riservati.
All information contained in this document are property of CARLO GAVAZZI SPACE SpA. All right reserved.

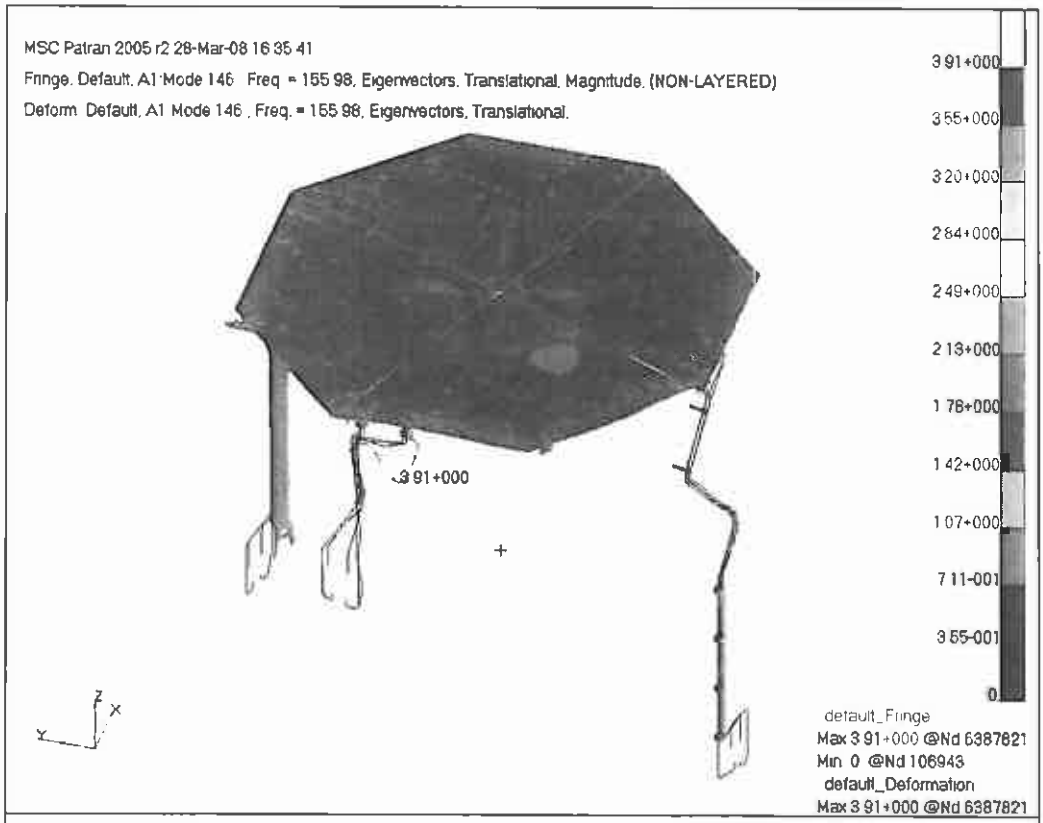

Figure 8-13: mode 146 at 155.98 Hz

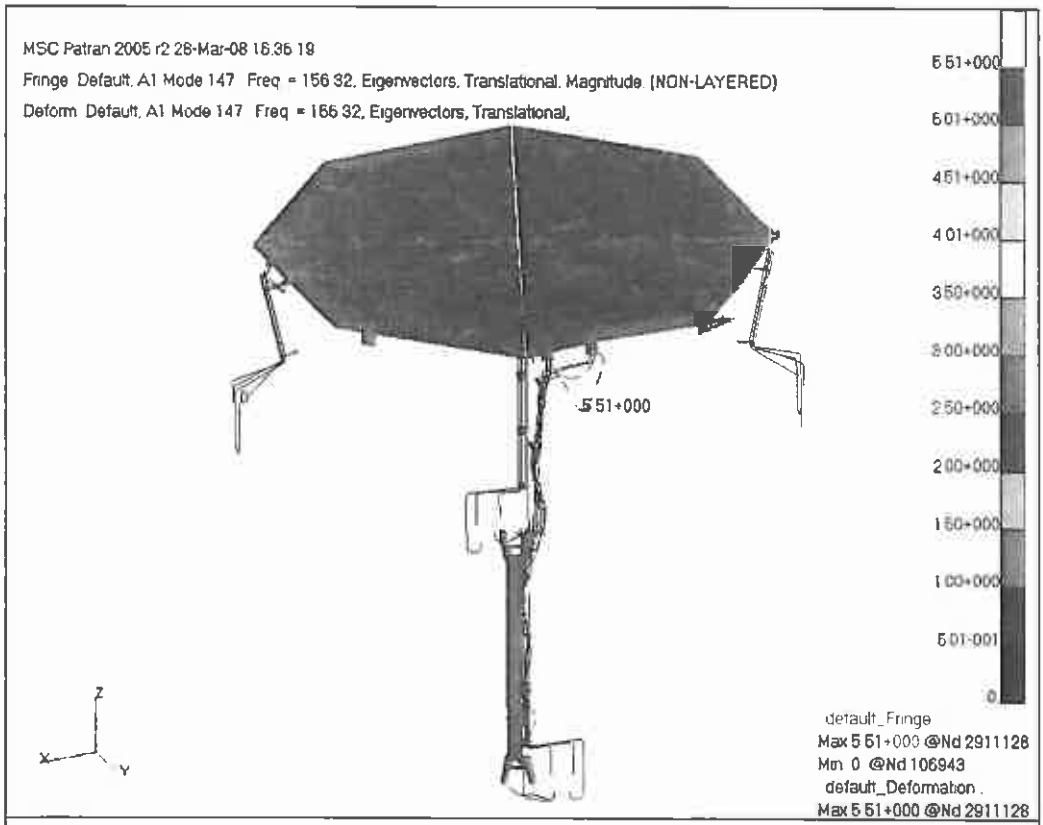

Figure 8-14: mode 147 at 156.32 Hz

Questo documento contiene informazioni di proprietà di CARLO GAVAZZI SPACE SpA. Tutti i diritti sono riservati.
All information contained in this document are property of CARLO GAVAZZI SPACE SpA. All right reserved.

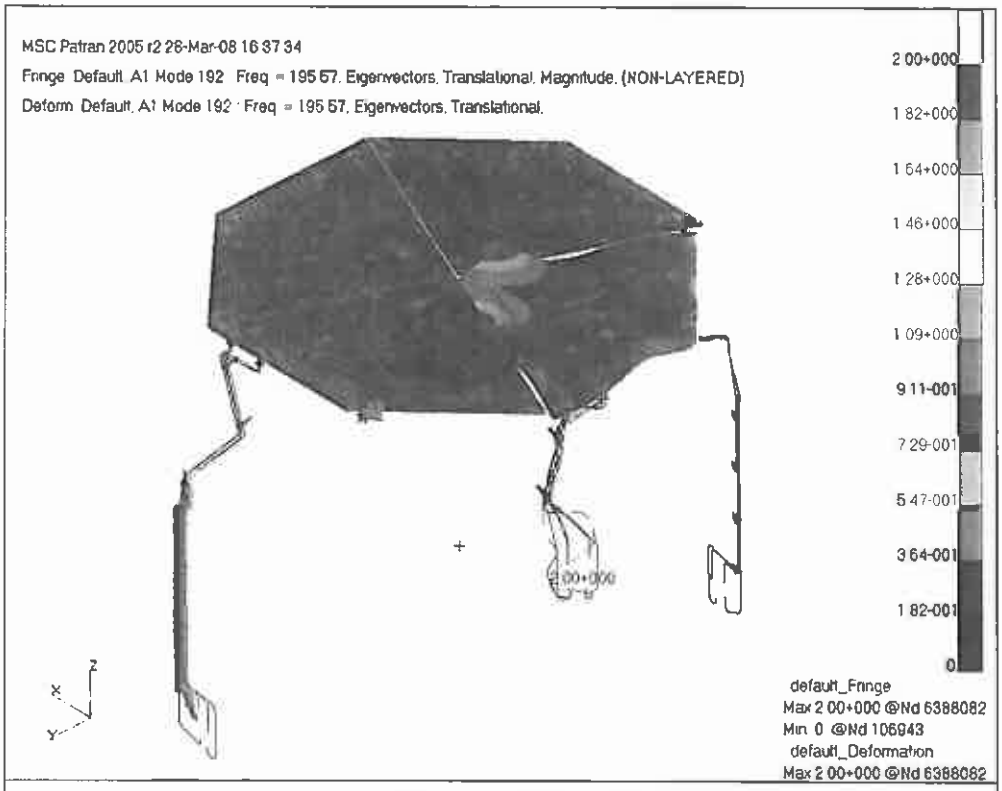

Figure 8-15: mode 192 at 195.57 Hz

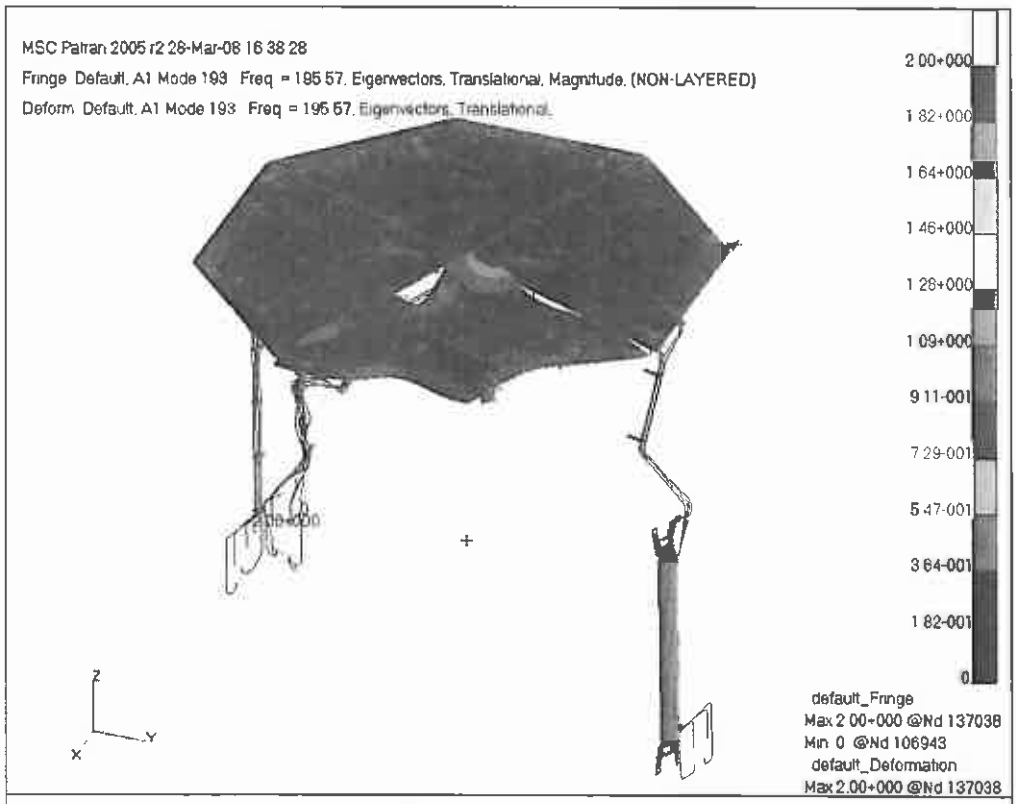

Figure 8-16: mode 193 at 195.57 Hz

Questo documento contiene informazioni di proprietà di CARLO GAVAZZI SPACE SpA. Tutti i diritti sono riservati.
All information contained in this document are property of CARLO GAVAZZI SPACE SpA. All right reserved.

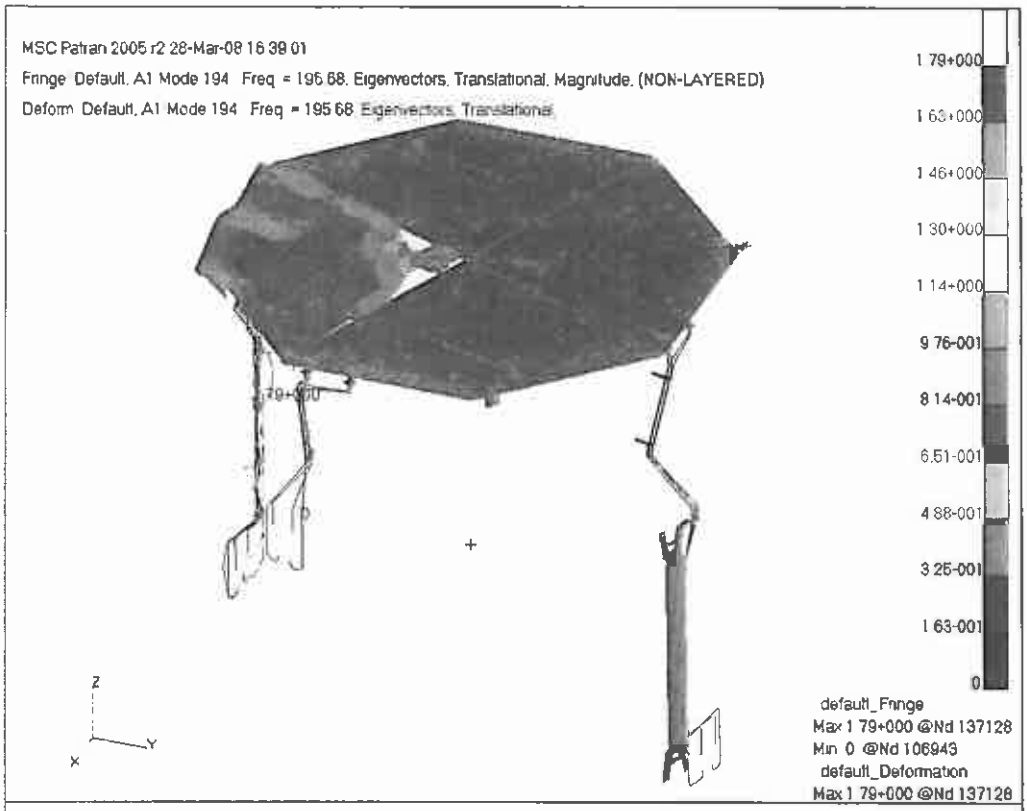

Figure 8-17: mode 194 at 195.68 Hz

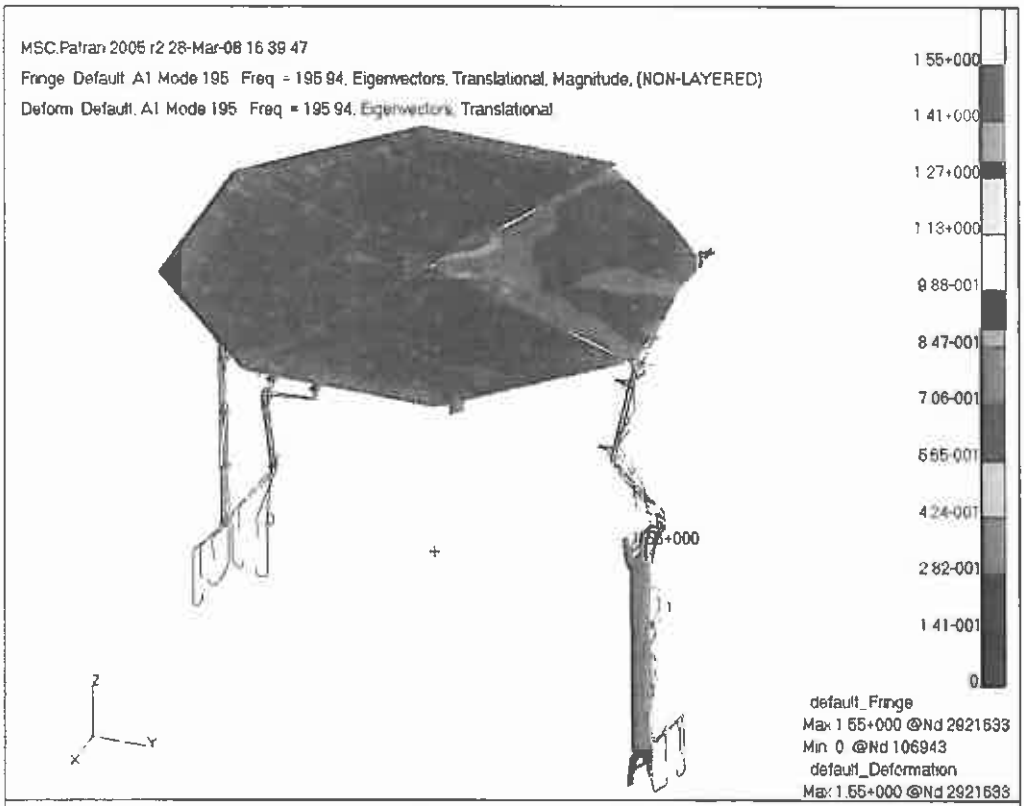

Figure 8-18: mode 195 at 195.94 Hz

Questo documento contiene informazioni di proprietà di CARLO GAVAZZI SPACE SpA. Tutti i diritti sono riservati.
All information contained in this document are property of CARLO GAVAZZI SPACE SpA. All right reserved.

8.2 STATIC ANALYSIS FOR NOMINAL CONFIGURATION

In the following sections, static analysis results are described for nominal configuration.
Three different types of results are provided:

- 8.2.1 DISPLACEMENT ANALYSIS FOR NOMINAL CONFIGURATION
- 8.2.2 STRESS ANALYSIS FOR NOMINAL CONFIGURATION
- 8.2.3 JOINT ANALYSIS FOR NOMINAL CONFIGURATION

8.2.1 DISPLACEMENT ANALYSIS FOR NOMINAL CONFIGURATION

The worst condition is for **NODE 2957790** for **Load Case 10**.
The resulting displacement is **1.94E-2 m**.
Following figure shows displacements for this subcase.

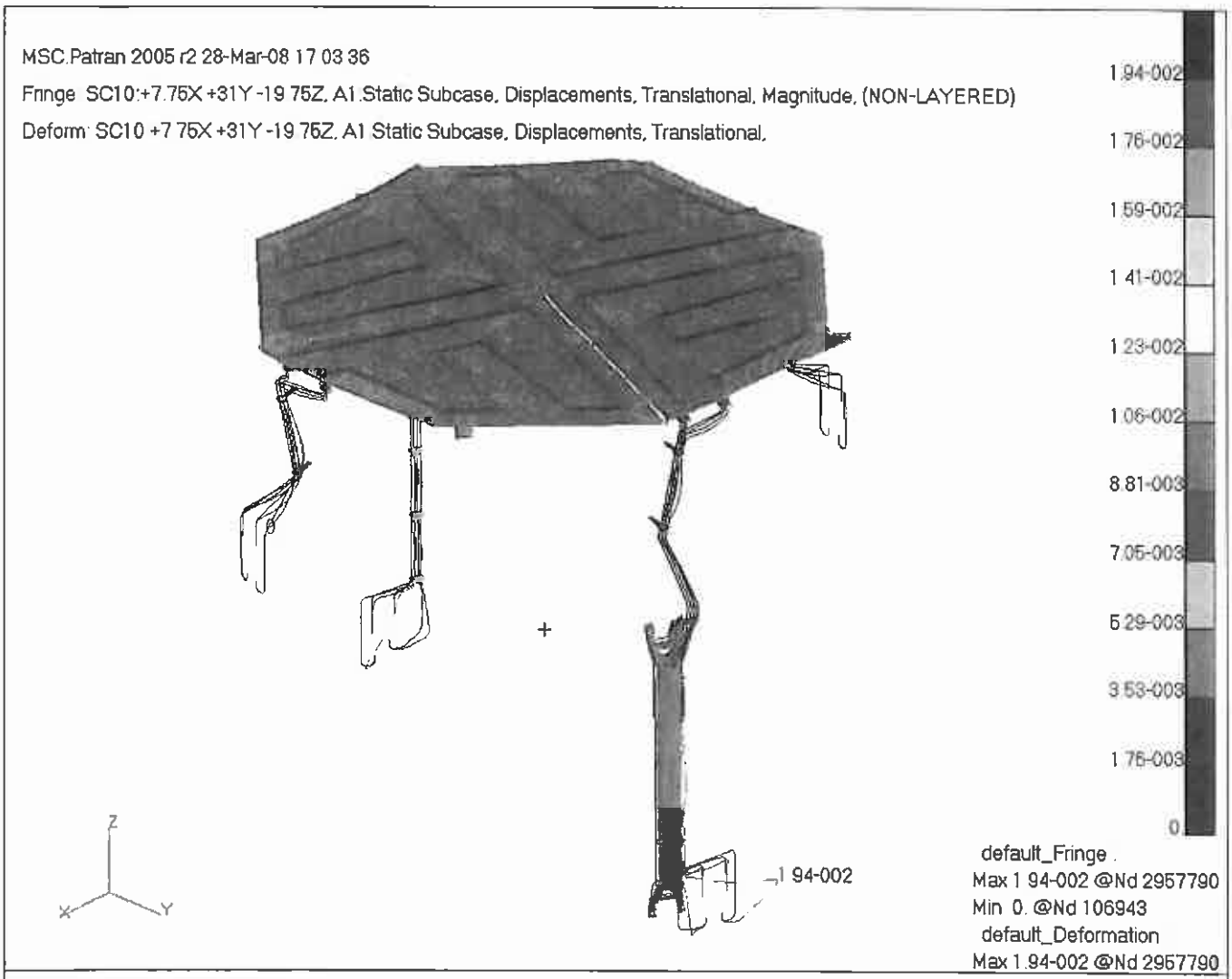

Figure 8-19: Deformation – Load case 10

8.2.2 STRESS ANALYSIS FOR NOMINAL CONFIGURATION

For each safety critical item the stress contour and MoS calculation is shown in the next pages.
The structure is divided in the following items:

Questo documento contiene informazioni di proprietà di CARLO GAVAZZI SPACE SpA. Tutti i diritti sono riservati.
All information contained in this document are property of CARLO GAVAZZI SPACE SpA. All right reserved.

- Stiff Brackets
- Gps Antenna Support
- Zenith Radiator Panel (skin)
- Zenith Radiator Panel (core)
- LHP Condenser Line
- Spokes
- Bimetallic Support Bracket
- LHP Transport Line
- LHP TRD Bracket
- VSB Support
- LHP VSB Bracket
- LHP VSB Stand-Off
- LHP VSB3 Upper Bracket

For the CFRP and GFRP items reported below, Tsai-Wu failure index contour is presented:

- Z-Bracket
- VSB Cover
- VSB Body

Summary of stress analysis results are shown in paragraph 8.2.2.17 .

Questo documento contiene informazioni di proprietà di CARLO GAVAZZI SPACE SpA. Tutti i diritti sono riservati.
All information contained in this document are property of CARLO GAVAZZI SPACE SpA. All right reserved.

8.2.2.1 STIFF BRACKETS

The worst condition is for **ELEMENT 222620** for **Load Case 29** at **Layer Z2**.
The resulting Von Mises stress is: **f_{VM} = 215 MPa**.
Following figures show stress distribution for this subcase.

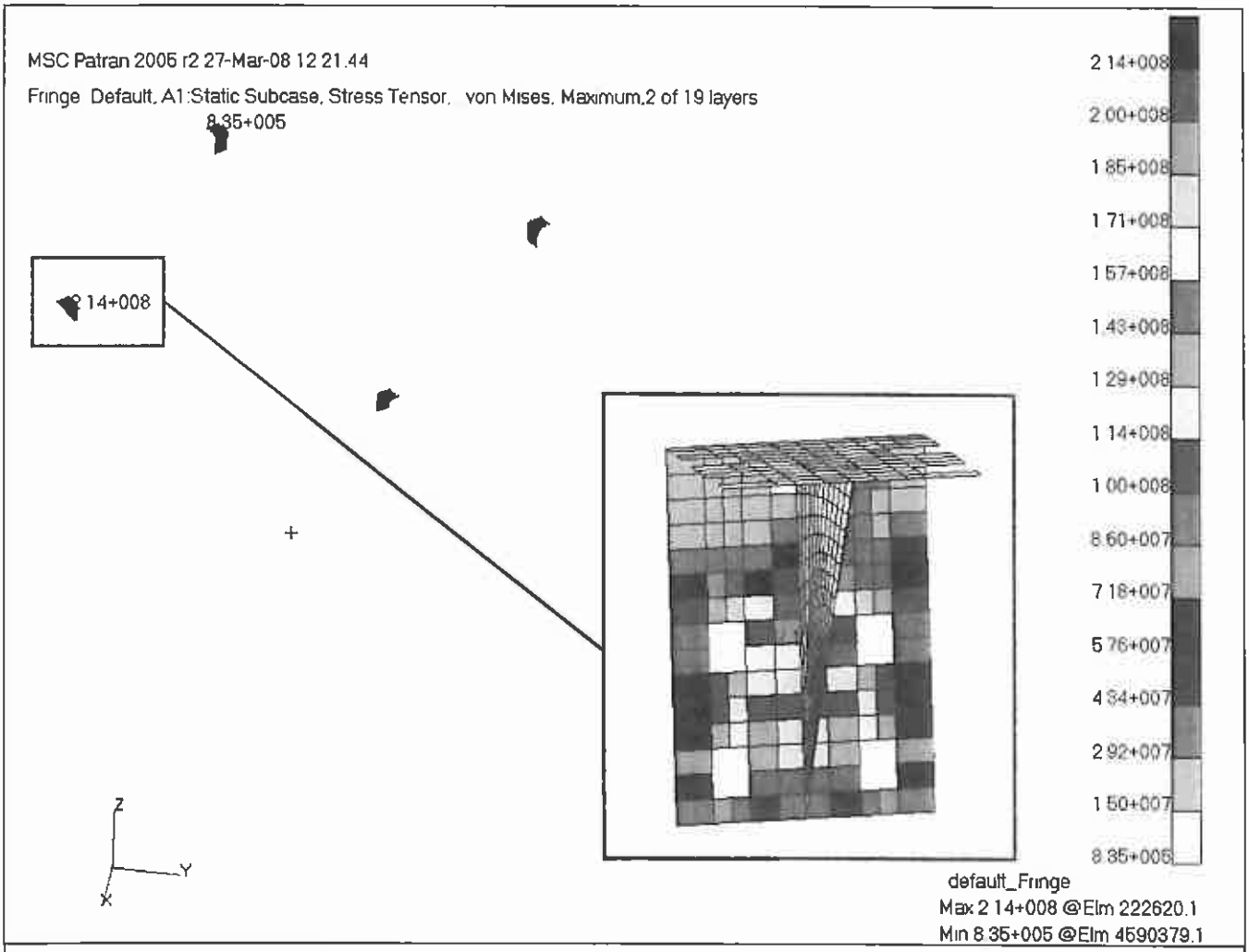

Figure 8-20: Stiff Bracket, Load Case 29, Layer Z2

Peak stress due to elements near bolts is not considered and bearing analysis is performed in chapter 8.2.3.2 .

Questo documento contiene informazioni di proprietà di CARLO GAVAZZI SPACE SpA. Tutti i diritti sono riservati.
All information contained in this document are property of CARLO GAVAZZI SPACE SpA. All right reserved.

8.2.2.2 GPS ANTENNA SUPPORT

The worst condition is for **ELEMENT 231239** for **Load Case 29** at **Layer Z1**.
The resulting Von Mises stress is: f_{VM} **= 190 MPa**.
Following figures show stress distribution for this subcase.

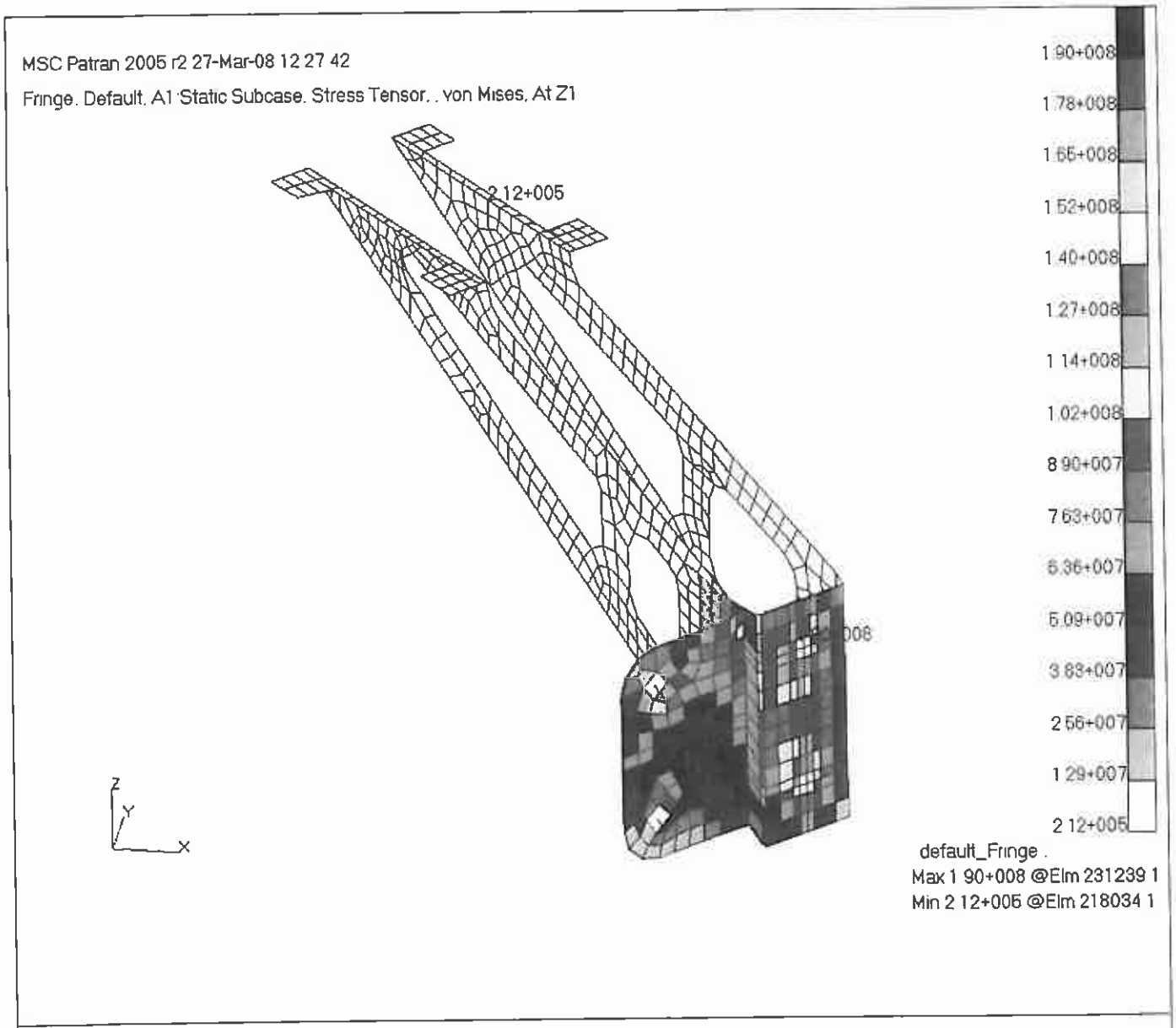

Figure 8-21: Gps Antenna Support, Load Case 29, Layer Z1

Questo documento contiene informazioni di proprietà di CARLO GAVAZZI SPACE SpA. Tutti i diritti sono riservati.
All information contained in this document are property of CARLO GAVAZZI SPACE SpA. All right reserved.

8.2.2.3 ZENITH RADIATOR PANEL (SKIN)

The worst condition is for **ELEMENT 4593473** for **Load Case 29** at **Layer Z2**.
The resulting Von Mises stress is: **f_{VM} = 108.5 MPa.**
Following figure shows stress distribution for this subcase.

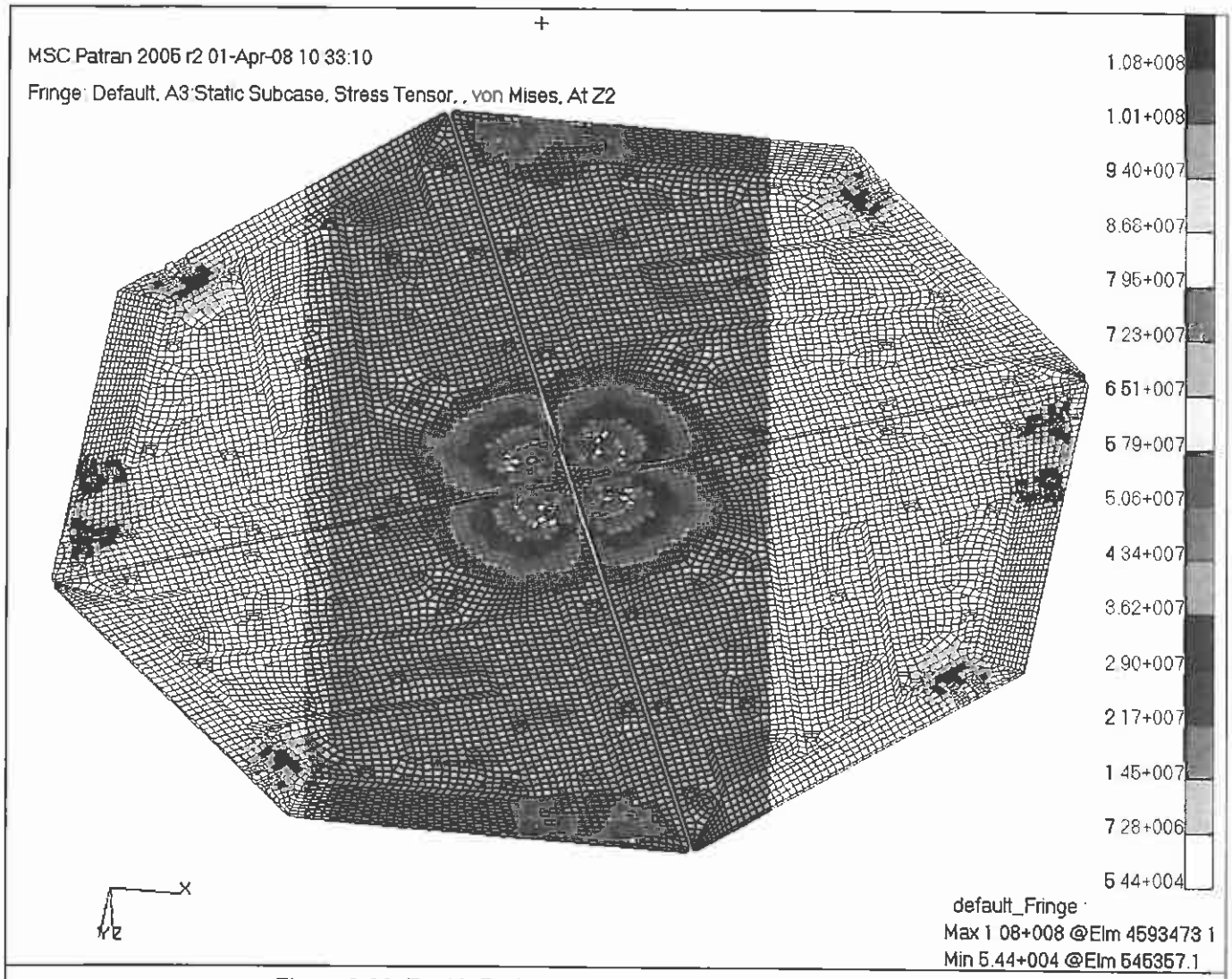

Figure 8-22: Zenith Radiator Panel (skin), Load Case 29, Layer Z2

Questo documento contiene informazioni di proprietà di CARLO GAVAZZI SPACE SpA. Tutti i diritti sono riservati.
All information contained in this document are property of CARLO GAVAZZI SPACE SpA. All right reserved.

8.2.2.4 ZENITH RADIATOR PANEL (CORE)

The worst condition is for **ELEMENT 1915634** for **Load Case 25**.
The resulting Maximum Shear stress is: f_{SH} **= 0.4 MPa.**
Following figures show stress distribution for this subcase.

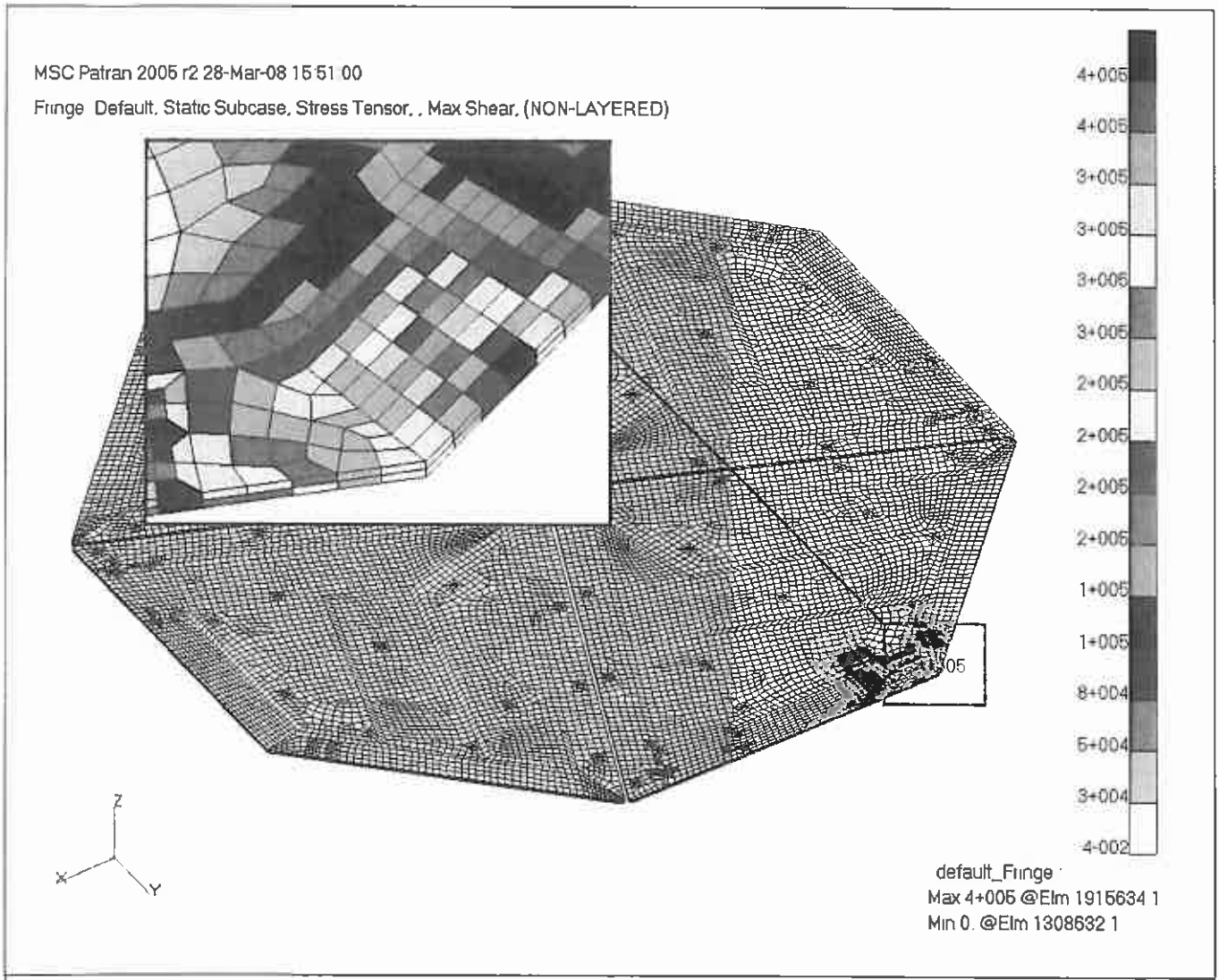

Figure 8-23: Zenith Radiator Panel (core), Load Case 25

Questo documento contiene informazioni di proprietà di CARLO GAVAZZI SPACE SpA. Tutti i diritti sono riservati.
All information contained in this document are property of CARLO GAVAZZI SPACE SpA. All right reserved.

8.2.2.5 LHP CONDENSER LINE

The worst condition is for **ELEMENT 147026** for **Load Case 29**.
The resulting Maximum Combined stress is: f_{MC} **= 58.8 MPa**.
Following figures show stress distribution for this subcase.

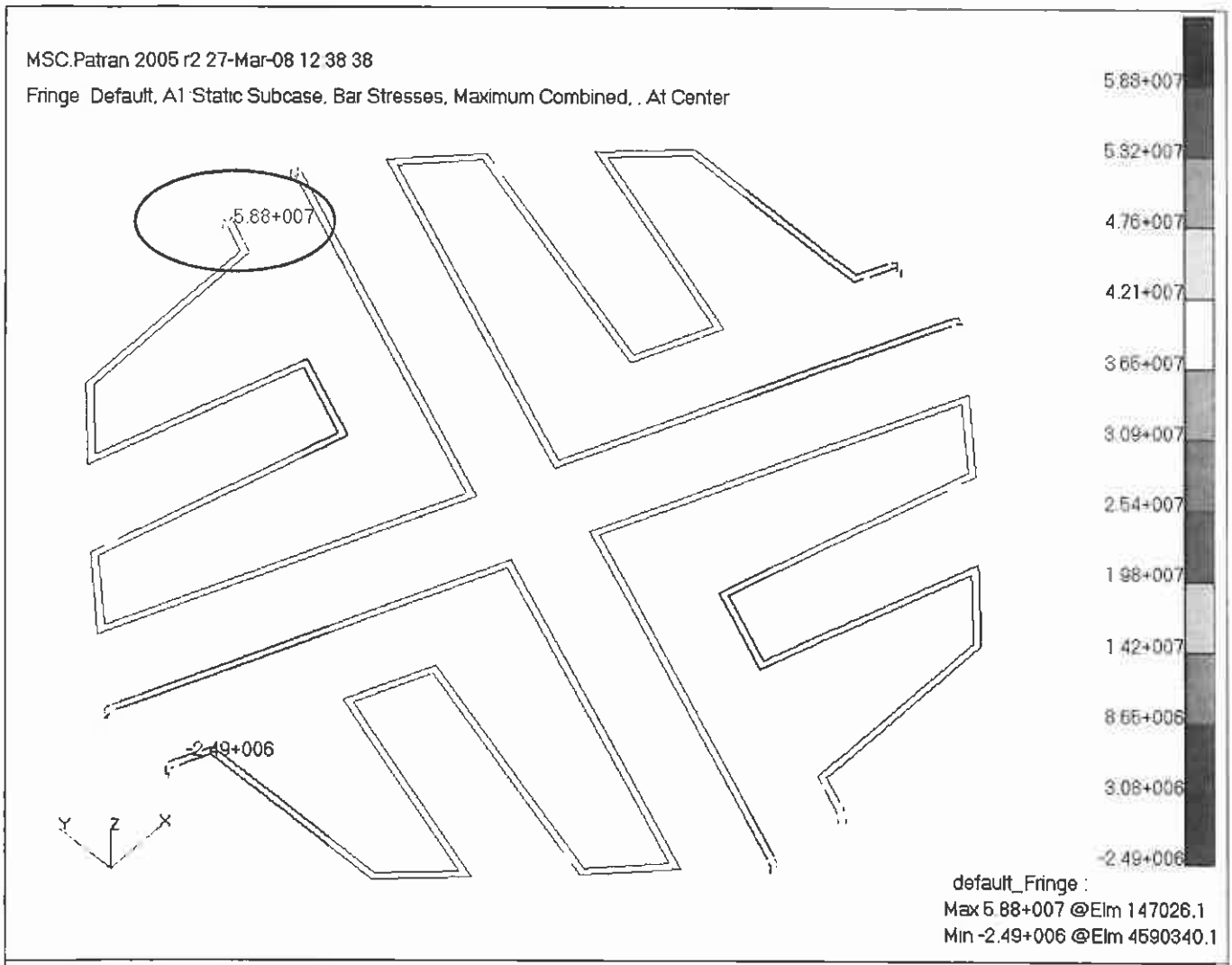

Figure 8-24: LHP Condenser Line, Load Case 29

Peak stresses in bar elements due to rigid connection elements (RBE2) are not representative, therefore they are not considered. However the obtained stress is high and the calculated Margins of Safety are negative (even without the internal pressure contribution):

$$MoS_Y = -0.52$$
$$MoS_U = -0.19$$

This situation occurs only for the thermoelastic load case, while for the inertial and EVA load the condenser line shows positive margins.
In order to have a more realistic behaviour description a non-linear approach has been considered.

Questo documento contiene informazioni di proprietà di CARLO GAVAZZI SPACE SpA. Tutti i diritti sono riservati.
All information contained in this document are property of CARLO GAVAZZI SPACE SpA. All right reserved.

8.2.2.5.1 LHP CONDENSER LINE NON LINEAR ANALYSIS RESULTS

The used material Al3103-O has been selected to have a flexible material able to follow complex routing and to adapt its shape to the radiator skin surface. The following figure shows large plastic range of the selected material.

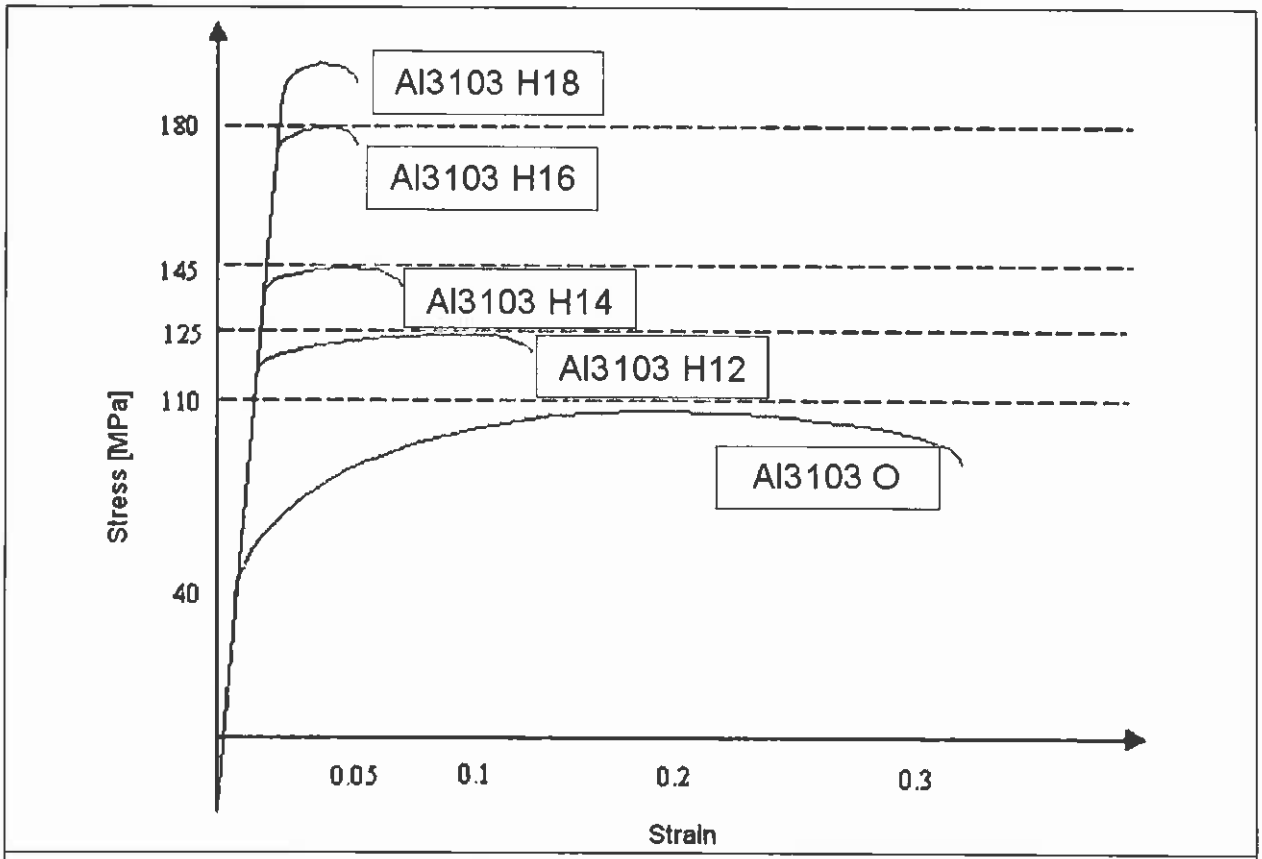

Figure 8-25 Al3103 behavior wrt the different hardness

For this reason a local yield of the condenser line is acceptable assuring the structural integrity of the pipelines at ultimate load.
A non linear analysis has been performed on the condenser line part with the highest stress in order to obtain a more realistic behaviour of the structure.
The following figure shows the detailed shell model implemented to analyze this part.

Questo documento contiene informazioni di proprietà di CARLO GAVAZZI SPACE SpA. Tutti i diritti sono riservati.
All information contained in this document are property of CARLO GAVAZZI SPACE SpA. All right reserved.

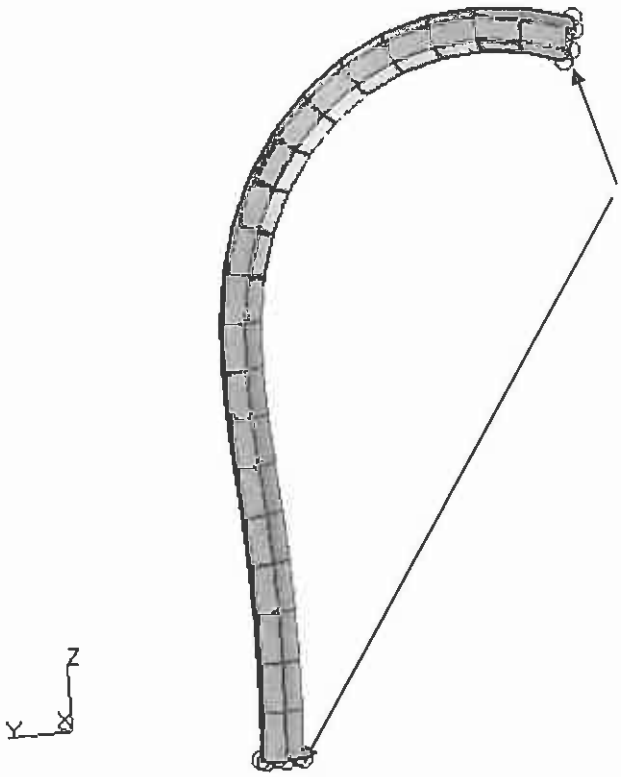

RBE2 elements are used to simulate the connection between this pipeline part and remaining condenser line parts.
They are used to apply to this pipe part the boundary condition taking from the CRYO TCS complete model during the thermal load case.

Analysis coordinate system (the same of the complete model)

Figure 8-26 Detailed condenser line shell model used to perform the non linear analysis

The Al3103 – O Nastran card used is shown in the following table.

NASTRAN CARD:	MAT1	1	6.89+10	2.5+10	.33	2730.	2.17-5	293.15
	MATS1	1		PLASTIC	2.+8	1	1	3.5+7

Table 8-2: Al3103 – O in FE model for the non-linear analysis

The used load case is a superimposition of three different contributions:

- Enforced Displacement resulting from the CRYO TCS complete model;
- The temperature load case applied to this condenser line part;
- The pipe internal pressure due to propylene.

The following figures show the load cases entity.

Questo documento contiene informazioni di proprietà di CARLO GAVAZZI SPACE SpA. Tutti i diritti sono riservati.
All information contained in this document are property of CARLO GAVAZZI SPACE SpA. All right reserved.

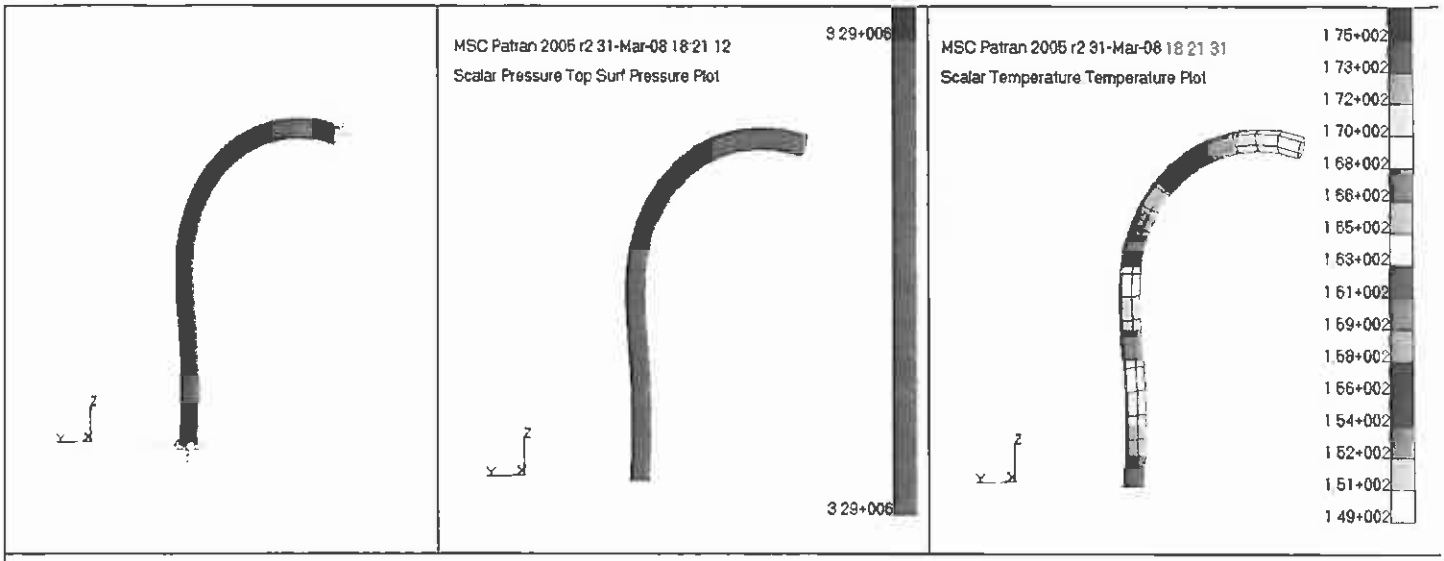

Figure 8-27 Non linear load case entity. On left the enforced displacement, at center the internal pressure load and on right the temperature load

In order to validate the model a linear analysis has been performed to this stand alone pipe using the described combined load case and the obtained solution matched the results shown in the paragraph 8.2.2.5 .

The ultimate Safety Factor (chapter 7.1) has been applied directly to the load case to allow the correct calculation of Margin of Safety for the non-linear analysis.
The following figures show the loaded worst stress condition and both the unloaded residual stress and displacement taking into account the load case with the Safety Factor.

The worst condition is for **ELEMENT 2149723** for loaded configuration.
The resulting Maximum Combined stress is: $\mathbf{f_{MC} = 36.3\ MPa}$.
Following figure shows stress distribution for this subcase.

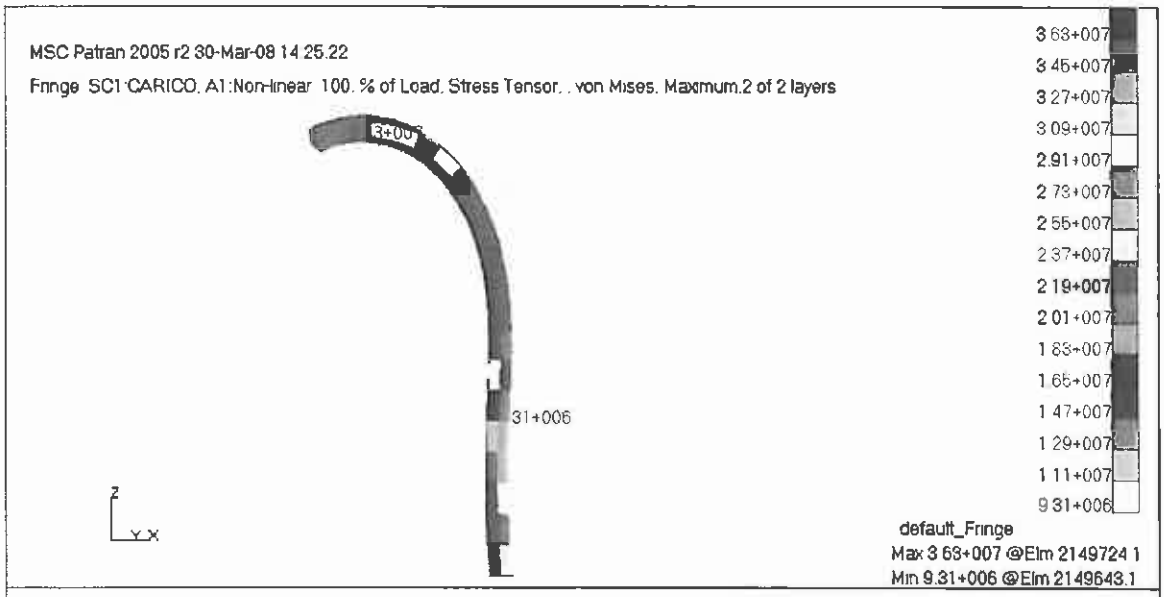

Figure 8-28: LHP Condenser Line, loaded non-linear solution

Questo documento contiene informazioni di proprietà di CARLO GAVAZZI SPACE SpA. Tutti i diritti sono riservati.
All information contained in this document are property of CARLO GAVAZZI SPACE SpA. All right reserved.

The worst condition is for **ELEMENT 2149726** for unloaded configuration (residual stress).
The resulting Maximum Combined stress is: f_{MC} **= 37.4 MPa**.
Following figure shows stress distribution for this subcase.

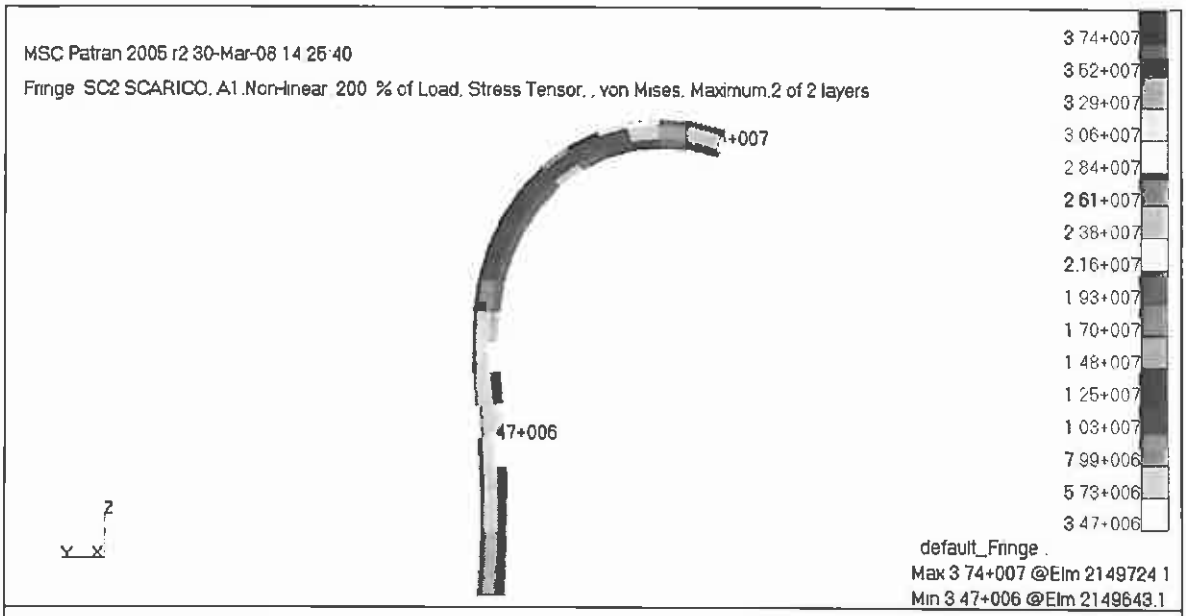

Figure 8-29: LHP Condenser Line, residual stress on pipe

The resulting maximum residual displacement is **1.58E-5 m**.
Following figure shows displacements for this subcase.

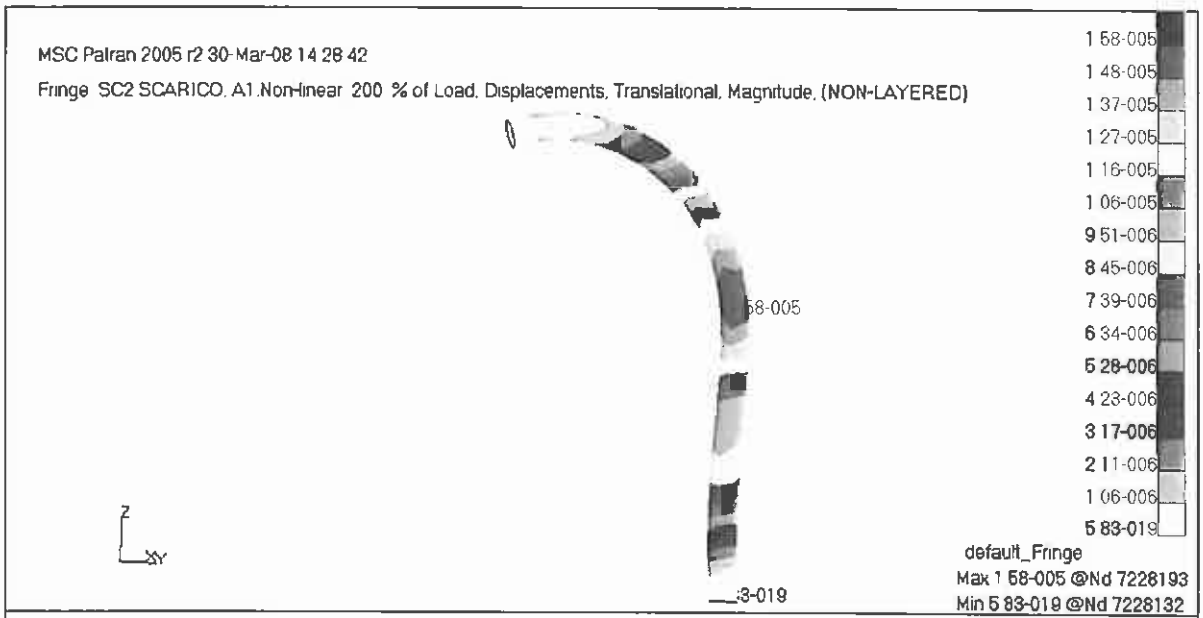

Figure 8-30: LHP Condenser Line, residual deformation

Questo documento contiene informazioni di proprietà di CARLO GAVAZZI SPACE SpA. Tutti i diritti sono riservati.
All information contained in this document are property of CARLO GAVAZZI SPACE SpA. All right reserved.

8.2.2.6 SPOKES

The worst condition is for **ELEMENT 4587469** for **Load Case 29**.
The resulting Maximum Combined stress is: f_{MC} **= 328 MPa**.
Following figures show stress distribution for this subcase.

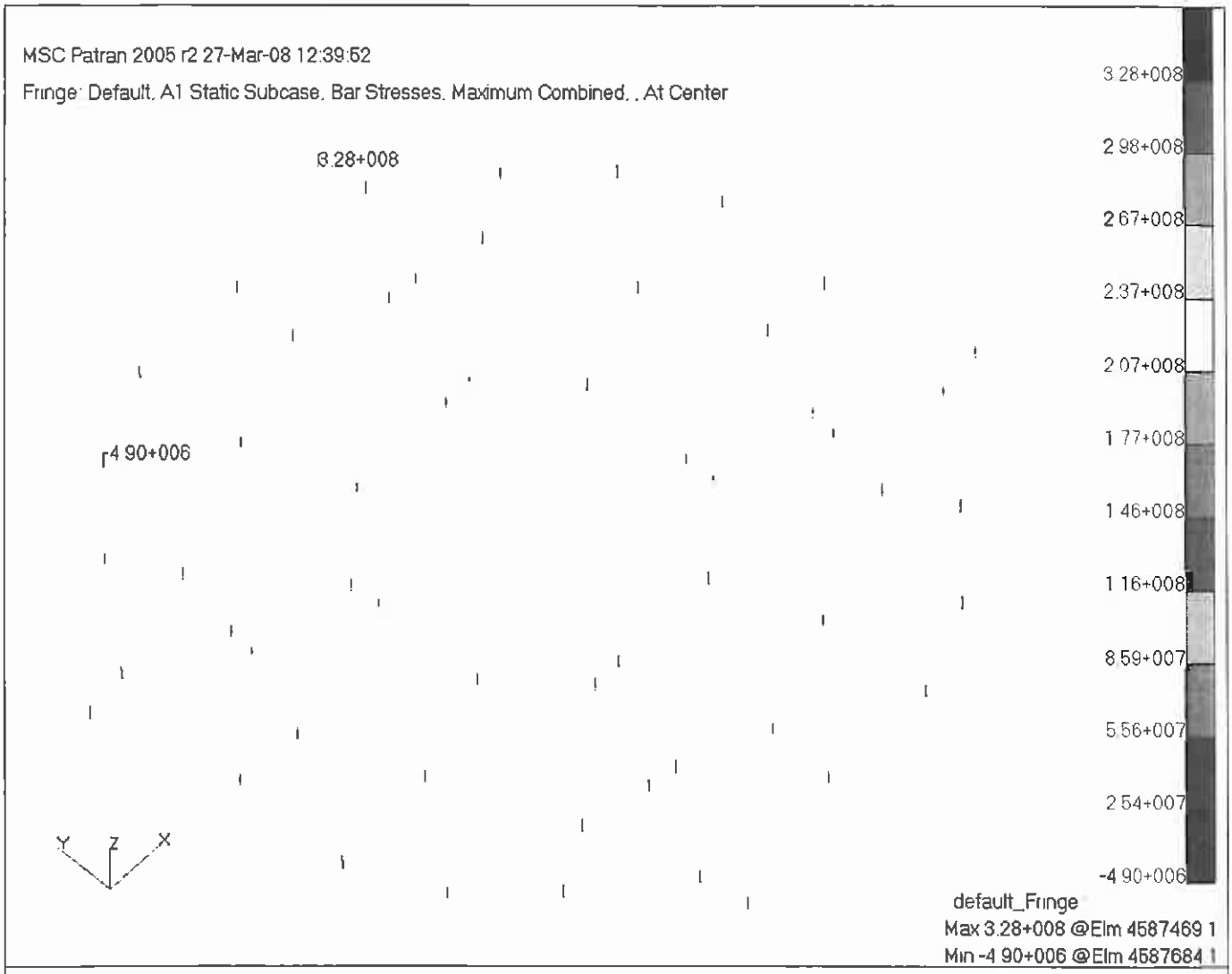

Figure 8-31: Spokes, Load Case 29

Questo documento contiene informazioni di proprietà di CARLO GAVAZZI SPACE SpA. Tutti i diritti sono riservati.
All information contained in this document are property of CARLO GAVAZZI SPACE SpA. All right reserved.

8.2.2.7 BIMETALLIC SUPPORT BRACKETS

The worst condition is for **ELEMENT 311061** for **Load Case 29** at **Layer Z1**.
The resulting Von Mises stress is: **f_{VM} = 38.8 MPa**.
Following figures show stress distribution for this subcase.

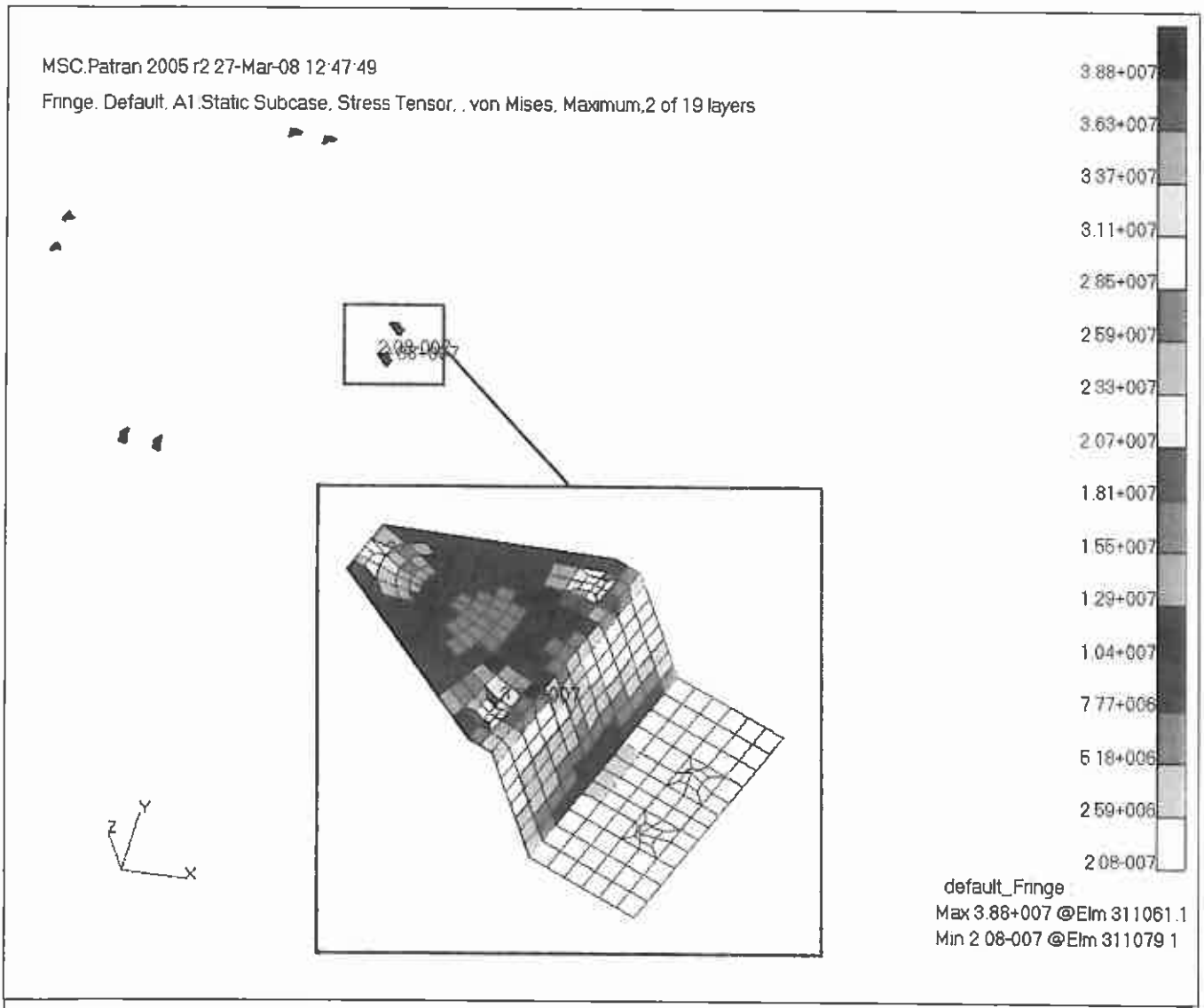

Figure 8-32: Bimetallic Support Bracket, Load Case 29, Layer Z1

Questo documento contiene informazioni di proprietà di CARLO GAVAZZI SPACE SpA. Tutti i diritti sono riservati.
All information contained in this document are property of CARLO GAVAZZI SPACE SpA. All right reserved.

8.2.2.8 LHP TRANSPORT LINE

The worst condition is for **ELEMENT 74548** for **Load Case 29**.
The resulting Maximum Combined stress is: f_{MC} **= 614 MPa**.
Following figures show stress distribution for this subcase.

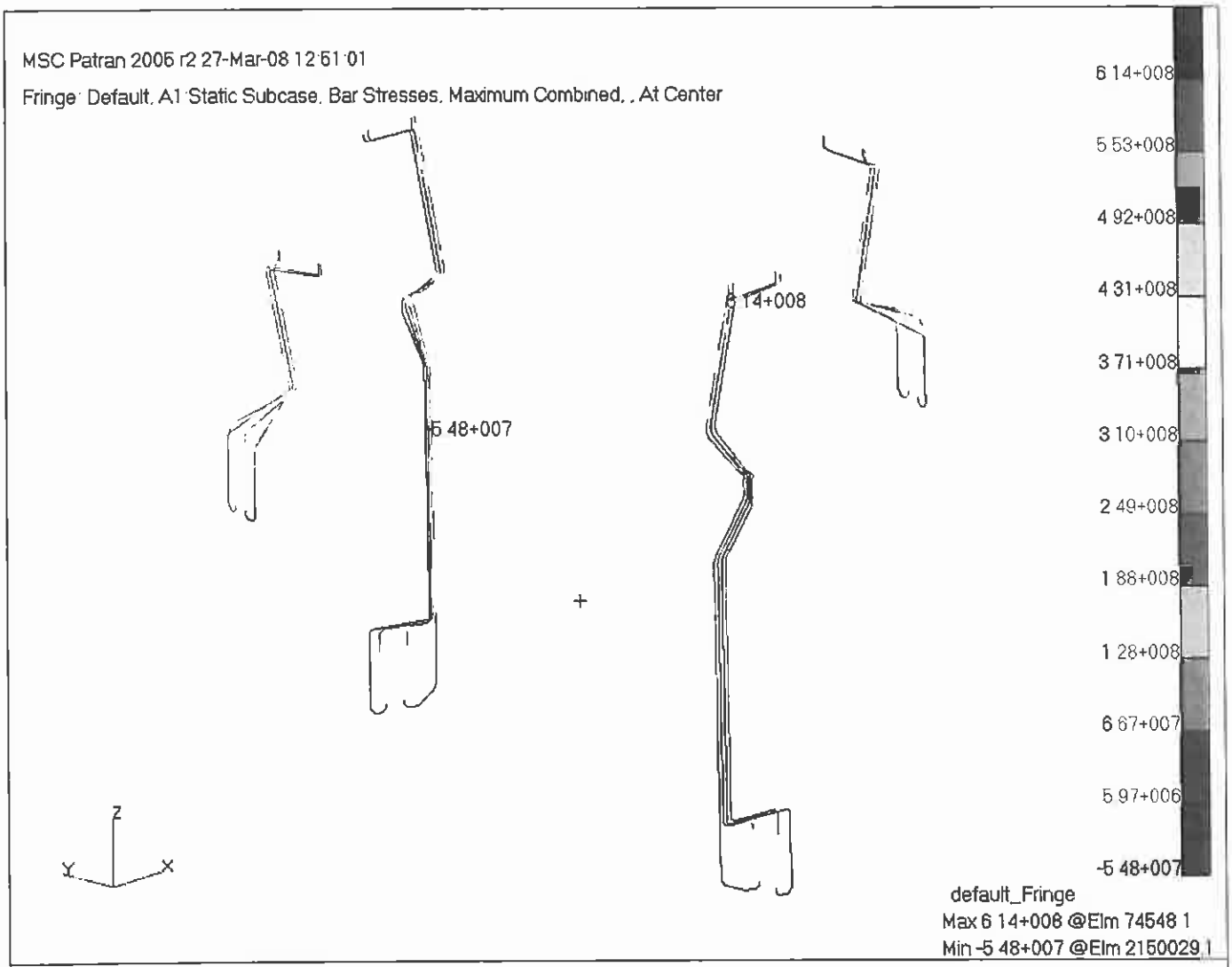

Figure 8-33: LHP Transport Line, Load Case 29

The MoS are negative both at yield and ultimate (even without the internal pressure contribution).

$$MoS_Y = -0.61$$
$$MoS_U = -0.55$$

As for the condenser, the LHP transport lines are very flexible and they have a low yield allowable stress in order to guarantee an high ductility since they have to be bended to follow complex and curved routing.
For this reason a partial yield of the pipeline can be acceptable.

Questo documento contiene informazioni di proprietà di CARLO GAVAZZI SPACE SpA. Tutti i diritti sono riservati.
All information contained in this document are property of CARLO GAVAZZI SPACE SpA. All right reserved.

Since the ultimate MoS entity is strongly higher than the condenser line a simple non-linear analysis has been considered not enough to verify the LHP transport line structural integrity wrt a cyclic load case (i.e.: the AMS power-off can occur 5 times per year); therefore a verification by test has been performed (RD 16 and RD 17).

As shown in the Figure 8-33 the maximum stress is located to the highest part of the pipeline in the middle between the upper TRD bracket and the bimetallic support bracket. The following figure shows the LHP transport line displacement in this area.

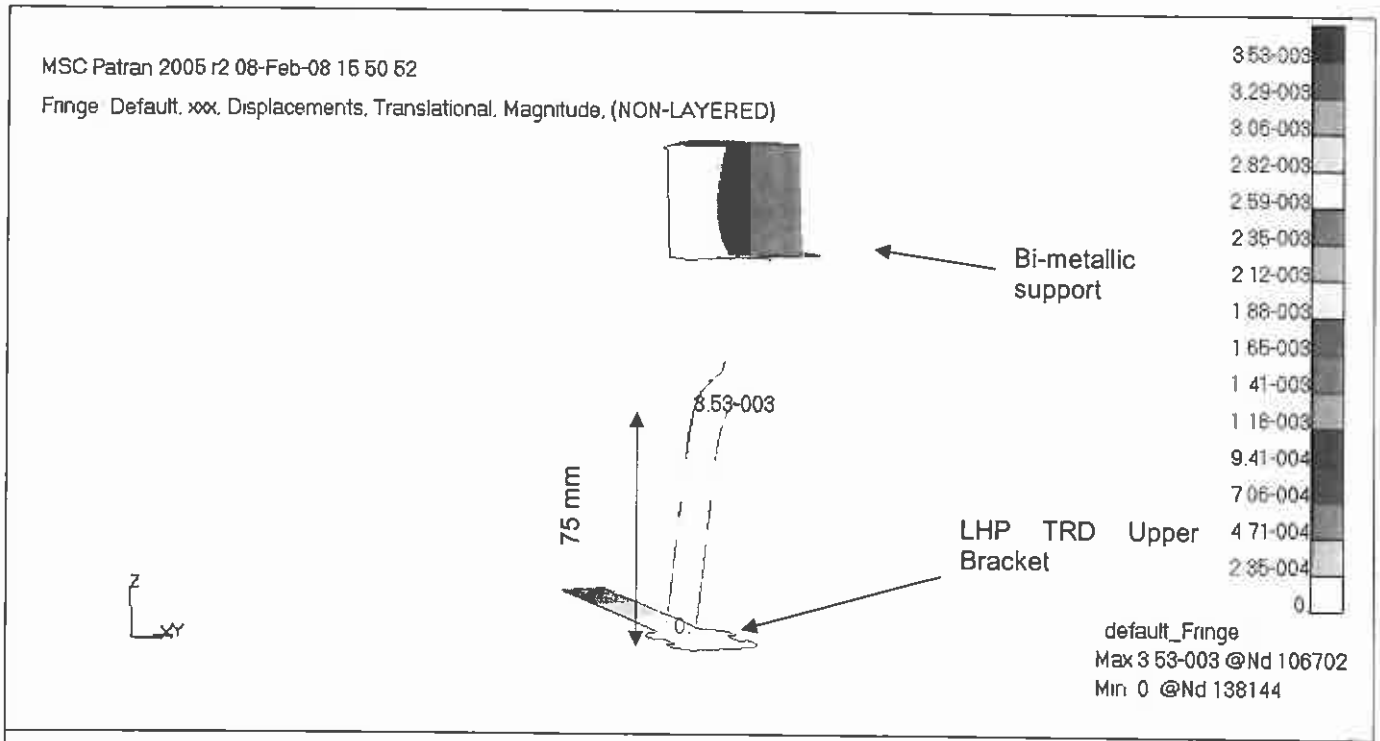

Figure 8-34: LHP Transport Line maximum displacement

In particular the pipe length between the upper TRD bracket and the bimetallic support bracket is 150 mm, while the maximum stress is at 75 mm far from the upper TRD bracket. For this reason a 75 mm specimen length has been considered, as representative of minimum free length of the pipe.
The maximum displacement on the vapour line is 3.5 mm, therefore a safety factor of 3 (~ 10.5 mm) has been applied to be conservative, the pressure contribution is negligible wrt the test load case (the additional stress due to the internal pressure of 13 bar is in the order of magnitude of 5 MPa). A complete test setup and procedure description is provided in RD 16.

The LHP transport line bending test has been performed successfully (RD 17), therefore the pipe structural integrity has been verified by test under applicable load.

Questo documento contiene informazioni di proprietà di CARLO GAVAZZI SPACE SpA. Tutti i diritti sono riservati.
All information contained in this document are property of CARLO GAVAZZI SPACE SpA. All right reserved.

8.2.2.9 LHP TRD BRACKETS

The worst condition is for **ELEMENT 112343** for **Load Case 29** at **Layer Z2.**
The resulting Von Mises stress is: **f_{VM} = 49.3 MPa.**
Following figure shows stress distribution for this subcase.

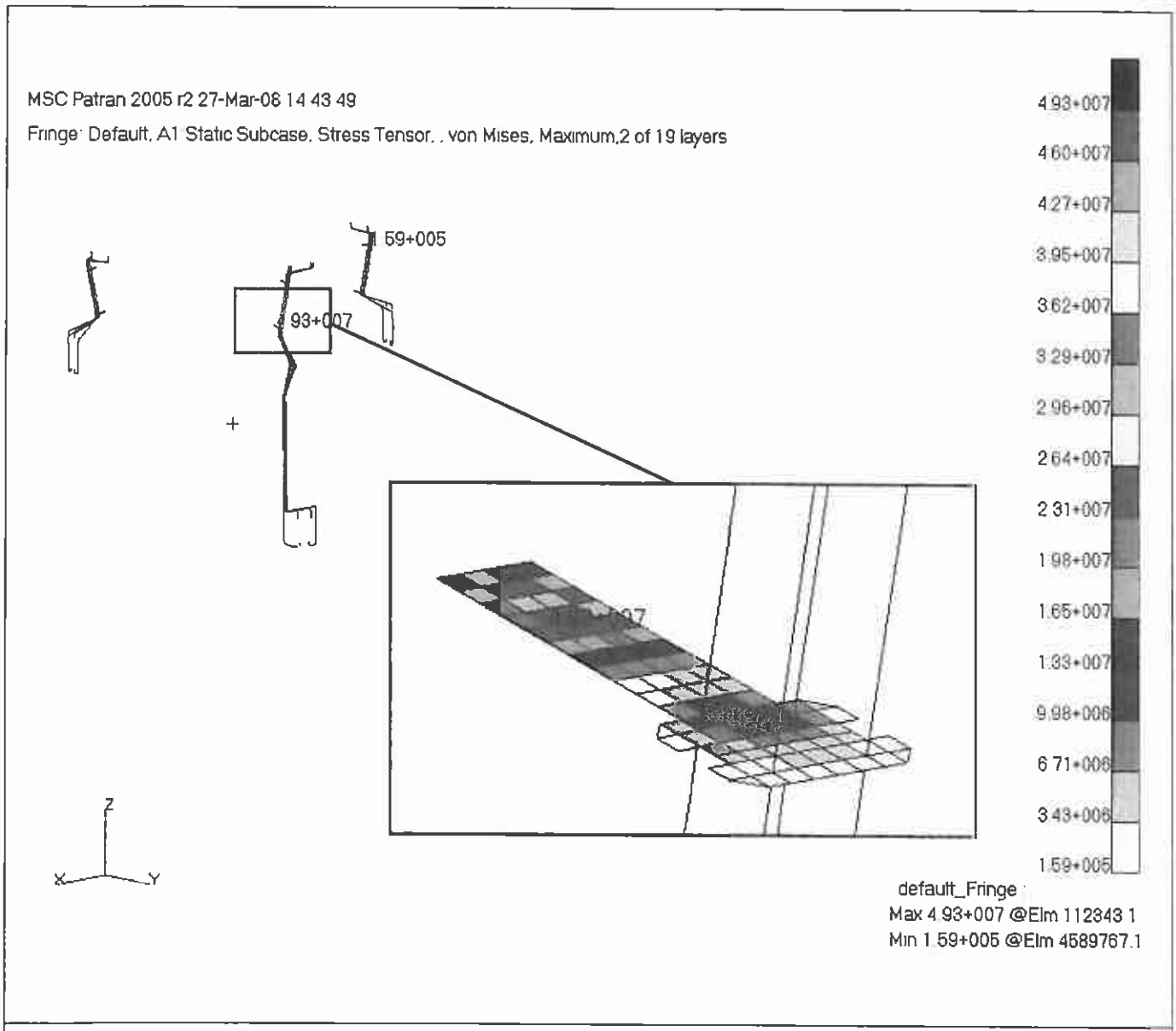

Figure 8-35: LHP TRD Brackets, Load Case 29, Layer Z2

The stress contour for the TRD brackets is introduced for the ones that connect the LHP line of the VSB1 structure. A stress on brackets for this line is more representative of real assembly due to the presence of the vertical support beam structure. The brackets of the opposite line are omitted.

Questo documento contiene informazioni di proprietà di CARLO GAVAZZI SPACE SpA. Tutti i diritti sono riservati.
All information contained in this document are property of CARLO GAVAZZI SPACE SpA. All right reserved.

8.2.2.10 VSB SUPPORT

The worst condition is for **ELEMENT 2082931** for **Load Case 10** at **Layer Z1**.
The resulting Von Mises stress is: **f_{VM} = 107 MPa**.

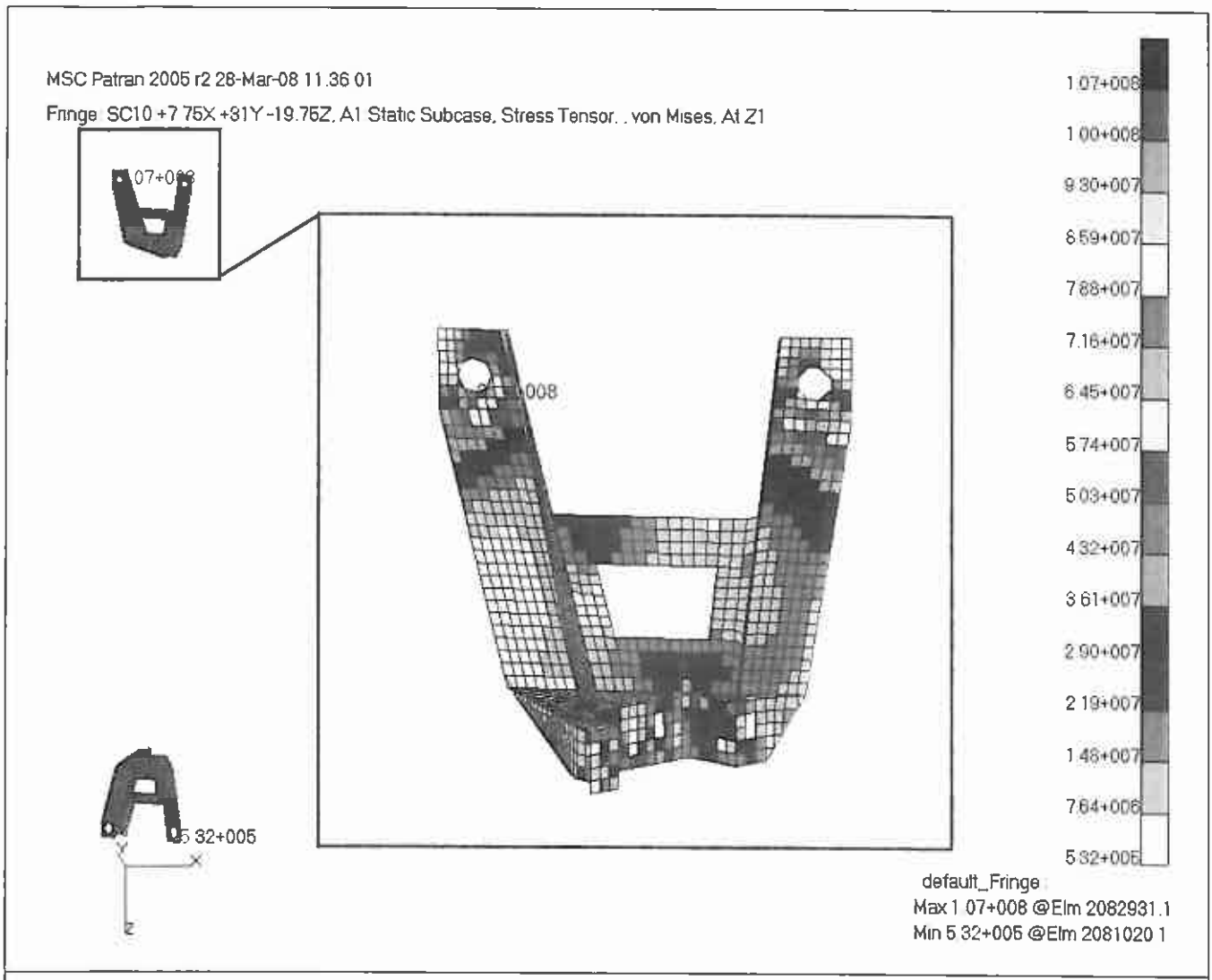

Figure 8-36: VSB Support, Load Case 10, Layer Z1

Peak stress due to elements near bolts is not considered and bearing analysis is performed in chapter 8.2.3.6 .

Questo documento contiene informazioni di proprietà di CARLO GAVAZZI SPACE SpA. Tutti i diritti sono riservati.
All information contained in this document are property of CARLO GAVAZZI SPACE SpA. All right reserved.

8.2.2.11 LHP VSB BRACKET

The worst condition for skin is on WAKE Radiator for **ELEMENT 2079546** for **Load Case 29** at **Layer Z1**.
The resulting Von Mises stress is: **f_{VM} = 64.9 MPa**.

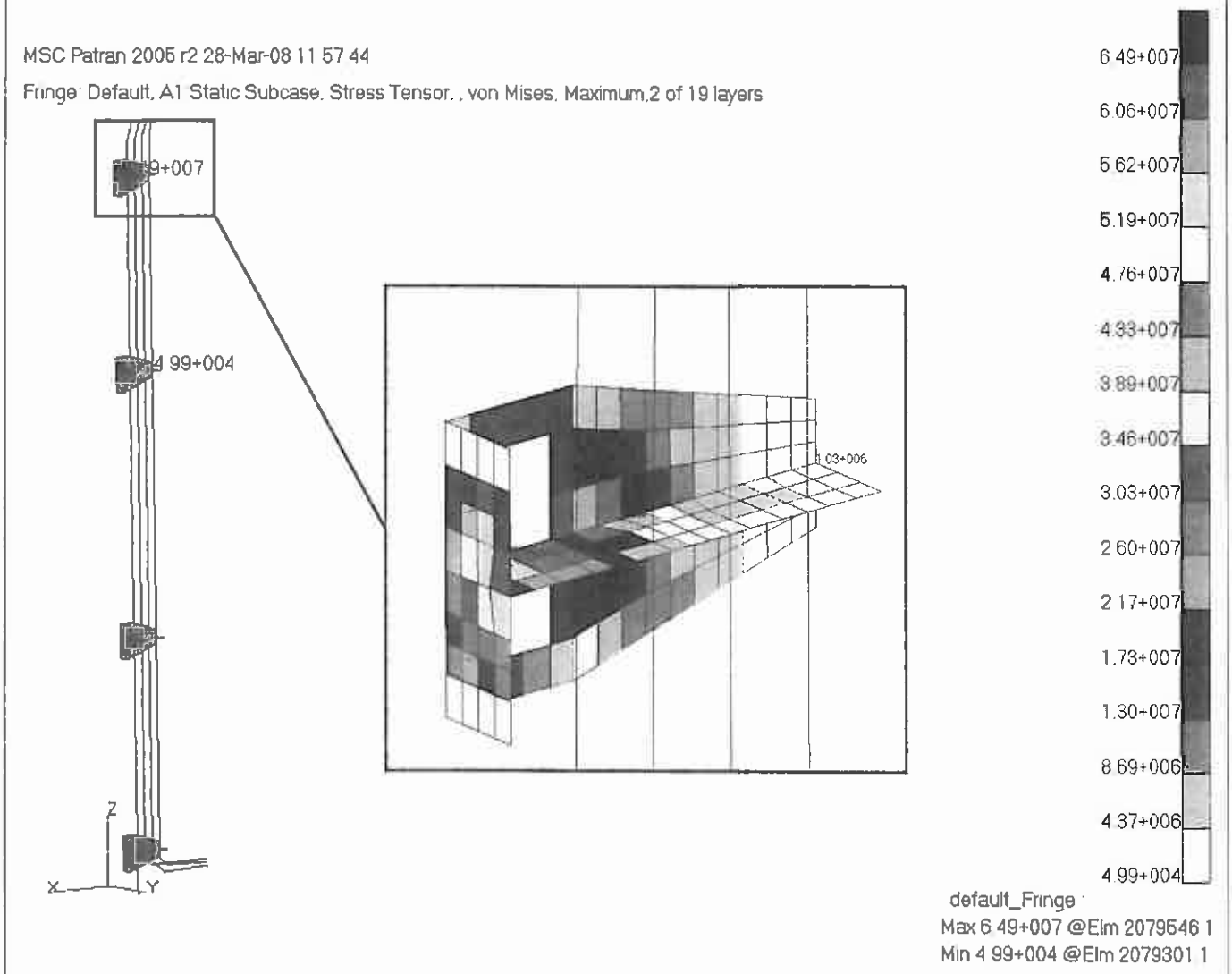

Figure 8-37: LHP VSB Bracket, Load Case 29, Layer 1

Peak stress due to elements near bolts is not considered and bearing analysis is performed in chapter 8.2.3.7 .

The peak of stress shown in Figure 8-37 seems unrealistically high. An alternative method (RD 13 sect 10.11) has been considered to evaluate the correct stress applied to the bracket.

Questo documento contiene informazioni di proprietà di CARLO GAVAZZI SPACE SpA. Tutti i diritti sono riservati.
All information contained in this document are property of CARLO GAVAZZI SPACE SpA. All right reserved.

The interface loads between the tube of the LHP and the flange of the bracket are obtained with the freebody Patran tool and shown in following figure.

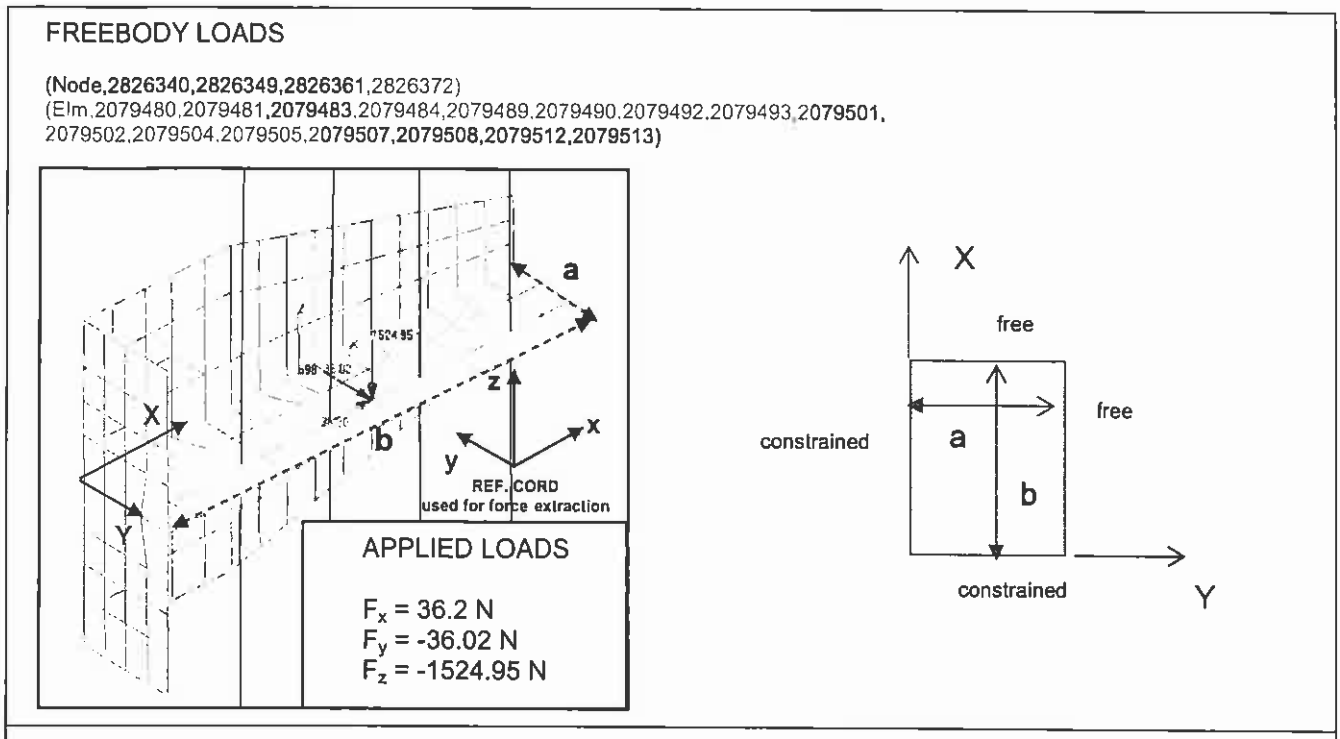

Figure 8-38: LHP VSB Bracket analysis

The geometric properties of the flange are reported in table below:

a [m]	b [m]	a/b	Thickness [m]	Area [m^2]
0.016	0.071	0.22	0.01	0.0011

Table 8-3: flange dimension

The flange is considered as a rectangular plate with two adjacent edges fixed and two remaining edges free. The resulting uniform load acting normal to the flange is calculated as:

$$q = F_z / A = 1.38 MPa$$

The maximum stress calculated on the flange (corresponding to location X = 0 and Y = a) is:

$$\sigma_{max} = \frac{-\beta q b^2}{t^2} = 16.03 MPa \xrightarrow[\text{SFu = 2}]{\text{Peek Ftu = 110 MPa}} \boxed{\textbf{MS = 2.43}}$$

Where β_1 is obtained from table here summarized (RD 13).

a/b	β
0.125	0.05
0.22	**0.23028**
0.25	0.353

Table 8-4: β factor

Questo documento contiene informazioni di proprietà di CARLO GAVAZZI SPACE SpA. Tutti i diritti sono riservati.
All information contained in this document are property of CARLO GAVAZZI SPACE SpA. All right reserved.

8.2.2.12 LHP VSB STAND-OFF

The worst condition is for **ELEMENT 2185891** for **Load Case 29** at **Layer Z2**.
The resulting Von Mises stress is: **f_{VM} = 33.4 MPa**.
Following figure shows stress distribution for this subcase.

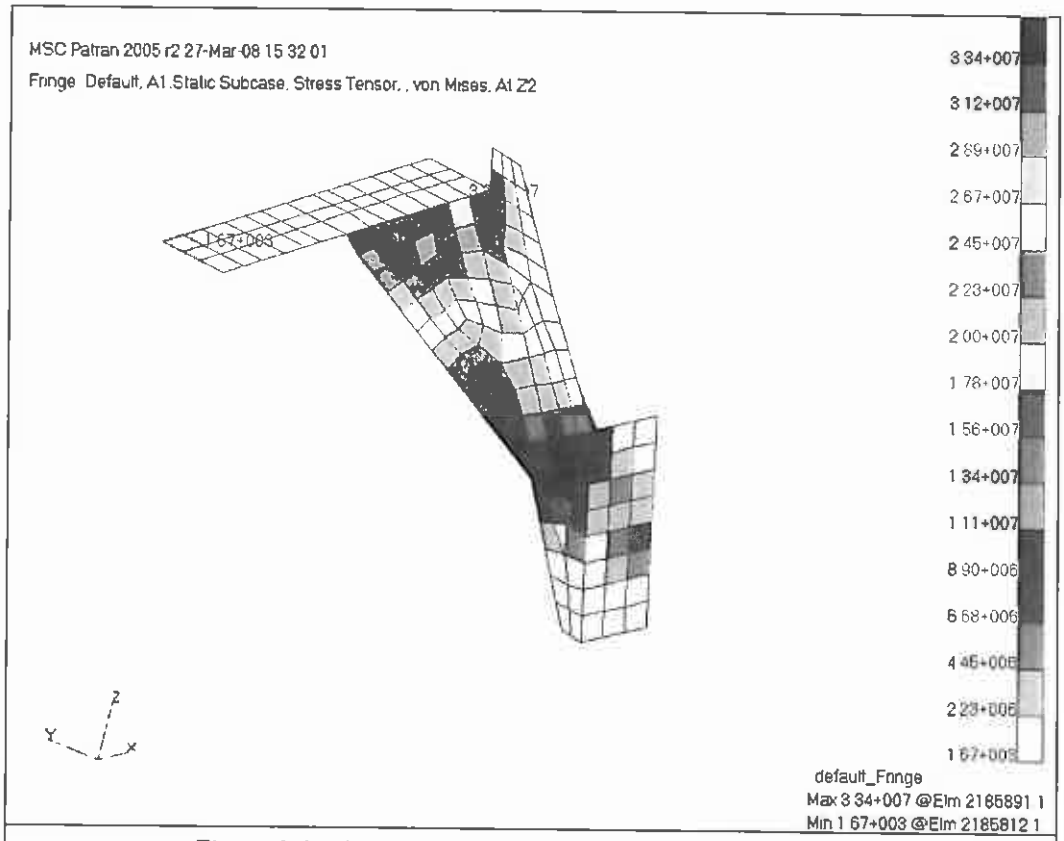

Figure 8-39: LHP VSB Stand-Off, Load Case 29, Layer Z2

Questo documento contiene informazioni di proprietà di CARLO GAVAZZI SPACE SpA. Tutti i diritti sono riservati.
All information contained in this document are property of CARLO GAVAZZI SPACE SpA. All right reserved.

8.2.2.13 LHP VSB3 UPPER BRACKET

The worst condition is for **ELEMENT 4608106** for **Load Case 29** at **Layer Z1**.
The resulting maximum Von Mises stress is: f_{VM} **= 18.5 MPa**.
Following figure shows stress distribution for this subcase.

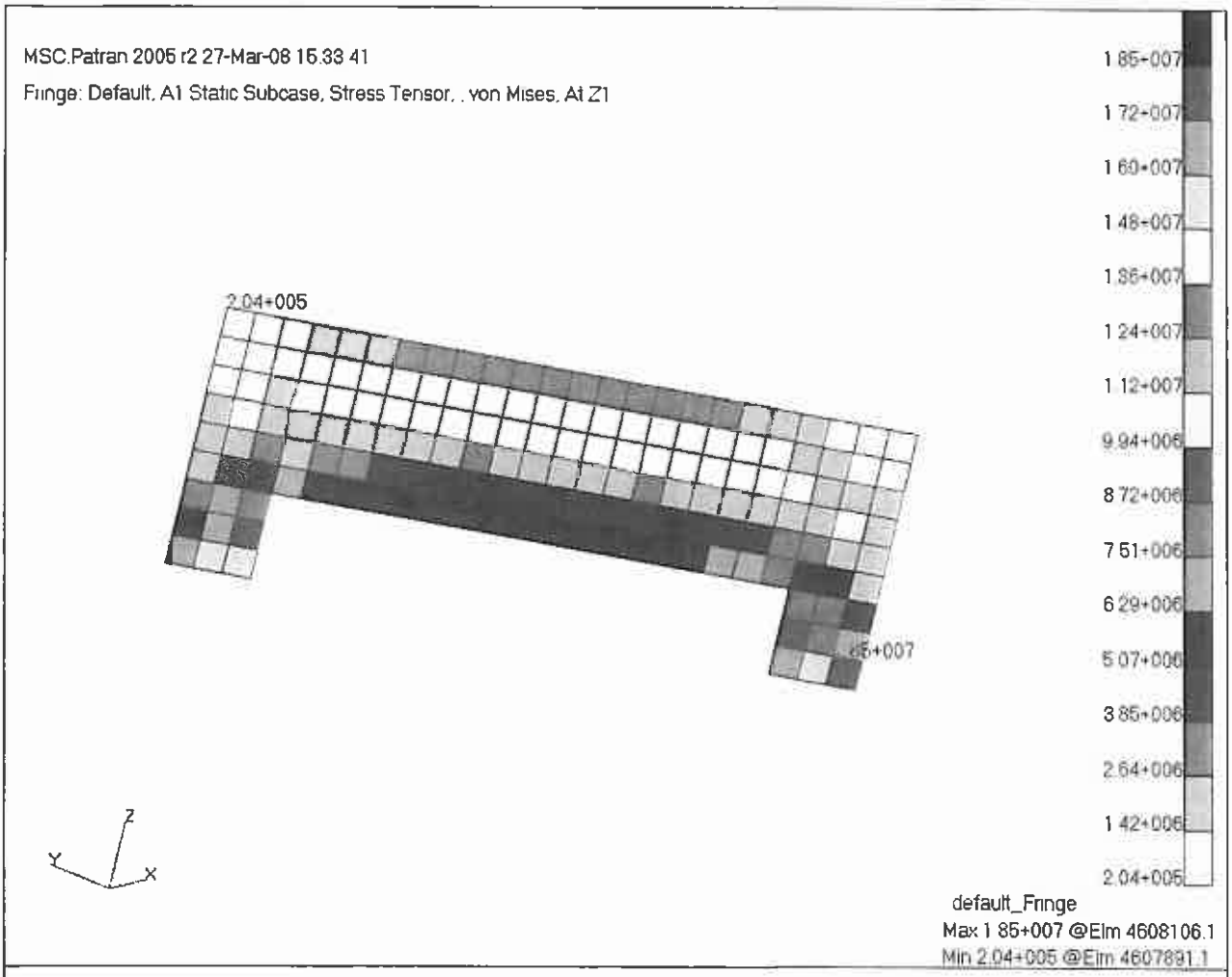

Figure 8-40: LHP VSB3 Upper Bracket, Load Case 29, Layer Z1

Questo documento contiene informazioni di proprietà di CARLO GAVAZZI SPACE SpA. Tutti i diritti sono riservati.
All information contained in this document are property of CARLO GAVAZZI SPACE SpA. All right reserved.

8.2.2.14 Z-BRACKET

The worst condition is for **ELEMENT 2065196** for **Load Case 1**.
The resulting failure index for is: **FI = 0.68**.
Following figure shows FI distribution for this subcase.

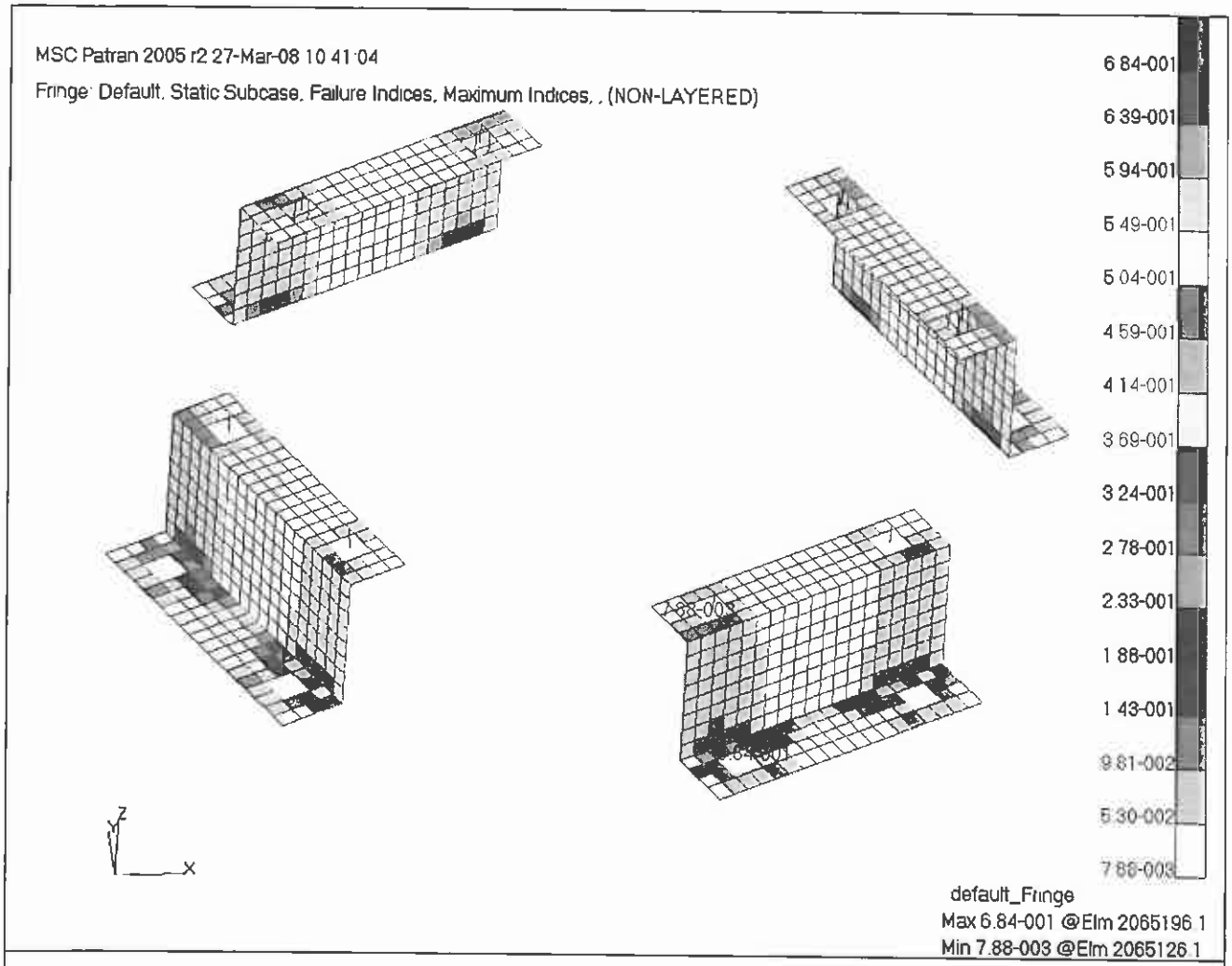

Figure 8-41: Z-Bracket, Load Case 1

Peak stress due to elements near bolts is not considered and bearing analysis is performed in chapter 8.2.3.1 .

Questo documento contiene informazioni di proprietà di CARLO GAVAZZI SPACE SpA. Tutti i diritti sono riservati.
All information contained in this document are property of CARLO GAVAZZI SPACE SpA. All right reserved.

8.2.2.15 VSB COVER

The worst condition is for **ELEMENT 2083354** for **Load Case 11**.
The resulting failure index for is: **FI = 0.40**.
Following figure shows FI distribution for this subcase.

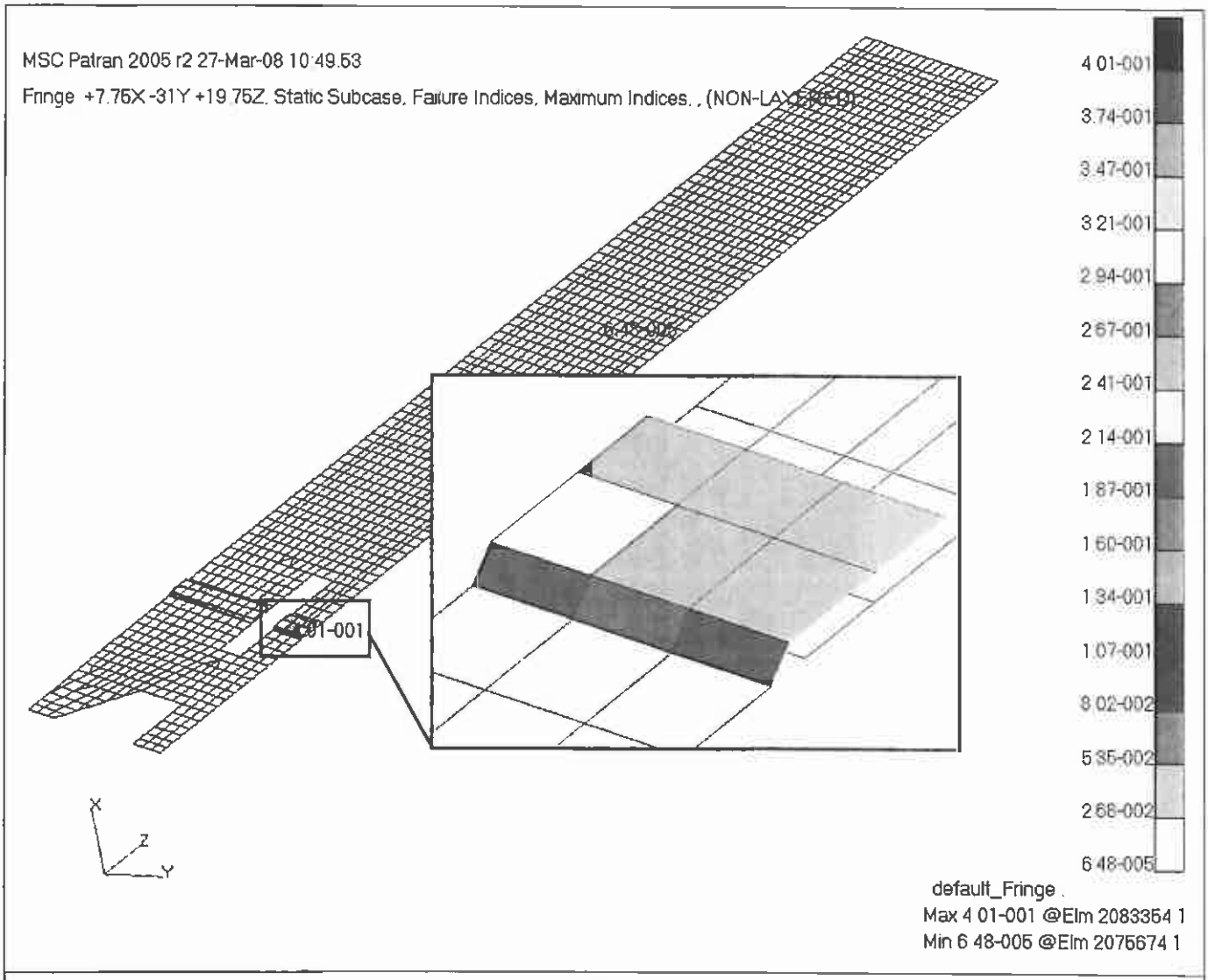

Figure 8-42: VSB Cover, Load Case 11

Questo documento contiene informazioni di proprietà di CARLO GAVAZZI SPACE SpA. Tutti i diritti sono riservati.
All information contained in this document are property of CARLO GAVAZZI SPACE SpA. All right reserved.

8.2.2.16 VSB BODY

The worst condition is for **ELEMENT 2083294** for **Load Case 29**.
The resulting failure index for is: **FI = 0.64**.
Following figure shows FI distribution for this subcase.

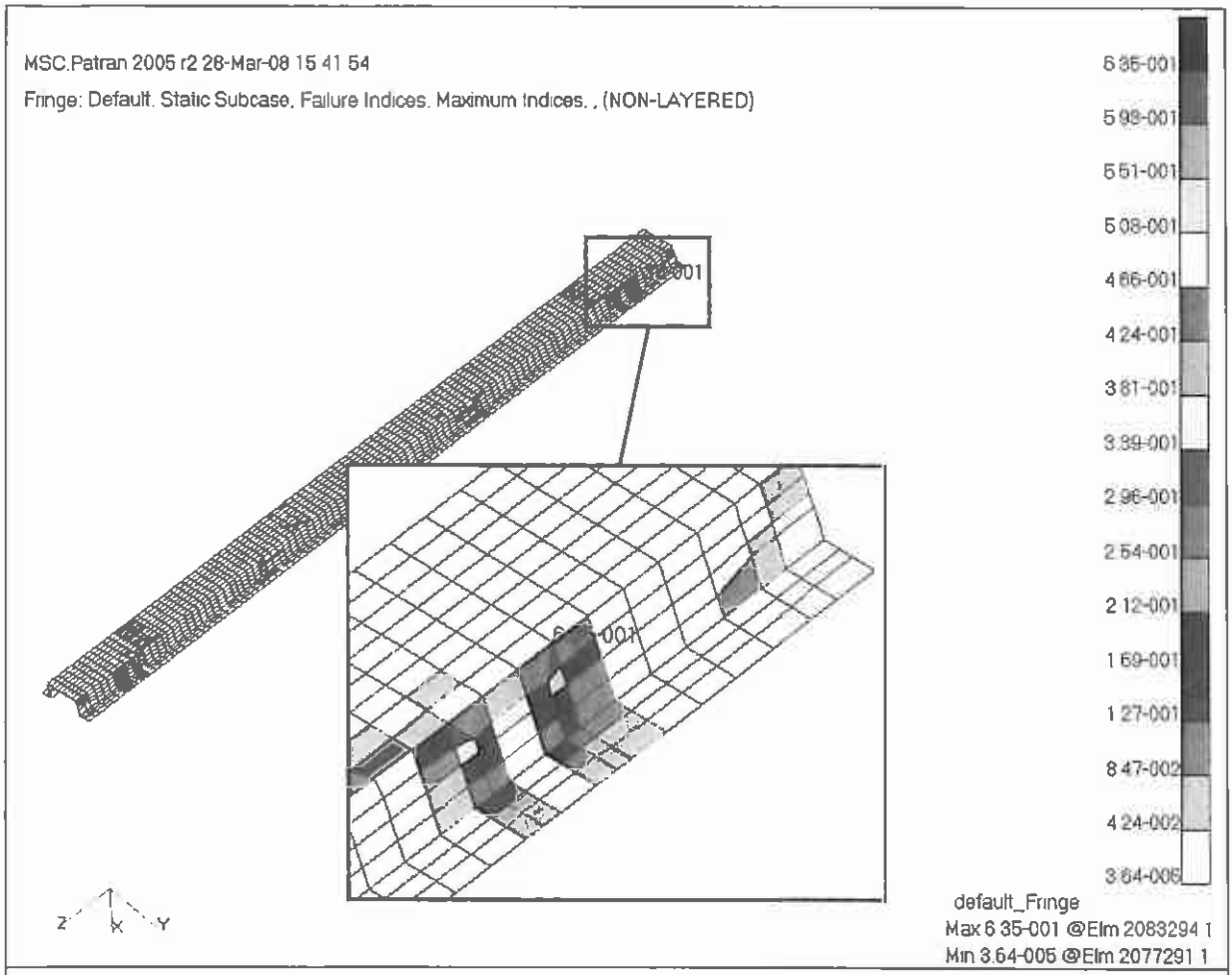

Figure 8-43: VSB Body, Load Case 29

Questo documento contiene informazioni di proprietà di CARLO GAVAZZI SPACE SpA. Tutti i diritti sono riservati.
All information contained in this document are property of CARLO GAVAZZI SPACE SpA. All right reserved.

8.2.2.17 STRESS ANALYSIS MOS SUMMARY FOR NOMINAL CONFIGURATION

ITEM	DWG NUMBER	Material	Load Case	Layer	Elm ID	Stress Note	Stress on FEM [MPa]	Allowable Yield Stress [MPa]	Allowable Ultimate Stress [MPa]	S.F.y	S.F.u	M.S.y	M.S.u	Note	Ref. Page
Stiff brackets	40-AMS02TCS-210.01.03	Al 7075	29	Z2	222620	VM	215	393	468	1.25	2	0.46	0.09		76
Gps Antenna Support	40-AMS02TCS-200.00.01	Al 7075	29	Z1	231239	VM	190	393	468	1.25	2	0.65	0.23		77
Zenith Radiator Panel skin	40-AMS02TCS-220.01.01 40-AMS02TCS-220.01.03 40-AMS02TCS-220.01.06	Al 2024	29	Z2	4593473	VM	109	400	462	1.25	2	1.95	1.13		78
Zenith Radiator Panel core	40-AMS02TCS-220.01.02	Rohacell	25	-	1915634	Max Shear	0.40	-	0.8	1.25	2	-	0.01		79
LHP Condenser Line	40-AMS02TCS-220.01.04 40-AMS02TCS-220.01.05	Al 3103	29	-	147026	MC	37.4	35	95	1.25	2	-	1.54	Non-linear analysis has been performed for this item, see chp. 8.2.2.5.1	81
Spokes	40-AMS02TCS-240.00.00	GFRP	29	-	4587469	MC	328	-	800	-	2	-	0.22		85
Bimetallic Support Brackets	40-AMS02TCS-220.01.12	Peek	29	Z1	311061	VM	38.8	-	110	-	2	-	0.42		86
LHP Transport Line		AISI 316L	NA	NA	NA	NA	NA	303	557	1.25	2	NA	NA	The verification has been successfully performed by test, see RD 17	87
LHP TRD Brackets		Peek	29	Z2	112343	VM	49.3	-	110	-	2	-	0.12		89

Table 8-5: Parts MoS summary (1 of 2)

Questo documento contiene informazioni di proprietà di CARLO GAVAZZI SPACE SpA. Tutti i diritti sono riservati.
All information contained in this document are property of CARLO GAVAZZI SPACE SpA. All right reserved.

ITEM	DWG NUMBER	Material	Load Case	Layer	Elm ID	Stress Note	Stress on FEM [MPa]	Allowable Yield Stress [MPa]	Allowable Ultimate Stress [MPa]	S.F.y	S.F.u	M.S.y	M.S.u	Note	Ref. Page
VSB Support	40-AMS02TCS-281.00.02 40-AMS02TCS-281.00.03	Al 7075	10	Z1	2082931	VM	107	393	468	1.25	2	1.93	1.18		90
LHP VSB Brackels	40-AMS02TCS-281.00.12 40-AMS02TCS-281.00.13 40-AMS02TCS-281.00.14 40-AMS02TCS-283.00.04 40-AMS02TCS-283.00.05 40-AMS02TCS-283.00.06	Peek	29	NA	NA	NA	16	-	110	-	2	-	>2	Dedicated analysis has been performed.	91
LHP VSB Stand-Off	40-AMS02TCS-281.00.18	Peek	29	Z2	2185891	VM	33.4	-	110	-	2	-	0.65		93
LHP VSB3 Upper Bracket		Peek	29	Z1	4608106	VM	18.5	-	110	-	2	-	1.97		94

ITEM	DWG NUMBER	Material	LC	Elm ID	S.F.u	FI TSAI-WU	Ref. Page
Z-Brackels	40-AMS02TCS-250.00.00 40-AMS02TCS-250.00.00	GFRP	1	2065196	2	0.68	95
Vsb Cover	40-AMS02TCS-281.00.07	CFRP	11	2083354	2	0.40	96
Vsb Body	40-AMS02TCS-281.00.01	CFRP	29	2083294	2	0.64	97

Table 8-6: Parts MoS summary (2 of 2)

Questo documento contiene informazioni di proprietà di CARLO GAVAZZI SPACE SpA. Tutti i diritti sono riservati.
All information contained in this document are property of CARLO GAVAZZI SPACE SpA. All right reserved.

8.2.3 JOINT ANALYSIS FOR NOMINAL CONFIGURATION

The analysis of the joints shall be divided in different kinds of connections:

JOINT	DESCRIPTION	MATERIAL	BOLT TYPE	TORQUE RANGE [Nm]	TORQUE RANGE [lbf In]	ANALYSIS PAGE
Joint 1a	Z-BRACKET/ RADIATOR	A286 – 160 ksi	NAS1351N3	4.0 - 4.5	35.0 - 40.0	103
Joint 1b	Z-BRACKET/TRD	A286 – 160 ksi	NAS1351C4LE12	3.8 - 4.5	34.0 - 40.0	103
Joint 2a	STIFF BKT/RADIATOR	A286 – 160 ksi	NAS1351N4-16	9.0 - 10.7	80.0 - 95.0	108
Joint 2b	STIFF BKT/TRD	A286 – 160 ksi	NAS1351N4LE12	8.8 - 10.7	78.0 - 95.0	108
Joint 3a	SPOKES/RADIATOR	Ti 6Al 4V 150 ksi	SPOKES UPPER ROD END 0.19"-32	4.7 - 5.1	42.0 - 45.0	114
Joint 3b	SPOKES/TRD	Ti 6Al 4V 150 ksi	SPOKES LOWER ROD END 0.25"-28 x 1.0" L	10.8 - 10.8	96.0 - 96.0	114
Joint 4	GPS ANTENNA SUPPORT/TRD	A286 – 160 ksi	NAS1351N4LE12	8.7 - 10.7	77.0 - 95.0	118
Joint 5	GPS ANTENNA/GPS ANTENNA SUPPORT	A2-70	DIN 965 M3x16	0.4 - 0.5	3.6 - 4.0	122
Joint 6	VSB - VACUUM CASE	A286 – 80 ksi	NAS1351 C6-20	14.0 – 17.0	125.0 - 150.0	125
Joint 7	VSB BODY / LHP VSB BKT	A286 – 80 ksi	NAS1351C08-6	1.1 - 1.5	10.0 - 13.0	128
Joint 8	VSB SUPPORTS/ LHP VSB STAND-OFF	A2-70	DIN 912 M5x12	1.9 - 2.3	17.0 - 20.0	131
Joint 9	VSB BODY/VSB COVER	A286 – 80 ksi	NAS1351C3-8	2.0 - 2.1	18.0 - 19.0	134
Joint 10	BIMETALLIC SUPPORT BKT/RADIATOR	A286 – 160 ksi	NAS1351N3LE12	4.0 - 4.5	35.0 - 40.0	137
Joint 11	VSB SUPPORTS/VSB BODY	A286	CR3522-5-05	N.A.	N.A.	140

Table 8-7: Verified joint for nominal configuration

Questo documento contiene informazioni di proprietà di CARLO GAVAZZI SPACE SpA. Tutti i diritti sono riservati.
All information contained in this document are property of CARLO GAVAZZI SPACE SpA. All right reserved.

Also Fail Safe analysis of bolts has been performed for the following joints:

- **Joint 1a** Z-BRACKET/ RADIATOR
- **Joint 1b** Z-BRACKET/TRD
- **Joint 2a** STIFF BKT/RADIATOR
- **Joint 2b** STIFF BKT/TRD JOINT
- **Joint 4** GPS ANTENNA SUPPORT/TRD
- **Joint 5** GPS ANTENNA/GPS ANTENNA SUPPORT
- **Joint 6** VSB - VACUUM CASE
- **Joint 7** VSB BODY / LHP VSB BKT
- **Joint 8** VSB SUPPORTS/ LHP VSB STAND-OFF
- **Joint 9** VSB BODY/VSB COVER
- **Joint 10** BIMETALLIC SUPPORT BKT/RADIATOR
- **Joint 11** VSB SUPPORTS/VSB BODY

Presented results are the worst case scenario on CRYO TCS Zenith radiators and VSB.

Summary of joint analysis results for nominal configuration are shown in paragraph 8.2.3.12 .
Summary of joint analysis results for Fail Safe configuration are shown in paragraph 9.2.4.12 .

For the bolt analysis, the MATHCAD template files "bolts_inserts_RevC.mcd" and "bolts_nuts_RevC.mcd"b are used. The joint 01A and 06 analyses are shown in ANNEX 1 for example.
Since these files consider only one bolt load condition at a time, it has not been possible to perform the analyses for each bolt and for each load condition.
Hence, the following procedure has been considered, both for the nominal configuration and for the fail safe ones:

A. analysis with the max axial tension (positive) load
B. analysis with the max shear load
C. analysis with the max combined load, in accordance with the formula shown in RD 4, para D1.8 "Bolts in Combined Shear and Tension", page D1.3, formula D1.1.

For the rivet analysis the following MoS calculation has been performed:

$$MoS_U = \frac{F_u \cdot TDF}{SF_U \cdot FF \cdot F_{Max}} - 1.0$$

- F_U the ultimate strength of the rivet (force value according to RD12);
- TDF, Temperature Degradation Factor (according to bolt verification 0.94);
- SF_U the safety factor for ultimate strength;
- FF fitting factor;
- F_{Max} the Maximum Force acting on the rivet due to external loads.

Questo documento contiene informazioni di proprietà di CARLO GAVAZZI SPACE SpA. Tutti i diritti sono riservati.
All information contained in this document are property of CARLO GAVAZZI SPACE SpA. All right reserved.

The MoS definition for bolts analysis is reported in the next table.

MoS	DESCRIPTION
MS 1	Margin of Safety for separation
MS 2	Margin of Safety for direct tension ultimate
MS 3	Margin of Safety for direct tension yield
MS 4	Margin of Safety for total tension ultimate
MS 5	Margin of Safety for total tension yield
MS 6	Margin of Safety for direct thread shear ultimate
MS 7	Margin of Safety for total thread shear ultimate
MS 8	Margin of Safety for shear ultimate
MS 9	Margin of Safety for bending ultimate
MS 10	Margin of Safety for shear, tension and bending ultimate
MS 11	Margin of Safety for insert

Table 8-8: MoS definition for bolt analysis

For all bolts the following safety factors and temperatures have been used:

- Ultimate Safety Factor 2.0
- Yield Safety Factor 1.25
- Joint Fitting Factor 1.15
- Ultimate safety factor for tested inserts 1.5
- Ultimate Safety Factor in fail safe configuration 1.0
- Assembly temperature 68°F (20°C)
- Max temperature 122°F (50°)
- Minimum temperature 32°F (0.°C)

Moreover main and tracker radiator inserts have been verified.

Questo documento contiene informazioni di proprietà di CARLO GAVAZZI SPACE SpA. Tutti i diritti sono riservati.
All information contained in this document are property of CARLO GAVAZZI SPACE SpA. All right reserved.

8.2.3.1 JOINT 1: Z-BRACKET (NOMINAL CONF.)

Z Bracket joint1a and joint 1a are NAS 1351N3 bolts made of stainless steel A286-160 ksi
Z Bracket joint1a and joint 1b are NAS1351C4LE12 bolts made of stainless steel A286-160 ksi

Next images show the bolts location.

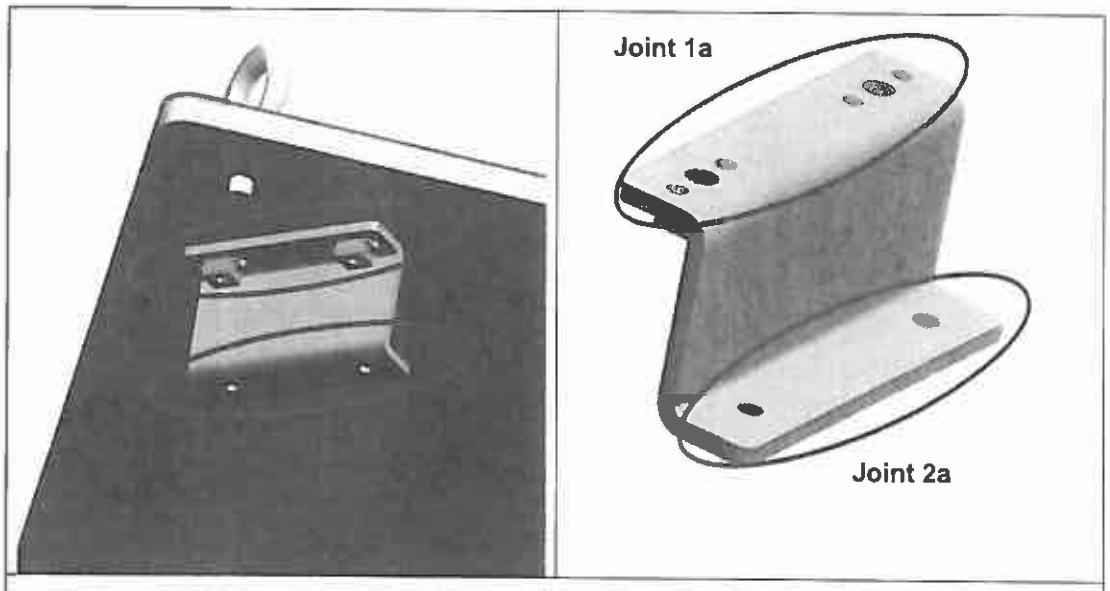

Figure 8-44: Joint 1a on Zenith Radiator

Questo documento contiene informazioni di proprietà di CARLO GAVAZZI SPACE SpA. Tutti i diritti sono riservati.
All information contained in this document are property of CARLO GAVAZZI SPACE SpA. All right reserved.

Next images show the forces on Joint 1a bolts (worst cases).

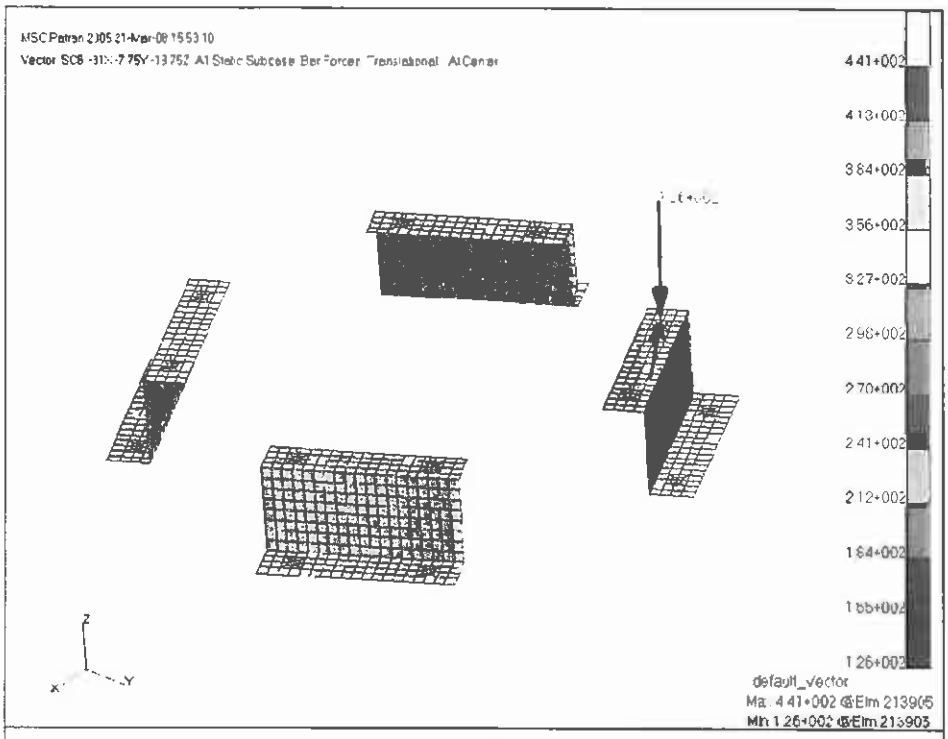

Figure 8-45: Forces on JOINT 1a Max Axial – Load case 08

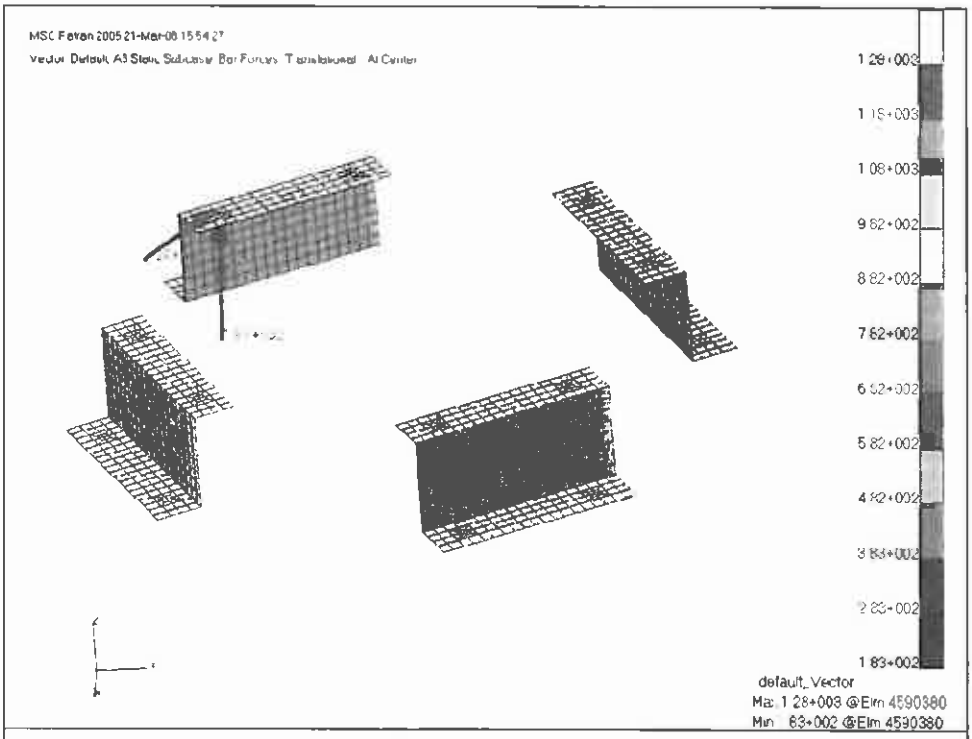

Figure 8-46: Forces on JOINT 1a – Max Shear and combined – Load case 29

In the following table input and output data are shown.

Questo documento contiene informazioni di proprietà di CARLO GAVAZZI SPACE SpA. Tutti i diritti sono riservati.
All information contained in this document are property of CARLO GAVAZZI SPACE SpA. All right reserved.

JUNCTION PROPERTIES	
BOLT	NAS1351N3-16
WASHER 1	NAS260C10L
WASHER 2	NA
NUT	MS21060L3
INSERT	NA
INSERT IN FLANGE	NA
NUMBER OF FLANGES	2
LUBRICATED	NO
FLANGE 1 NAME	Z BKT
FLANGE 1 MATERIAL	GFRP
FLANGE 1 MATERIAL SPEC	
FLANGE 1 THICKNESS [in]	0.157
FLANGE 1 HOLE DIAMETER [in]	0.195
FLANGE 2 NAME	RADIATOR I/F
FLANGE 2 MATERIAL	AL 7075 T7351
FLANGE 2 MATERIAL SPEC	
FLANGE 2 THICKNESS [in]	0.394
FLANGE 2 HOLE DIAMETER [in]	0.195
NOMINAL CONFIGURATION BOLT LOADS	
MAX AXIAL - CONFIGURATION ID	NOMINAL
MAX AXIAL - ELEMENT ID	213905
MAX AXIAL - LOAD CASE ID	8
MAX AXIAL - AXIAL LOAD [N]	126.5
max axial - axial load [lb]	28.4
MAX AXIAL - SHEAR LOAD [N]	441.4
max axial - shear load [lb]	99.2
MAX SHEAR - CONFIGURATION ID	NOMINAL
MAX SHEAR - ELEMENT ID	4590380
MAX SHEAR - LOAD CASE ID	29
MAX SHEAR - AXIAL LOAD [N]	182.8
max shear - axial load [lb]	41.1
MAX SHEAR - SHEAR LOAD [N]	1281.7
max shear - shear load [lb]	288.1
MAX COMBINED - CONFIGURATION ID	NOMINAL
MAX COMBINED - ELEMENT ID	SAME AS MAX SHEAR
MAX COMBINED - LOAD CASE ID	
MAX COMBINED - AXIAL LOAD [N]	
max combined - axial load [lb]	
MAX COMBINED - SHEAR LOAD [N]	
max combined - shear load [lb]	
WASHER DATA	
THICKNESS OF WASHER [in]	0.032
OUTER DIAMETER OF WASHER [in]	0.354
INNER DIAMETER OF WASHER [in]	0.195
BOLT HEAD DIAMETER [in]	0.43
FLANGE DATA	
THICK OF FLANGE 1 [in]	0.157
THICK OF FLANGE 2 [in]	0.394
DIAMETER OF HOLE [in]	0.195

BOLT MATERIAL PROPERTY DATA	
TEMP FACTOR FOR ULTIMATE STRENGHT	0.94
TEMP FACTOR FOR YIELD STRENGHT	0.94
ULTIMATE TENSILE ALLOWABLE STRESS [ksi]	160
YIELD TENSILE ALLOWABLE STRESS [ksi]	110
TEMP FACTOR FOR MODULUS	0.94
MODULUS OF ELASTICITY [ksi]	29100
THERMAL COEFF - HOT [1E(-6)/deg]	9.1
THERMAL COEFF - COLD [1E(-6)/deg]	7.8
INSERT MATERIAL PROPERTY DATA	
TEMP FACTOR FOR ULTIMATE STRENGHT	NA
ULTIMATE TENSILE ALLOWABLE STRESS [ksi]	NA
NUT MATERIAL PROPERTY DATA	
TEMP FACTOR FOR ULTIMATE STRENGHT	0.94
TENSILE ULTIMATE ALLOWABLE STRESS [psi]	160000
ULTIMATE AXIAL LOAD [lb]	6400
WASHER MATERIAL PROPERTY DATA	
TEMP FACTOR FOR MODULUS	1
MODULUS OF ELASTICITY [ksi]	29100
FLANGE MATERIAL PROPERTY DATA	
TEMP FACTOR FOR MODULUS OF FLANGE 1	1
TEMP FACTOR FOR MODULUS OF FLANGE 2	1
TEMP FACTOR FOR ULTIMATE STRENGHT OF FLANGE 2	0.94
ULTIMATE SHEAR ALLOWABLE STRESS OF FLANGE 2 [psi]	37999.89
MODULUS OF ELASTICITY FOR FLANGE 1 [ksi]	5500
MODULUS OF ELASTICITY FOR FLANGE 2 [ksi]	10500
THERMAL COEFF OF FLANGE 1 - HOT [1E(-6)/deg]	6
THERMAL COEFF OF FLANGE 1 - COLD [1E(-6)/deg]	6
THERMAL COEFF OF FLANGE 2 - HOT [1E(-6)/deg]	12.15
THERMAL COEFF OF FLANGE 2 - COLD [1E(-6)/deg]	11.15
ULTIMATE BEARING ALLOWABLE STRESS FOR FLANGE 1 [psi]	60000
YIELD BEARING ALLOWABLE STRESS FOR FLANGE 1 [psi]	NA
ULTIMATE BEARING ALLOWABLE STRESS FOR FLANGE 2 [psi]	102000
YIELD BEARING ALLOWABLE STRESS FOR FLANGE 2 [psi]	79000
TORQUE AND PRELOAD DATA	
MAX TORQUE [lb in]	40.0
max torque [N m]	4.5
MIN TORQUE [lb in]	35.0
min torque [N m]	4.0
COEFFICIENT OF UTILIZATION [%]	72.035
LADING PLANE FACTOR	0.5
PRELOAD UNCETRAINTY	0.25
TORQUE COEFFICIENT	0.15
NOMINAL CONFIGURATION SUMMARY OF MARGINS FOR BOLTS	
MOS CALCULATION - CONFIGURATION ID	NOMINAL
JOINT SEPARATION	2.30 (MAX SHEAR)
DIRECT TENSION ULTIMATE	29.63 (MAX SHEAR)
DIRECT TENSION YIELD	32.66 (MAX SHEAR)
TOTAL TENSION ULTIMATE	0.58 (MAX SHEAR)
TOTAL TENSION YIELD	0.37 (MAX AXIAL)
DIRECT THREAD SHEAR ULTIMATE	35.75 (MAX SHEAR)
TOTAL THREAD SHEAR ULTIMATE	1.32 (MAX SHEAR)
SHEAR ULTIMATE	1.35 (MAX SHEAR)
BENDING ULTIMATE	> 10
COMBINED SHEAR, TENSION AND BENDING ULTIMATE	0.63 (MAX SHEAR)
NOMINAL CONFIGURATION MINIMUM MOS	0.37
NOMINAL CONFIGURATION MINIMUM ULTIMATE MOS	0.63
NOMINAL CONFIGURATION SUMMARY OF MARGINS FOR BEARING FLANGES	
FLANGE 1 - BEARING ULTIMATE	2.05
FLANGE 1 - BEARING YIELD	NA
FLANGE 2 - BEARING ULTIMATE	10.82
FLANGE 2 - BEARING YIELD	13.65
NOMINAL CONFIGURATION MINIMUM MOS	FLANGE 1 - BEARING ULTIMATE

Table 8-9: JOINT 1a – nominal configuration

Questo documento contiene informazioni di proprietà di CARLO GAVAZZI SPACE SpA. Tutti i diritti sono riservati.
All information contained in this document are property of CARLO GAVAZZI SPACE SpA. All right reserved.

Next images show the forces on Joint 1b bolts (worst cases).

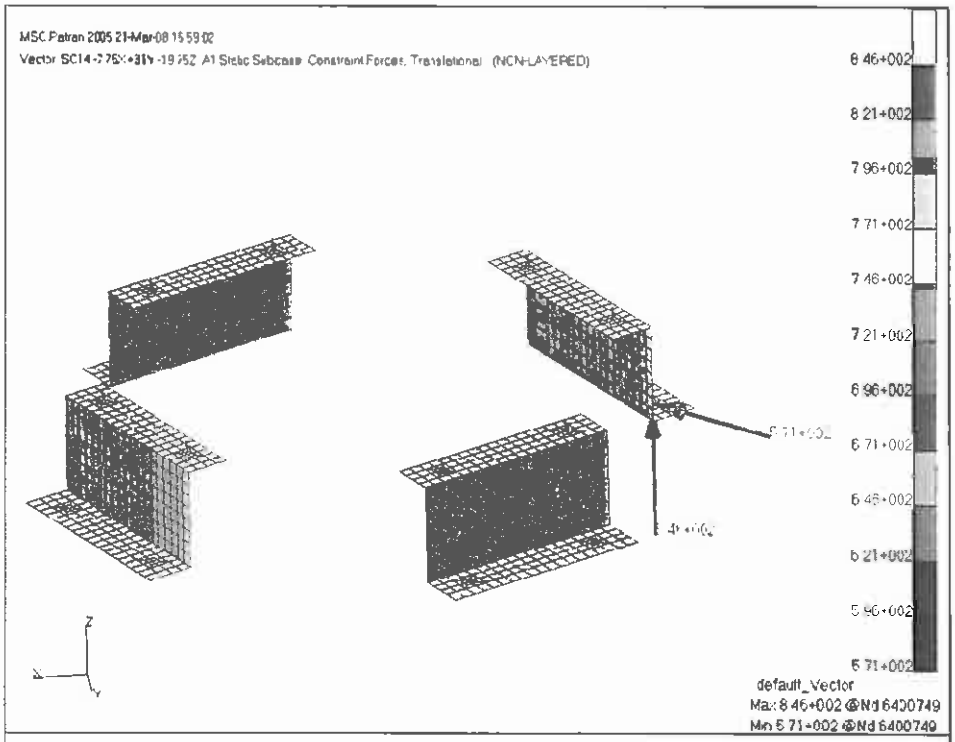

Figure 8-47: Forces on JOINT 1b – Max Axial and combined – Load case 14

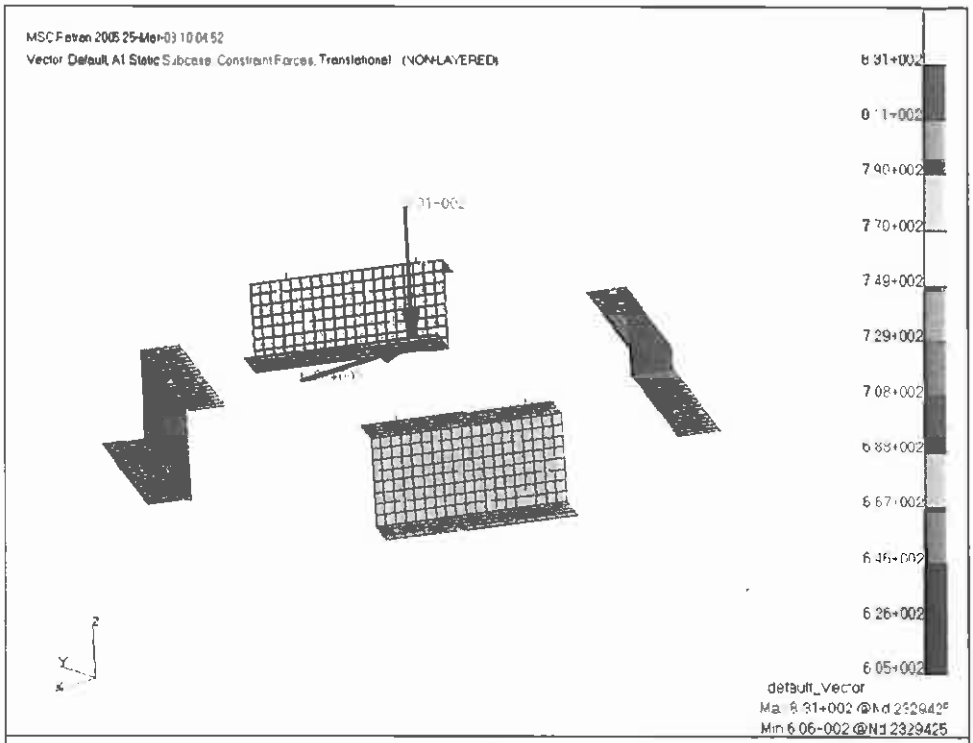

Figure 8-48: Forces on JOINT 1b – Max Shear – Load case 01

In the following table input and output data are shown.

Questo documento contiene informazioni di proprietà di CARLO GAVAZZI SPACE SpA. Tutti i diritti sono riservati.
All information contained in this document are property of CARLO GAVAZZI SPACE SpA. All right reserved.

JUNCTION PROPERTIES	
BOLT	NAS1351N3LE10
WASHER 1	NAS620C10L
WASHER 2	NA
NUT	NA
INSERT	MS21209 F4-15L
INSERT IN FLANGE	2
NUMBER OF FLANGES	2
LUBRICATED	NO
FLANGE 1 NAME	Z BKT
FLANGE 1 MATERIAL	GFRP
FLANGE 1 MATERIAL SPEC	
FLANGE 1 THICKNESS [in]	0.157
FLANGE 1 HOLE DIAMETER [in]	0.21
FLANGE 2 NAME	TRD
FLANGE 2 MATERIAL	AL 7075 T7351
FLANGE 2 MATERIAL SPEC	
FLANGE 2 THICKNESS [in]	0.285
FLANGE 2 HOLE DIAMETER [in]	0.21
NOMINAL CONFIGURATION BOLT LOADS	
MAX AXIAL - CONFIGURATION ID	NOMINAL
MAX AXIAL - ELEMENT ID	8400749
MAX AXIAL - LOAD CASE ID	14
MAX AXIAL - AXIAL LOAD [N]	846.4
max axial - axial load [lb]	190.3
MAX AXIAL - SHEAR LOAD [N]	571.4
max axial - shear load [lb]	128 5
MAX SHEAR - CONFIGURATION ID	NOMINAL
MAX SHEAR - ELEMENT ID	2329425
MAX SHEAR - LOAD CASE ID	1
MAX SHEAR - AXIAL LOAD [N]	831.4
max shear - axial load [lb]	186.9
MAX SHEAR - SHEAR LOAD [N]	606 2
max shear - shear load [lb]	136.3
MAX COMBINED - CONFIGURATION ID	NOMINAL
MAX COMBINED - ELEMENT ID	SAME AS MAX AXIAL
MAX COMBINED - LOAD CASE ID	
MAX COMBINED - AXIAL LOAD [N]	
max combined - axial load [lb]	
MAX COMBINED - SHEAR LOAD [N]	
max combined - shear load [lb]	
WASHER DATA	
THICKNESS OF WASHER [in]	0.032
OUTER DIAMETER OF WASHER [in]	0.354
INNER DIAMETER OF WASHER [in]	0.195
BOLT HEAD DIAMETER [in]	0 31
FLANGE DATA	
THICK OF FLANGE 1 [in]	0 157
THICK OF FLANGE 2 [in]	0.285
DIAMETER OF HOLE [in]	0.21

BOLT MATERIAL PROPERTY DATA	
TEMP FACTOR FOR ULTIMATE STRENGHT	0 94
TEMP FACTOR FOR YIELD STRENGHT	0 94
ULTIMATE TENSILE ALLOWABLE STRESS [ksi]	160
YIELD TENSILE ALLOWABLE STRESS [ksi]	115
TEMP FACTOR FOR MODULUS	0 94
MODULUS OF ELASTICITY [ksi]	29100
THERMAL COEFF - HOT [1E(-6)/deg]	6 7
THERMAL COEFF - COLD [1E(-6)/deg]	6 5
INSERT MATERIAL PROPERTY DATA	
TEMP FACTOR FOR ULTIMATE STRENGHT	1
ULTIMATE TENSILE ALLOWABLE STRESS [ksi]	150
NUT MATERIAL PROPERTY DATA	
TEMP FACTOR FOR ULTIMATE STRENGHT	NA
TENSILE ULTIMATE ALLOWABLE STRESS [psi]	NA
ULTIMATE AXIAL LOAD [lb]	NA
WASHER MATERIAL PROPERTY DATA	
TEMP FACTOR FOR MODULUS	1
MODULUS OF ELASTICITY [ksi]	29100
FLANGE MATERIAL PROPERTY DATA	
TEMP FACTOR FOR MODULUS OF FLANGE 1	1
TEMP FACTOR FOR MODULUS OF FLANGE 2	1
TEMP FACTOR FOR ULTIMATE STRENGHT OF FLANGE 2	0 94
ULTIMATE SHEAR ALLOWABLE STRESS OF FLANGE 2 [psi]	37999 89
MODULUS OF ELASTICITY FOR FLANGE 1 [ksi]	5 90E+03
MODULUS OF ELASTICITY FOR FLANGE 2 [ksi]	1 05E+04
THERMAL COEFF OF FLANGE 1 - HOT [1E(-6)/deg]	6
THERMAL COEFF OF FLANGE 1 - COLD [1E(-6)/deg]	6
THERMAL COEFF OF FLANGE 2 - HOT [1E(-6)/deg]	12 15
THERMAL COEFF OF FLANGE 2 - COLD [1E(-6)/deg]	12 15
ULTIMATE BEARING ALLOWABLE STRESS FOR FLANGE 1 [psi]	66000
YIELD BEARING ALLOWABLE STRESS FOR FLANGE 1 [psi]	NA
ULTIMATE BEARING ALLOWABLE STRESS FOR FLANGE 2 [psi]	102000
YIELD BEARING ALLOWABLE STRESS FOR FLANGE 2 [psi]	79000
TORQUE AND PRELOAD DATA	
MAX TORQUE [lb in]	40 0
max torque [N m]	4 5
MIN TORQUE [lb in]	34 0
min torque [N m]	3 8
COEFFICIENT OF UTILIZATION [%]	73 006
LADING PLANE FACTOR	0 5
PRELOAD UNCETRAINTY	0 25
TORQUE COEFFICIENT	0 15
NOMINAL CONFIGURATION SUMMARY OF MARGINS FOR BOLTS	
MOS CALCULATION - CONFIGURATION ID	NOMINAL
JOINT SEPARATION	1 28 (MAX AXIAL)
DIRECT TENSION ULTIMATE	5 81 (MAX AXIAL)
DIRECT TENSION YIELD	6 28 (MAX AXIAL)
TOTAL TENSION ULTIMATE	0 89 (MAX AXIAL)
TOTAL TENSION YIELD	0 324 (MAX AXIAL)
DIRECT THREAD SHEAR ULTIMATE	7 62 (MAX AXIAL)
TOTAL THREAD SHEAR ULTIMATE	1 46 (MAX AXIAL)
SHEAR ULTIMATE	4 05 (MAX SHEAR)
BENDING ULTIMATE	> 10
COMBINED SHEAR, TENSION AND BENDING ULTIMATE	0 642 (MAX SHEAR)
NOMINAL CONFIGURATION MINIMUM MOS	0 324
NOMINAL CONFIGURATION MINIMUM ULTIMATE MOS	0 642
NOMINAL CONFIGURATION SUMMARY OF MARGINS FOR BEARING FLANGES	
FLANGE 1 - BEARING ULTIMATE	5 94
FLANGE 1 - BEARING YIELD	NA
FLANGE 2 - BEARING ULTIMATE	18 48
FLANGE 2 - BEARING YIELD	23 14
NOMINAL CONFIGURATION MINIMUM MOS	FLANGE 1 - BEARING ULTIMATE

Table 8-10: JOINT 1b – nominal configuration

Questo documento contiene informazioni di proprietà di CARLO GAVAZZI SPACE SpA. Tutti i diritti sono riservati.
All information contained in this document are property of CARLO GAVAZZI SPACE SpA. All right reserved.

8.2.3.2 JOINT 2: STIFF BRACKET (NOMINAL CONF.)

Stiff bracket/Radiator Joint 2a are NAS1351N4-16 bolts made of stainless steel A286-160 ksi.
Stiff bracket /TRD Joint 2b are NAS1351N4LE12 bolts made of stainless steel A286-160 ksi.

Next images show the bolt locations.

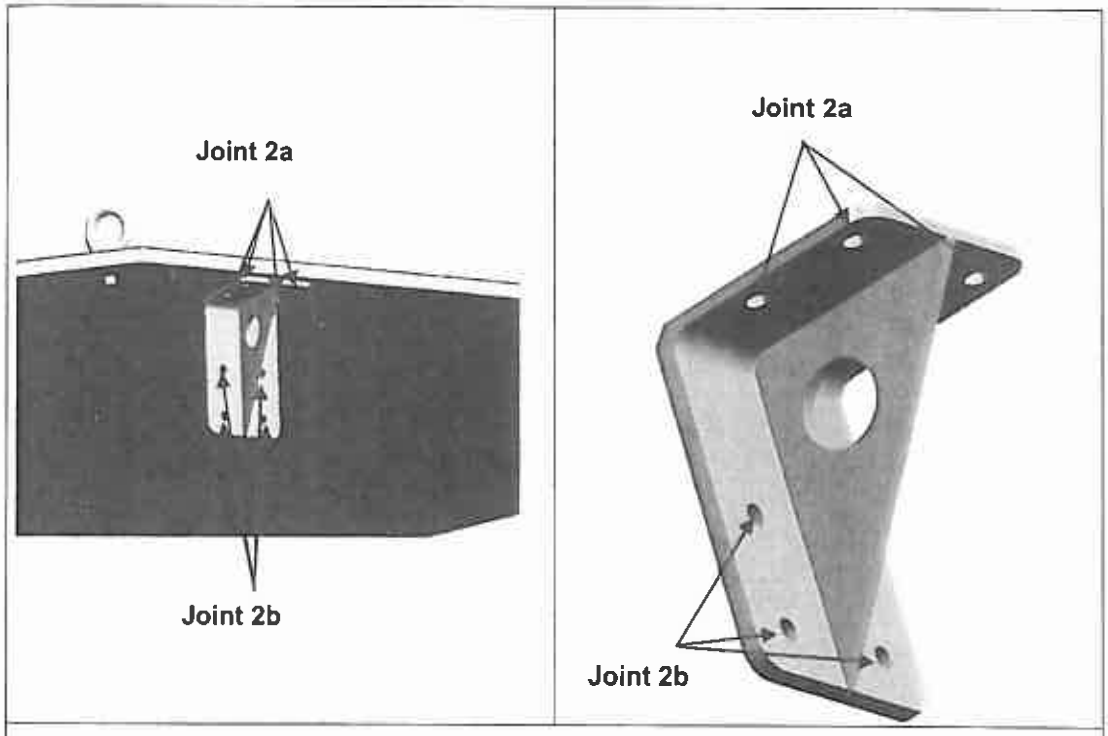

Figure 8-49: Joint 2a and Joint 2b

Questo documento contiene informazioni di proprietà di CARLO GAVAZZI SPACE SpA. Tutti i diritti sono riservati.
All information contained in this document are property of CARLO GAVAZZI SPACE SpA. All right reserved.

Next images show the forces on Joint 2a bolts (worst cases).

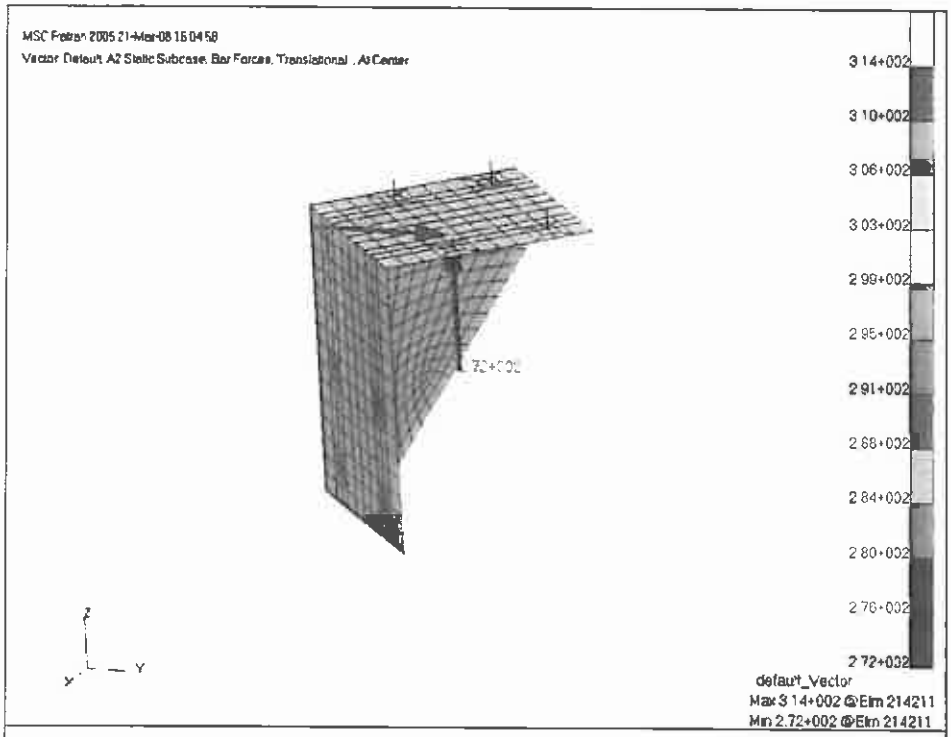

Figure 8-50: Forces on JOINT 2a – Max Axial – Load case 25

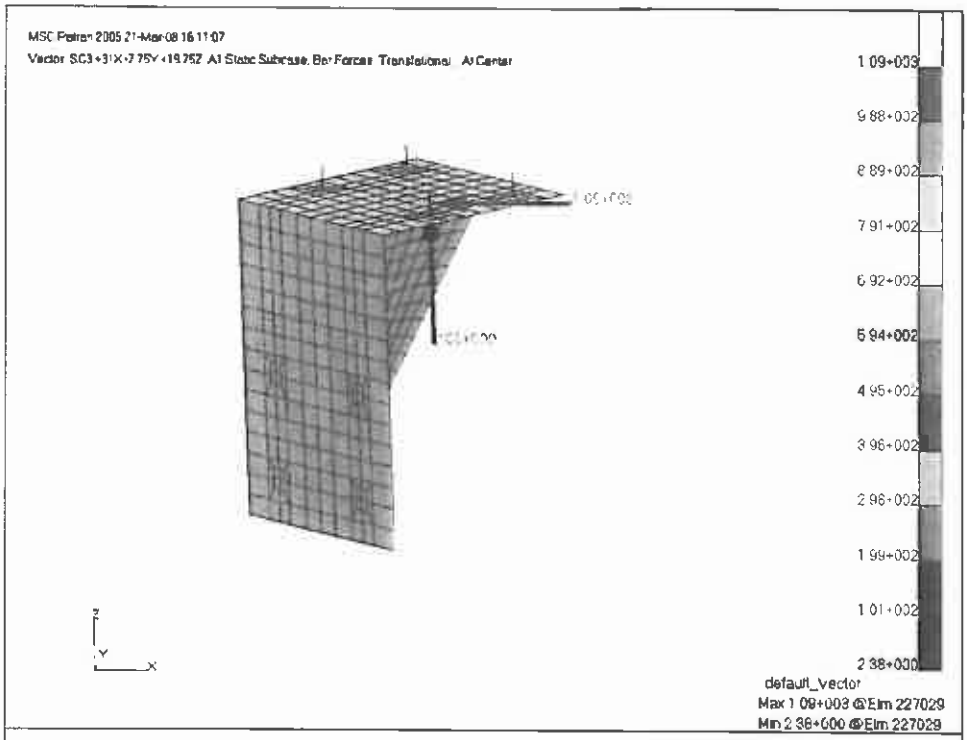

Figure 8-51: Forces on JOINT 2a– Max Shear and combined – Load case 03

In the following table input and output data are shown.

Questo documento contiene informazioni di proprietà di CARLO GAVAZZI SPACE SpA. Tutti i diritti sono riservati.
All information contained in this document are property of CARLO GAVAZZI SPACE SpA. All right reserved.

JUNCTION PROPERTIES	
BOLT	NAS1351N4-16
WASHER 1	NAS620C416
WASHER 2	NA
NUT	NAS1291C4M
INSERT	NA
INSERT IN FLANGE	NA
NUMBER OF FLANGES	2
LUBRICATED	NO
FLANGE 1 NAME	STIFF BKT
FLANGE 1 MATERIAL	AL 7075 T7351
FLANGE 1 MATERIAL SPEC	
FLANGE 1 THICKNESS [in]	0.157
FLANGE 1 HOLE DIAMETER [in]	0.25
FLANGE 2 NAME	RADIATOR I/F
FLANGE 2 MATERIAL	AL 7075 T7351
FLANGE 2 MATERIAL SPEC	
FLANGE 2 THICKNESS [in]	0.394
FLANGE 2 HOLE DIAMETER [in]	0.25
NOMINAL CONFIGURATION BOLT LOADS	
MAX AXIAL - CONFIGURATION ID	NOMINAL
MAX AXIAL - ELEMENT ID	214211
MAX AXIAL - LOAD CASE ID	25
MAX AXIAL - AXIAL LOAD [N]	272.4
max axial - axial load [lb]	61.2
MAX AXIAL - SHEAR LOAD [N]	314.0
max axial - shear load [lb]	70.6
MAX SHEAR - CONFIGURATION ID	NOMINAL
MAX SHEAR - ELEMENT ID	227029
MAX SHEAR - LOAD CASE ID	3
MAX SHEAR - AXIAL LOAD [N]	2.4
max shear - axial load [lb]	0.5
MAX SHEAR - SHEAR LOAD [N]	1086.2
max shear - shear load [lb]	244.2
MAX COMBINED - CONFIGURATION ID	NOMINAL
MAX COMBINED - ELEMENT ID	SAME AS MAX SHEAR
MAX COMBINED - LOAD CASE ID	
MAX COMBINED - AXIAL LOAD [N]	
max combined - axial load [lb]	
MAX COMBINED - SHEAR LOAD [N]	
max combined - shear load [lb]	
WASHER DATA	
THICKNESS OF WASHER [in]	0.063
OUTER DIAMETER OF WASHER [in]	0.468
INNER DIAMETER OF WASHER [in]	0.255
BOLT HEAD DIAMETER [in]	0.37
FLANGE DATA	
THICK OF FLANGE 1 [in]	0.157
THICK OF FLANGE 2 [in]	0.394
DIAMETER OF HOLE [in]	0.25

BOLT MATERIAL PROPERTY DATA	
TEMP FACTOR FOR ULTIMATE STRENGHT	0.94
TEMP FACTOR FOR YIELD STRENGHT	0.94
ULTIMATE TENSILE ALLOWABLE STRESS [ksi]	160
YIELD TENSILE ALLOWABLE STRESS [ksi]	110
TEMP FACTOR FOR MODULUS	0.94
MODULUS OF ELASTICITY [ksi]	29100
THERMAL COEFF - HOT [1E(-6)/deg]	6.1
THERMAL COEFF - COLD [1E(-6)/deg]	7.8
INSERT MATERIAL PROPERTY DATA	
TEMP FACTOR FOR ULTIMATE STRENGHT	NA
ULTIMATE TENSILE ALLOWABLE STRESS [ksi]	NA
NUT MATERIAL PROPERTY DATA	
TEMP FACTOR FOR ULTIMATE STRENGHT	0.94
TENSILE ULTIMATE ALLOWABLE STRESS [psi]	125000
ULTIMATE AXIAL LOAD [lb]	8400
WASHER MATERIAL PROPERTY DATA	
TEMP FACTOR FOR MODULUS	1
MODULUS OF ELASTICITY [ksi]	29100
FLANGE MATERIAL PROPERTY DATA	
TEMP FACTOR FOR MODULUS OF FLANGE 1	1
TEMP FACTOR FOR MODULUS OF FLANGE 2	1
TEMP FACTOR FOR ULTIMATE STRENGHT OF FLANGE 2	0.94
ULTIMATE SHEAR ALLOWABLE STRESS OF FLANGE 2 [psi]	37999.89
MODULUS OF ELASTICITY FOR FLANGE 1 [ksi]	10500
MODULUS OF ELASTICITY FOR FLANGE 2 [ksi]	10500
THERMAL COEFF OF FLANGE 1 - HOT [1E(-6)/deg]	12.15
THERMAL COEFF OF FLANGE 1 - COLD [1E(-6)/deg]	11.5
THERMAL COEFF OF FLANGE 2 - HOT [1E(-6)/deg]	12.15
THERMAL COEFF OF FLANGE 2 - COLD [1E(-6)/deg]	11.5
ULTIMATE BEARING ALLOWABLE STRESS FOR FLANGE 1 [psi]	102000
YIELD BEARING ALLOWABLE STRESS FOR FLANGE 1 [psi]	79000
ULTIMATE BEARING ALLOWABLE STRESS FOR FLANGE 2 [psi]	102000
YIELD BEARING ALLOWABLE STRESS FOR FLANGE 2 [psi]	79000
TORQUE AND PRELOAD DATA	
MAX TORQUE [lb in]	95.0
max torque [N m]	10.7
MIN TORQUE [lb in]	80.0
min torque [N m]	9.0
COEFFICIENT OF UTILIZATION [%]	73.141
LADING PLANE FACTOR	0.5
PRELOAD UNCETRAINTY	0.35
TORQUE COEFFICIENT	0.2
NOMINAL CONFIGURATION SUMMARY OF MARGINS FOR BOLTS	
MOS CALCULATION - CONFIGURATION ID	NOMINAL
JOINT SEPARATION	10.35 (MAX AXIAL)
DIRECT TENSION ULTIMATE	36.64 (MAX AXIAL)
DIRECT TENSION YIELD	40.4 (MAX AXIAL)
TOTAL TENSION ULTIMATE	0.97 (MAX AXIAL)
TOTAL TENSION YIELD	0.36 (MAX AXIAL)
DIRECT THREAD SHEAR ULTIMATE	44.17 (MAX AXIAL)
TOTAL THREAD SHEAR ULTIMATE	1.37 (MAX AXIAL)
SHEAR ULTIMATE	4.23 (MAX SHEAR)
BENDING ULTIMATE	> 10
COMBINED SHEAR, TENSION AND BENDING ULTIMATE	0.94 (MAX SHEAR)
NOMINAL CONFIGURATION MINIMUM MOS	0.36
NOMINAL CONFIGURATION MINIMUM ULTIMATE MOS	0.94
NOMINAL CONFIGURATION SUMMARY OF MARGINS FOR BEARING FLANGES	
FLANGE 1 - BEARING ULTIMATE	8.13
FLANGE 1 - BEARING YIELD	7.83
FLANGE 2 - BEARING ULTIMATE	16.89
FLANGE 2 - BEARING YIELD	21.17
NOMINAL CONFIGURATION MINIMUM MOS	FLANGE 1 - BEARING ULTIMATE

Table 8-11: JOINT 2a – nominal configuration

Questo documento contiene informazioni di proprietà di CARLO GAVAZZI SPACE SpA. Tutti i diritti sono riservati.
All information contained in this document are property of CARLO GAVAZZI SPACE SpA. All right reserved.

For Joint 2b the forces foreseen for thermo elastic analysis are not realistic because the bracket is grounded by means of SPCs. That do not allow the bracket to contract. The FEM foreseen force is 30000 N and will not be considered; an alternate method has been considered to verify the bracket area where SPCs are present. Sliding of the junction is supposed when shear force on bolts is greater than sliding forces and arrangement of the structure occurs.

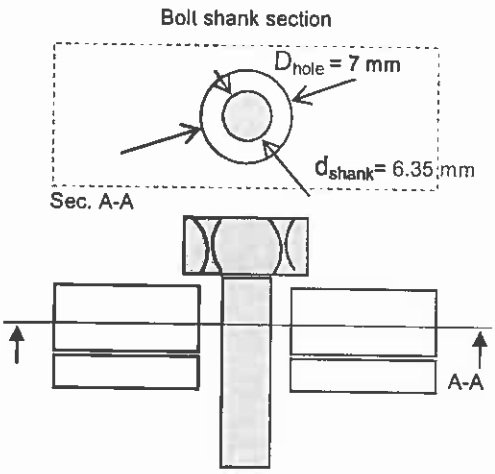

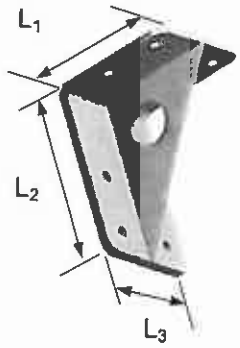

L_1 = 7.8 mm

L_2 = 10.5 mm

L_3 = 7.2 mm

Tolerance of the hole:

(D-d) / 2 = 0.325 mm

ΔT = 100° C
CTE = 21.7e-6
L_{max} = 10.5 mm

maximum induced thermal displacement:

ΔT CTE L_{max} = 0.228 mm < Hole tolerance

Table 8-12: JOINT 2b – tollerance for sliding

The max sliding force during sliding of the junction has been used to verify the bolts as a new load condition (called "SLIDING") instead of the forces resulting from the thermo elastic load case. The sliding force has been calculated using a friction coefficient (between aluminum and steel) of 0.61 and its value is 2900 N. Shear forces on bolt greater than this value produce the sliding of the junction so it is assumed as maximum shear force when sliding occurs.

The forces for the sliding load case considered are:
F_{AXIAL} = 0 N
F_{SHEAR} = 2900 N

Images in the following page show the force on Joint 2b bolts (worst cases excluding thermal loads).

Questo documento contiene informazioni di proprietà di CARLO GAVAZZI SPACE SpA. Tutti i diritti sono riservati.
All information contained in this document are property of CARLO GAVAZZI SPACE SpA. All right reserved.

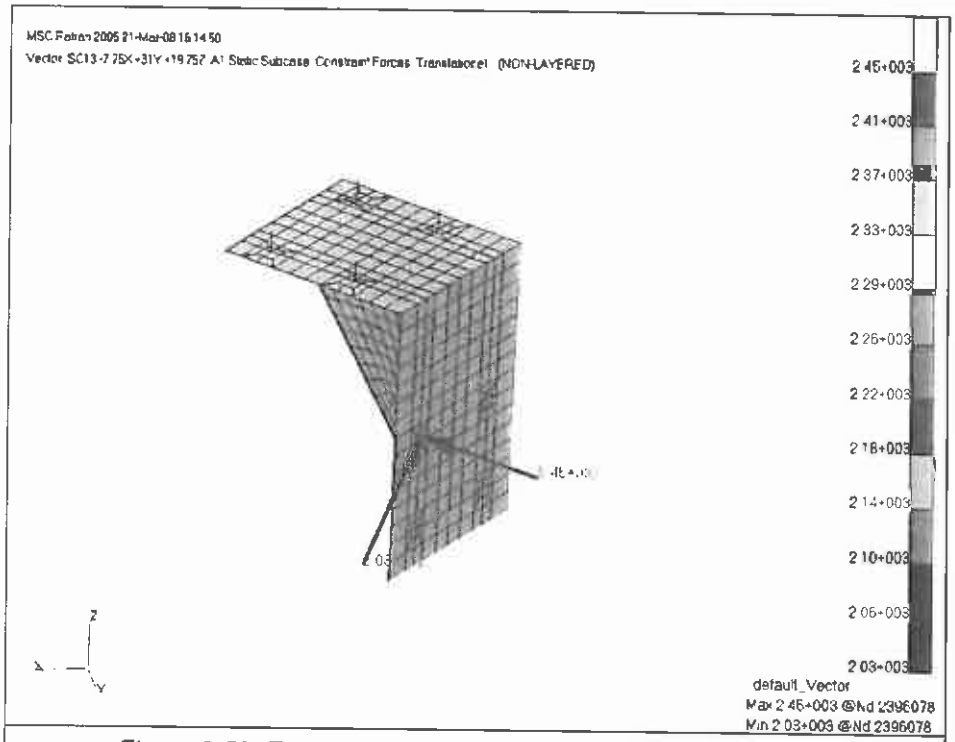

Figure 8-52: Forces on JOINT 2b – Max Axial – Load case 13

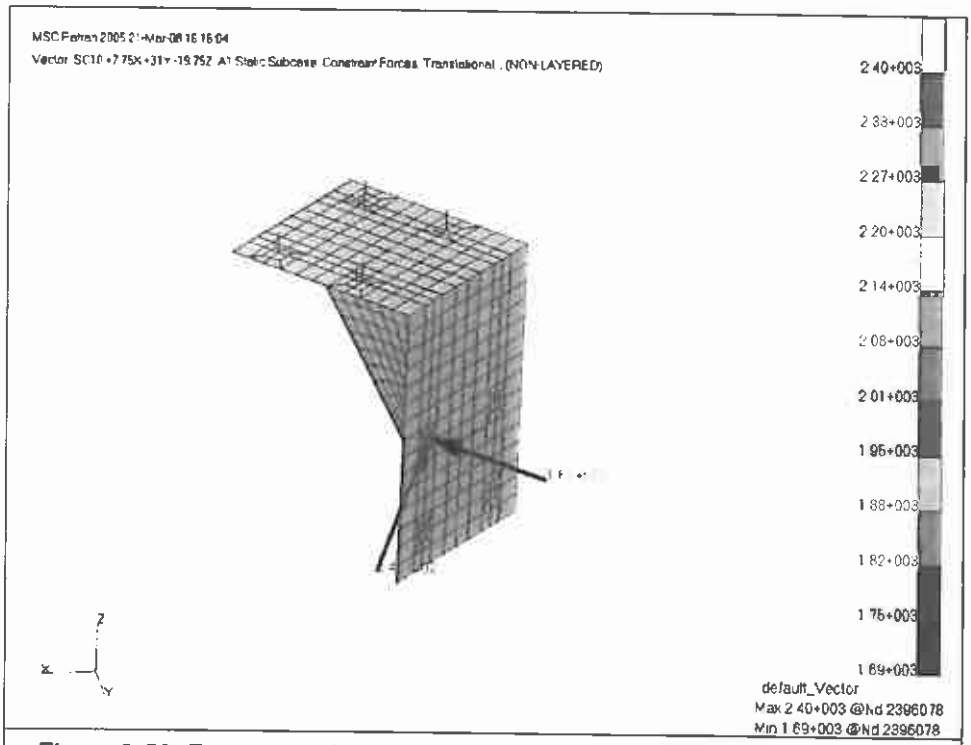

Figure 8-53: Forces on JOINT 2b– Max Shear and combined – Load case 10

In the following table input and output data are shown.

Questo documento contiene informazioni di proprietà di CARLO GAVAZZI SPACE SpA. Tutti i diritti sono riservati.
All information contained in this document are property of CARLO GAVAZZI SPACE SpA. All right reserved.

JUNCTION PROPERTIES	
BOLT	NAS1351N4LE12
WASHER 1	NAS620C416
WASHER 2	NA
NUT	NA
INSERT	MS21209 F4-15L
INSERT IN FLANGE	2
NUMBER OF FLANGES	2
LUBRICATED	NO
FLANGE 1 NAME	STIFF BKT
FLANGE 1 MATERIAL	AL 7075 T7351
FLANGE 1 MATERIAL SPEC	
FLANGE 1 THICKNESS [in]	0.236
FLANGE 1 HOLE DIAMETER [in]	0.25
FLANGE 2 NAME	TRD
FLANGE 2 MATERIAL	AL 7075 T7351
FLANGE 2 MATERIAL SPEC	
FLANGE 2 THICKNESS [in]	0.375
FLANGE 2 HOLE DIAMETER [in]	0.25
NOMINAL CONFIGURATION BOLT LOADS	
MAX AXIAL - CONFIGURATION ID	NOMINAL
MAX AXIAL - ELEMENT ID	2396078
MAX AXIAL - LOAD CASE ID	13
MAX AXIAL - AXIAL LOAD [N]	2448.0
max axial - axial load [lb]	550.3
MAX AXIAL - SHEAR LOAD [N]	2025.3
max axial - shear load [lb]	455.3
MAX SHEAR - CONFIGURATION ID	NOMINAL
MAX SHEAR - ELEMENT ID	2396078
MAX SHEAR - LOAD CASE ID	10
MAX SHEAR - AXIAL LOAD [N]	1688.1
max shear - axial load [lb]	379.5
MAX SHEAR - SHEAR LOAD [N]	2398.0
max shear - shear load [lb]	539.1
MAX COMBINED - CONFIGURATION ID	NOMINAL
MAX COMBINED - ELEMENT ID	SAME AS MAX SHEAR
MAX COMBINED - LOAD CASE ID	
MAX COMBINED - AXIAL LOAD [N]	
max combined - axial load [lb]	
MAX COMBINED - SHEAR LOAD [N]	
max combined - shear load [lb]	
SLIDING - CONFIGURATION ID	NOMINAL
SLIDING - ELEMENT ID	-
SLIDING - LOAD CASE ID	29
SLIDING - AXIAL LOAD [N]	0.0
sliding - axial load [lb]	0.0
SLIDING - SHEAR LOAD [N]	2900.0
sliding - shear load [lb]	651.9
WASHER DATA	
THICKNESS OF WASHER [in]	0.063
OUTER DIAMETER OF WASHER [in]	0.468
INNER DIAMETER OF WASHER [in]	0.255
BOLT HEAD DIAMETER [in]	0.37
FLANGE DATA	
THICK OF FLANGE 1 [in]	0.157
THICK OF FLANGE 2 [in]	0.375
DIAMETER OF HOLE [in]	0.25

BOLT MATERIAL PROPERTY DATA	
TEMP FACTOR FOR ULTIMATE STRENGHT	0.94
TEMP FACTOR FOR YIELD STRENGHT	0.94
ULTIMATE TENSILE ALLOWABLE STRESS [ksi]	160
YIELD TENSILE ALLOWABLE STRESS [ksi]	110
TEMP FACTOR FOR MODULUS	0.94
MODULUS OF ELASTICITY [ksi]	29100
THERMAL COEFF - HOT [1E(-6)/deg]	8.7
THERMAL COEFF - COLD [1E(-6)/deg]	8.5
INSERT MATERIAL PROPERTY DATA	
TEMP FACTOR FOR ULTIMATE STRENGHT	0.94
ULTIMATE TENSILE ALLOWABLE STRESS [ksi]	150
NUT MATERIAL PROPERTY DATA	
TEMP FACTOR FOR ULTIMATE STRENGHT	NA
TENSILE ULTIMATE ALLOWABLE STRESS [psi]	NA
ULTIMATE AXIAL LOAD [lb]	NA
WASHER MATERIAL PROPERTY DATA	
TEMP FACTOR FOR MODULUS	1
MODULUS OF ELASTICITY [ksi]	29100
FLANGE MATERIAL PROPERTY DATA	
TEMP FACTOR FOR MODULUS OF FLANGE 1	1
TEMP FACTOR FOR MODULUS OF FLANGE 2	1
TEMP FACTOR FOR ULTIMATE STRENGHT OF FLANGE 2	0.94
ULTIMATE SHEAR ALLOWABLE STRESS OF FLANGE 2 [psi]	37999.89
MODULUS OF ELASTICITY FOR FLANGE 1 [ksi]	10500
MODULUS OF ELASTICITY FOR FLANGE 2 [ksi]	10500
THERMAL COEFF OF FLANGE 1 - HOT [1E(-6)/deg]	12.15
THERMAL COEFF OF FLANGE 1 - COLD [1E(-6)/deg]	12.1
THERMAL COEFF OF FLANGE 2 - HOT [1E(-6)/deg]	12.15
THERMAL COEFF OF FLANGE 2 - COLD [1E(-6)/deg]	12.1
ULTIMATE BEARING ALLOWABLE STRESS FOR FLANGE 1 [psi]	102000
YIELD BEARING ALLOWABLE STRESS FOR FLANGE 1 [psi]	79000
ULTIMATE BEARING ALLOWABLE STRESS FOR FLANGE 2 [psi]	102000
YIELD BEARING ALLOWABLE STRESS FOR FLANGE 2 [psi]	79000
TORQUE AND PRELOAD DATA	
MAX TORQUE [lb in]	95.0
max torque [N m]	10.7
MIN TORQUE [lb in]	78.0
min torque [N m]	8.8
COEFFICIENT OF UTILIZATION [%]	74.689
LADING PLANE FACTOR	0.5
PRELOAD UNCETRAINTY	0.35
TORQUE COEFFICIENT	0.2
NOMINAL CONFIGURATION SUMMARY OF MARGINS FOR BOLTS	
MOS CALCULATION - CONFIGURATION ID	NOMINAL
JOINT SEPARATION	0.19 (MAX AXIAL)
DIRECT TENSION ULTIMATE	3.19 (MAX AXIAL)
DIRECT TENSION YIELD	3.61 (MAX AXIAL)
TOTAL TENSION ULTIMATE	0.83 (MAX AXIAL)
TOTAL TENSION YIELD	0.285 (MAX AXIAL)
DIRECT THREAD SHEAR ULTIMATE	4.09 (MAX AXIAL)
TOTAL THREAD SHEAR ULTIMATE	1.22 (MAX AXIAL)
SHEAR ULTIMATE	0.96 (SLIDING)
BENDING ULTIMATE	> 10
COMBINED SHEAR, TENSION AND BENDING ULTIMATE	0.475 (SLIDING)
NOMINAL CONFIGURATION MINIMUM MOS	0.19
NOMINAL CONFIGURATION MINIMUM ULTIMATE MOS	0.475
NOMINAL CONFIGURATION SUMMARY OF MARGINS FOR BEARING FLANGES	
FLANGE 1 - BEARING ULTIMATE	2.23
FLANGE 1 - BEARING YIELD	3.00
FLANGE 2 - BEARING ULTIMATE	6.71
FLANGE 2 - BEARING YIELD	8.56
NOMINAL CONFIGURATION MINIMUM MOS	FLANGE 1 - BEARING ULTIMATE

Table 8-13: JOINT 2b – nominal configuration

Questo documento contiene informazioni di proprietà di CARLO GAVAZZI SPACE SpA. Tutti i diritti sono riservati.
All information contained in this document are property of CARLO GAVAZZI SPACE SpA. All right reserved.

8.2.3.3 JOINT 3: SPOKES (NOMINAL CONF.)

SPOKES upper rod end/Radiator joint 3a are made of Ti 6Al 4V with an ultimate allowable tensile stress of -150 ksi.
SPOKES lower rod end/Radiator joint 3b are made of Ti 6Al 4V with an ultimate allowable tensile stress of -150 ksi.
Next images show the joint locations.

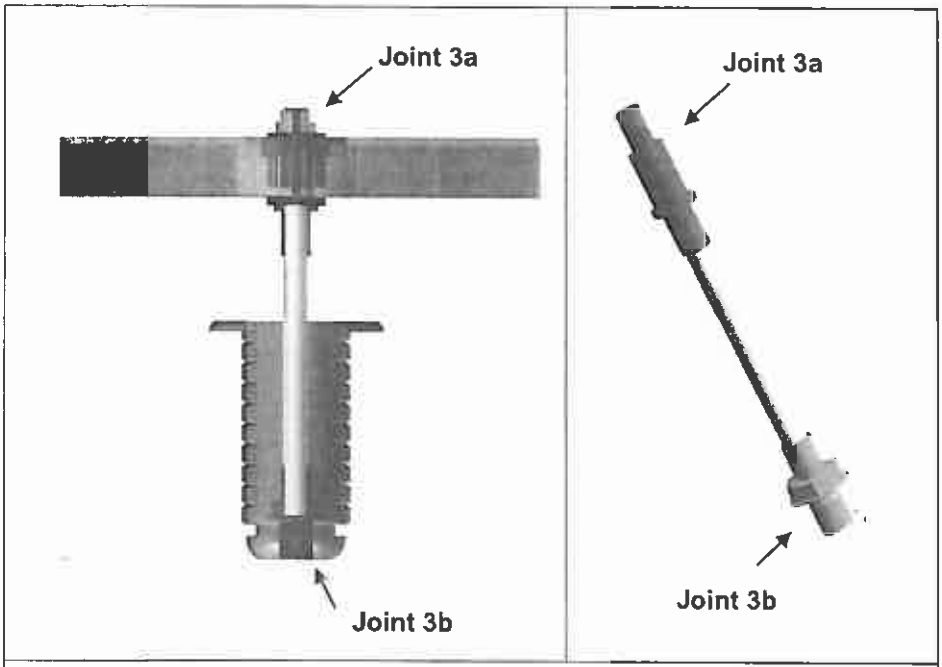

Figure 8-54: Joint 3a and Joint 3b

Next images show the forces on Joint 3a bolts (worst cases).

Questo documento contiene informazioni di proprietà di CARLO GAVAZZI SPACE SpA. Tutti i diritti sono riservati.
All information contained in this document are property of CARLO GAVAZZI SPACE SpA. All right reserved.

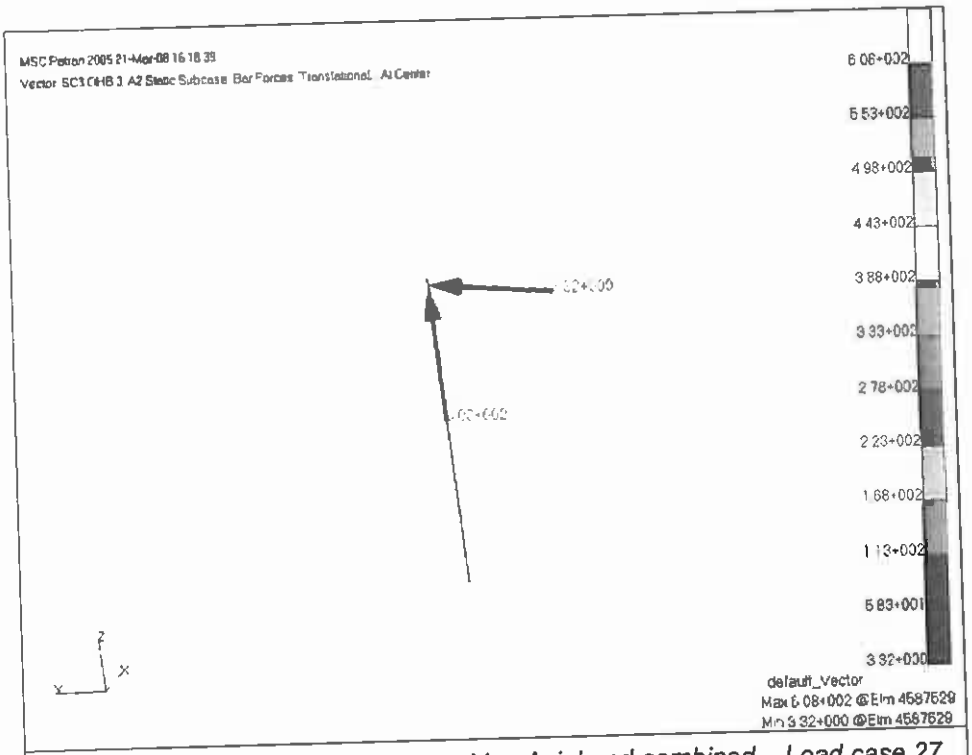

Figure 8-55: Forces on JOINT 3a – Max Axial and combined – Load case 27

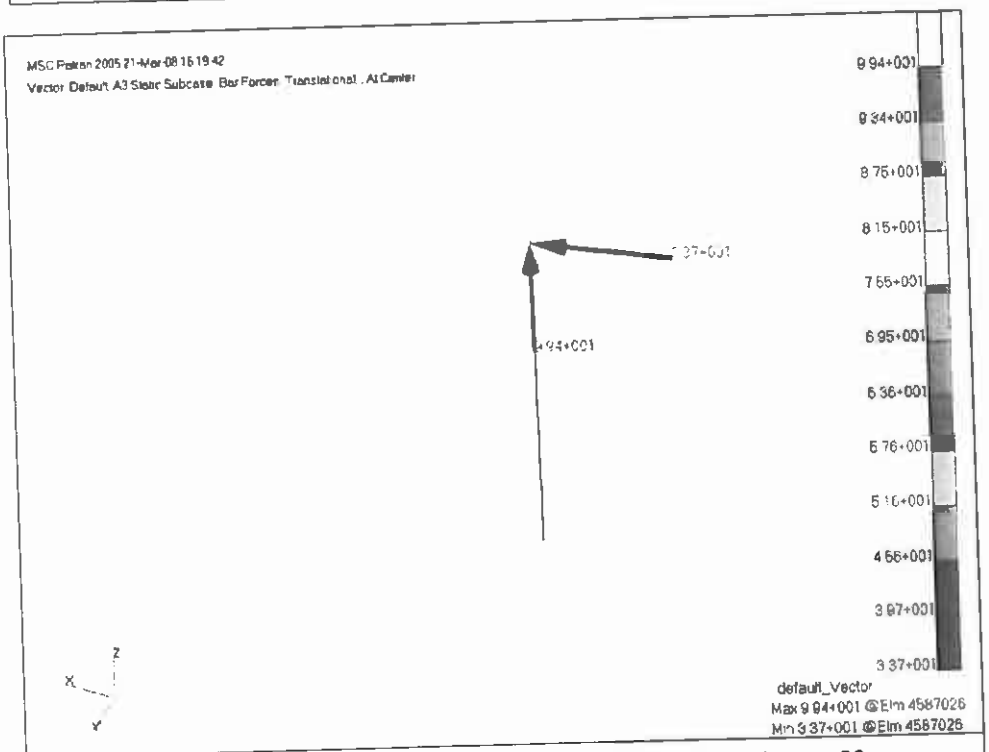

Figure 8-56: Forces on JOINT 3a– Max Shear– Load case 29

In the following table input and output data are shown.

Questo documento contiene informazioni di proprietà di CARLO GAVAZZI SPACE SpA. Tutti i diritti sono riservati.
All information contained in this document are property of CARLO GAVAZZI SPACE SpA. All right reserved.

JUNCTION PROPERTIES	
BOLT	SPOKES UPPER ROD END
WASHER 1	NAS1587-3
WASHER 2	NA
NUT	NAS1291C3M
INSERT	NA
INSERT IN FLANGE	NA
NUMBER OF FLANGES	1
LUBRICATED	NO
FLANGE 1 NAME	NA
FLANGE 1 MATERIAL	NA
FLANGE 1 MATERIAL SPEC	
FLANGE 1 THICKNESS [in]	NA
FLANGE 1 HOLE DIAMETER [in]	NA
FLANGE 2 NAME	ZR
FLANGE 2 MATERIAL	AL 7075 T7351
FLANGE 2 MATERIAL SPEC	
FLANGE 2 THICKNESS [in]	0.311
FLANGE 2 HOLE DIAMETER [in]	0 2
NOMINAL CONFIGURATION BOLT LOADS	
MAX AXIAL - CONFIGURATION ID	NOMINAL
MAX AXIAL - ELEMENT ID	4587529
MAX AXIAL - LOAD CASE ID	27
MAX AXIAL - AXIAL LOAD [N]	608.0
max axial - axial load [lb]	136.7
MAX AXIAL - SHEAR LOAD [N]	3.3
max axial - shear load [lb]	0.7
MAX SHEAR - CONFIGURATION ID	NOMINAL
MAX SHEAR - ELEMENT ID	4587026
MAX SHEAR - LOAD CASE ID	29
MAX SHEAR - AXIAL LOAD [N]	99 4
max shear - axial load [lb]	22.4
MAX SHEAR - SHEAR LOAD [N]	33 7
max shear - shear load [lb]	7 6
MAX COMBINED - CONFIGURATION ID	NOMINAL
MAX COMBINED - ELEMENT ID	SAME AS MAX AXIAL
MAX COMBINED - LOAD CASE ID	
MAX COMBINED - AXIAL LOAD [N]	
max combined - axial load [lb]	
MAX COMBINED - SHEAR LOAD [N]	
max combined - shear load [lb]	
WASHER DATA	
THICKNESS OF WASHER [in]	0.061
OUTER DIAMETER OF WASHER [in]	0.46
INNER DIAMETER OF WASHER [in]	0.195
BOLT HEAD DIAMETER [in]	NA
FLANGE DATA	
THICK OF FLANGE 1 [in]	NA
THICK OF FLANGE 2 [in]	0.311
DIAMETER OF HOLE [in]	0.2

BOLT MATERIAL PROPERTY DATA	
TEMP FACTOR FOR ULTIMATE STRENGHT	0 94
TEMP FACTOR FOR YIELD STRENGHT	0 94
ULTIMATE TENSILE ALLOWABLE STRESS [ksi]	150
YIELD TENSILE ALLOWABLE STRESS [ksi]	114
TEMP FACTOR FOR MODULUS	0 94
MODULUS OF ELASTICITY [ksi]	16900
THERMAL COEFF - HOT [1E(-6)/deg]	0
THERMAL COEFF - COLD [1E(-6)/deg]	7 6
INSERT MATERIAL PROPERTY DATA	
TEMP FACTOR FOR ULTIMATE STRENGHT	NA
ULTIMATE TENSILE ALLOWABLE STRESS [ksi]	NA
NUT MATERIAL PROPERTY DATA	
TEMP FACTOR FOR ULTIMATE STRENGHT	0 94
TENSILE ULTIMATE ALLOWABLE STRESS [psi]	125000
ULTIMATE AXIAL LOAD [lb]	6470
WASHER MATERIAL PROPERTY DATA	
TEMP FACTOR FOR MODULUS	1
MODULUS OF ELASTICITY [ksi]	29100
FLANGE MATERIAL PROPERTY DATA	
TEMP FACTOR FOR MODULUS OF FLANGE 1	NA
TEMP FACTOR FOR MODULUS OF FLANGE 2	1
TEMP FACTOR FOR ULTIMATE STRENGHT OF FLANGE 2	0 94
ULTIMATE SHEAR ALLOWABLE STRESS OF FLANGE 2 [psi]	37999 89
MODULUS OF ELASTICITY FOR FLANGE 1 [ksi]	NA
MODULUS OF ELASTICITY FOR FLANGE 2 [ksi]	10500
THERMAL COEFF OF FLANGE 1 - HOT [1E(-6)/deg]	NA
THERMAL COEFF OF FLANGE 1 - COLD [1E(-6)/deg]	NA
THERMAL COEFF OF FLANGE 2 - HOT [1E(-6)/deg]	12 15
THERMAL COEFF OF FLANGE 2 - COLD [1E(-6)/deg]	12 1
ULTIMATE BEARING ALLOWABLE STRESS FOR FLANGE 1 [psi]	NA
YIELD BEARING ALLOWABLE STRESS FOR FLANGE 1 [psi]	NA
ULTIMATE BEARING ALLOWABLE STRESS FOR FLANGE 2 [psi]	102000
YIELD BEARING ALLOWABLE STRESS FOR FLANGE 2 [psi]	79000
TORQUE AND PRELOAD DATA	
MAX TORQUE [lb in]	42 0
max torque [N m]	4 7
MIN TORQUE [lb in]	36 0
min torque [N m]	4 1
COEFFICIENT OF UTILIZATION [%]	74 5
LADING PLANE FACTOR	0 5
PRELOAD UNCETRAINTY	0 35
TORQUE COEFFICIENT	0 2
NOMINAL CONFIGURATION SUMMARY OF MARGINS FOR BOLTS	
MOS CALCULATION - CONFIGURATION ID	NOMINAL
JOINT SEPARATION	1 86 (MAX AXIAL)
DIRECT TENSION ULTIMATE	8 19 (MAX AXIAL)
DIRECT TENSION YIELD	9 5 (MAX AXIAL)
TOTAL TENSION ULTIMATE	0 45 (MAX AXIAL)
TOTAL TENSION YIELD	0 33 (MAX AXIAL)
DIRECT THREAD SHEAR ULTIMATE	7 63 (MAX AXIAL)
TOTAL THREAD SHEAR ULTIMATE	0 74 (MAX AXIAL)
SHEAR ULTIMATE	113 35 (MAX SHEAR)
BENDING ULTIMATE	> 10
COMBINED SHEAR, TENSION AND BENDING ULTIMATE	0 45 (MAX AXIAL)
NOMINAL CONFIGURATION MINIMUM MOS	0 33
NOMINAL CONFIGURATION MINIMUM ULTIMATE MOS	0 45
NOMINAL CONFIGURATION SUMMARY OF MARGINS FOR BEARING FLANGES	
FLANGE 1 - BEARING ULTIMATE	NA
FLANGE 1 - BEARING YIELD	
FLANGE 2 - BEARING ULTIMATE	363 25
FLANGE 2 - BEARING YIELD	3417 30
NOMINAL CONFIGURATION MINIMUM MOS	FLANGE 2 - BEARING ULTIMATE

Table 8-14: JOINT 3a – nominal configuration

Questo documento contiene informazioni di proprietà di CARLO GAVAZZI SPACE SpA. Tutti i diritti sono riservati.
All information contained in this document are property of CARLO GAVAZZI SPACE SpA. All right reserved.

The forces on Joint 3b bolts (worst cases) are the same of Joint 3a shown in the Figure 8-45 and Figure 8-46. In the following table input and output data are shown.

JUNCTION PROPERTIES	
BOLT	SPOKES LOWER ROD END
WASHER 1	NA
WASHER 2	NA
NUT	NA
INSERT	Bollhoff helicoil plus 4130 074 7006
INSERT IN FLANGE	1
NUMBER OF FLANGES	1
LUBRICATED	NO
FLANGE 1 NAME	NA
FLANGE 1 MATERIAL	NA
FLANGE 1 MATERIAL SPEC	
FLANGE 1 THICKNESS [in]	NA
FLANGE 1 HOLE DIAMETER [in]	NA
FLANGE 2 NAME	TRD
FLANGE 2 MATERIAL	AL 7075 T7351
FLANGE 2 MATERIAL SPEC	
FLANGE 2 THICKNESS [in]	0.4
FLANGE 2 HOLE DIAMETER [in]	0.26
NOMINAL CONFIGURATION BOLT LOADS	
MAX AXIAL - CONFIGURATION ID	NOMINAL
MAX AXIAL - ELEMENT ID	6385997
MAX AXIAL - LOAD CASE ID	27
MAX AXIAL - AXIAL LOAD [N]	608.0
max axial - axial load [lb]	136.7
MAX AXIAL - SHEAR LOAD [N]	3.3
max axial - shear load [lb]	0.7
MAX SHEAR - CONFIGURATION ID	NOMINAL
MAX SHEAR - ELEMENT ID	6385878
MAX SHEAR - LOAD CASE ID	29
MAX SHEAR - AXIAL LOAD [N]	99.4
max shear - axial load [lb]	22.4
MAX SHEAR - SHEAR LOAD [N]	33.7
max shear - shear load [lb]	7.6
MAX COMBINED - CONFIGURATION ID	NOMINAL
MAX COMBINED - ELEMENT ID	SAME AS MAX AXIAL
MAX COMBINED - LOAD CASE ID	
MAX COMBINED - AXIAL LOAD [N]	
max combined - axial load [lb]	
MAX COMBINED - SHEAR LOAD [N]	
max combined - shear load [lb]	
WASHER DATA	
THICKNESS OF WASHER [in]	0
OUTER DIAMETER OF WASHER [in]	0
INNER DIAMETER OF WASHER [in]	0
BOLT HEAD DIAMETER [in]	0.47
FLANGE DATA	
THICK OF FLANGE 1 [in]	NA
THICK OF FLANGE 2 [in]	0.4
DIAMETER OF HOLE [in]	0.26

BOLT MATERIAL PROPERTY DATA	
TEMP FACTOR FOR ULTIMATE STRENGHT	0.94
TEMP FACTOR FOR YIELD STRENGHT	0.94
ULTIMATE TENSILE ALLOWABLE STRESS [ksi]	125
YIELD TENSILE ALLOWABLE STRESS [ksi]	114
TEMP FACTOR FOR MODULUS	0.94
MODULUS OF ELASTICITY [ksi]	16900
THERMAL COEFF - HOT [1E(-6)/deg]	9
THERMAL COEFF - COLD [1E(-6)/deg]	7.6
INSERT MATERIAL PROPERTY DATA	
TEMP FACTOR FOR ULTIMATE STRENGHT	0.94
ULTIMATE TENSILE ALLOWABLE STRESS [ksi]	101
NUT MATERIAL PROPERTY DATA	
TEMP FACTOR FOR ULTIMATE STRENGHT	NA
TENSILE ULTIMATE ALLOWABLE STRESS [psi]	NA
ULTIMATE AXIAL LOAD [lb]	NA
WASHER MATERIAL PROPERTY DATA	
TEMP FACTOR FOR MODULUS	1
MODULUS OF ELASTICITY [ksi]	29100
FLANGE MATERIAL PROPERTY DATA	
TEMP FACTOR FOR MODULUS OF FLANGE 1	NA
TEMP FACTOR FOR MODULUS OF FLANGE 2	1
TEMP FACTOR FOR ULTIMATE STRENGHT OF FLANGE 2	0.94
ULTIMATE SHEAR ALLOWABLE STRESS OF FLANGE 2 [psi]	37500.00
MODULUS OF ELASTICITY FOR FLANGE 1 [ksi]	NA
MODULUS OF ELASTICITY FOR FLANGE 2 [ksi]	10500
THERMAL COEFF OF FLANGE 1 - HOT [1E(-6)/deg]	NA
THERMAL COEFF OF FLANGE 1 - COLD [1E(-6)/deg]	NA
THERMAL COEFF OF FLANGE 2 - HOT [1E(-6)/deg]	12.15
THERMAL COEFF OF FLANGE 2 - COLD [1E(-6)/deg]	11.5
ULTIMATE BEARING ALLOWABLE STRESS FOR FLANGE 1 [psi]	NA
YIELD BEARING ALLOWABLE STRESS FOR FLANGE 1 [psi]	NA
ULTIMATE BEARING ALLOWABLE STRESS FOR FLANGE 2 [psi]	102000
YIELD BEARING ALLOWABLE STRESS FOR FLANGE 2 [psi]	79000
TORQUE AND PRELOAD DATA	
MAX TORQUE [lb in]	95.0
max torque [N m]	10.7
MIN TORQUE [lb in]	85.0
min torque [N m]	9.6
COEFFICIENT OF UTILIZATION [%]	71.2
LADING PLANE FACTOR	0.5
PRELOAD UNCETRAINTY	0.25
TORQUE COEFFICIENT	0.2
NOMINAL CONFIGURATION SUMMARY OF MARGINS FOR BOLTS	
MOS CALCULATION - CONFIGURATION ID	NOMINAL
JOINT SEPARATION	4.37 (MAX AXIAL)
DIRECT TENSION ULTIMATE	12.19 (MAX AXIAL)
DIRECT TENSION YIELD	18.24 (MAX AXIAL)
TOTAL TENSION ULTIMATE	0.52 (MAX AXIAL)
TOTAL TENSION YIELD	0.591 (MAX AXIAL)
DIRECT THREAD SHEAR ULTIMATE	11.78 (MAX AXIAL)
TOTAL THREAD SHEAR ULTIMATE	0.47 (MAX AXIAL)
SHEAR ULTIMATE	133.52 (MAX SHEAR)
BENDING ULTIMATE	> 10
COMBINED SHEAR, TENSION AND BENDING ULTIMATE	0.516 (MAX AXIAL)
NOMINAL CONFIGURATION MINIMUM MOS	0.391
NOMINAL CONFIGURATION MINIMUM ULTIMATE MOS	0.47
NOMINAL CONFIGURATION SUMMARY OF MARGINS FOR BEARING FLANGES	
FLANGE 1 - BEARING ULTIMATE	NA
FLANGE 1 - BEARING YIELD	
FLANGE 2 - BEARING ULTIMATE	608.04
FLANGE 2 - BEARING YIELD	753.73
NOMINAL CONFIGURATION MINIMUM MOS	FLANGE 2 - BEARING ULTIMATE

Table 8-15: JOINT 3b – nominal configuration

Questo documento contiene informazioni di proprietà di CARLO GAVAZZI SPACE SpA. Tutti i diritti sono riservati.
All information contained in this document are property of CARLO GAVAZZI SPACE SpA. All right reserved.

8.2.3.4 JOINT 4: GPS ANTENNA SUPPORT/TRD (NOMINAL CONF.)

GPS ANTENNA SUPPORT/TRD joint 4 are NAS1351N4LE12 bolts made of stainless steel A286-160 ksi. Next images show the bolt locations.

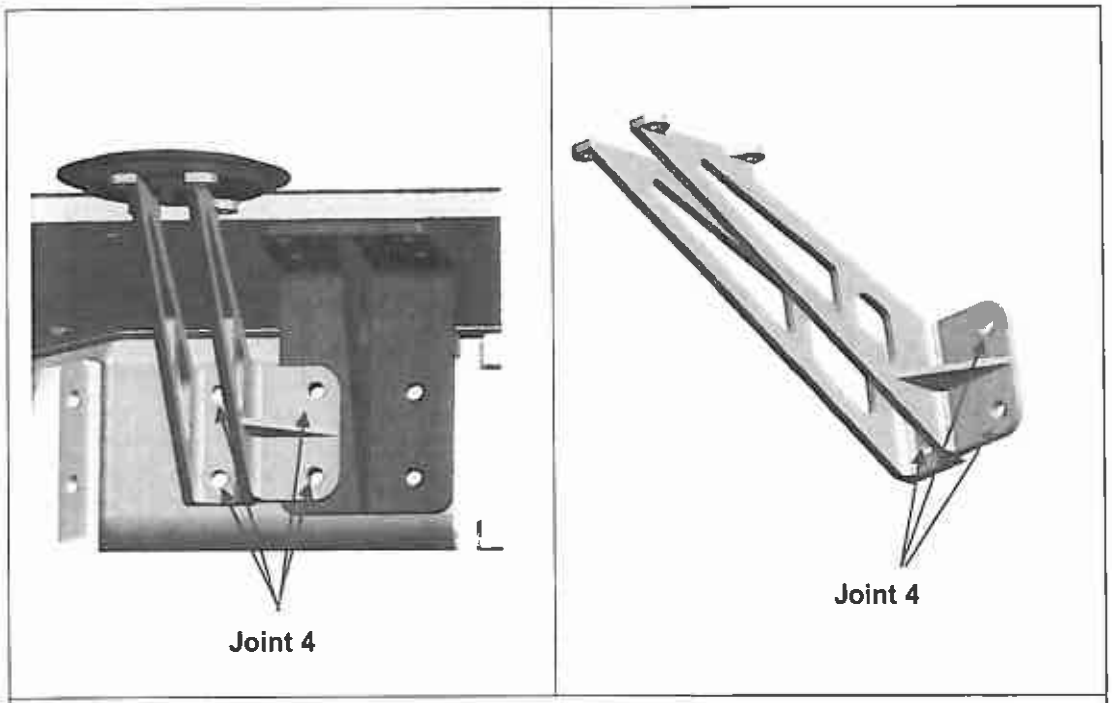

Figure 8-57: Joint 4

The same methodology of Joint 2b is used to not consider the forces on bolts due to the thermo elastic load case that generates unreal stiffness of the constraint subjected to thermal load. The load case due to the sliding is added in the junction analysis.

Questo documento contiene informazioni di proprietà di CARLO GAVAZZI SPACE SpA. Tutti i diritti sono riservati.
All information contained in this document are property of CARLO GAVAZZI SPACE SpA. All right reserved.

Next images show the forces on Joint 4 bolts (worst cases).

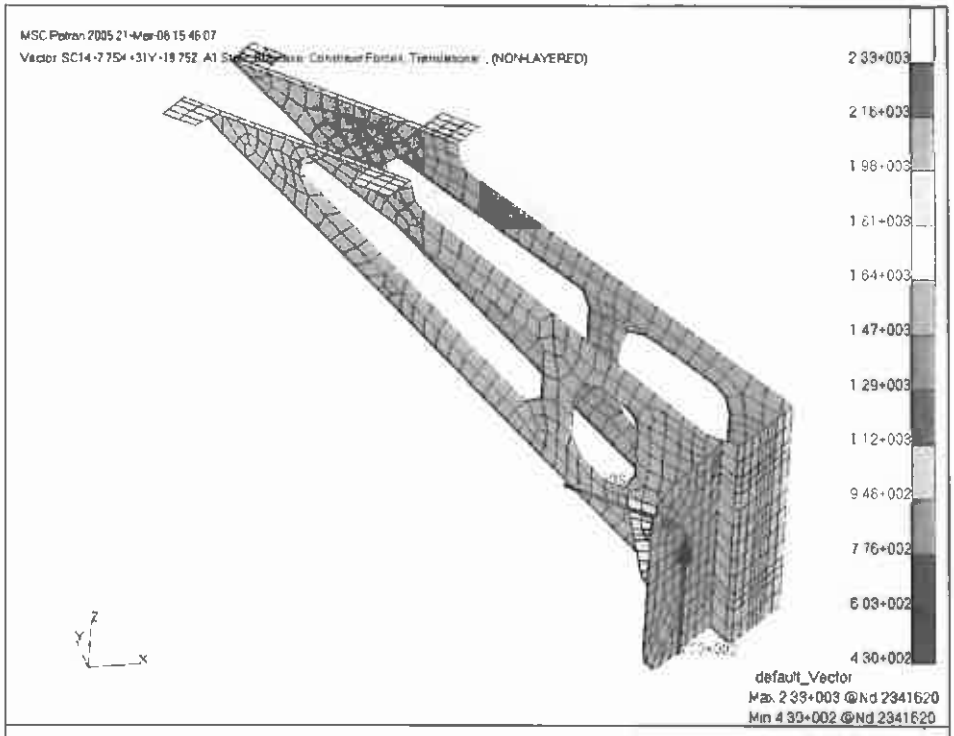

Figure 8-58: Forces on JOINT 4 – Max Axial and combined – Load case 14

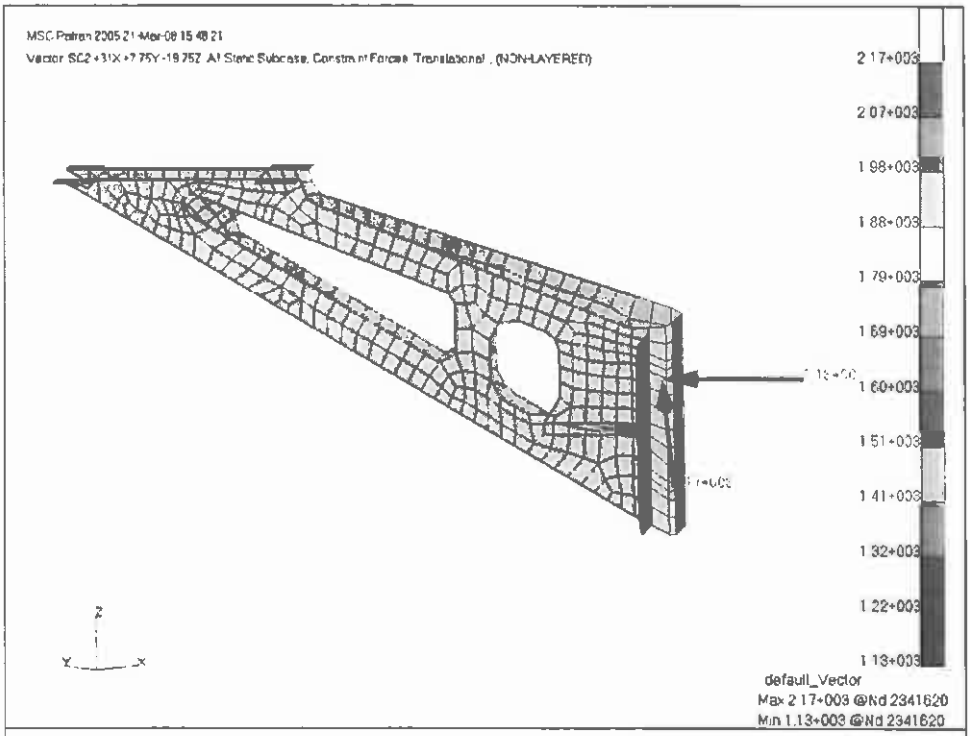

Figure 8-59: Forces on JOINT 4 – Max Shear – Load case 02

Questo documento contiene informazioni di proprietà di CARLO GAVAZZI SPACE SpA. Tutti i diritti sono riservati.
All information contained in this document are property of CARLO GAVAZZI SPACE SpA. All right reserved.

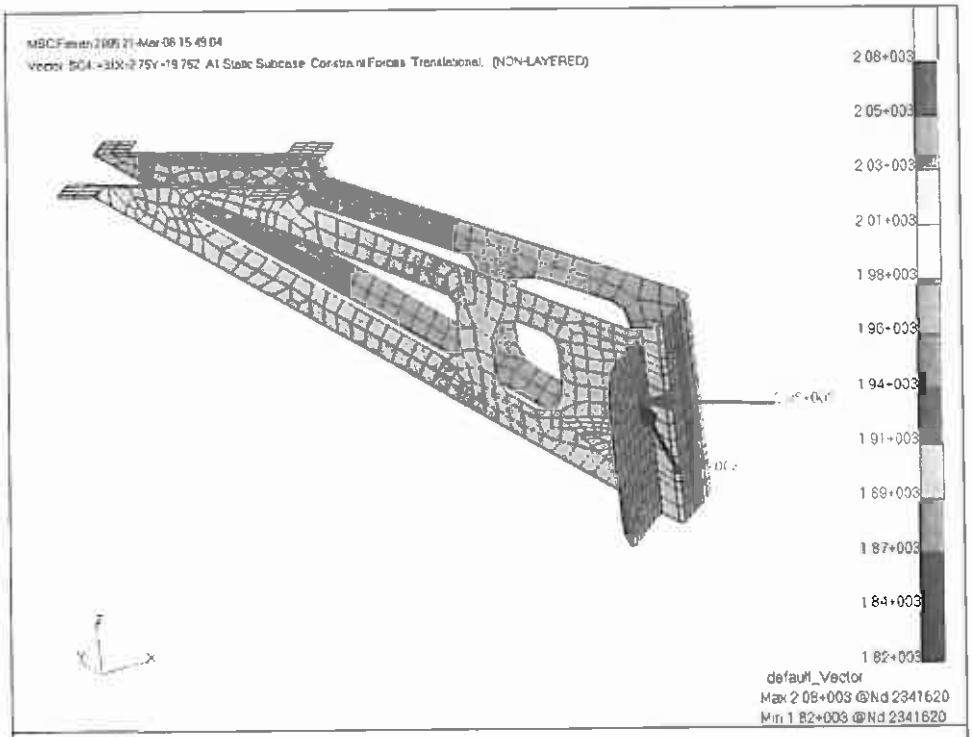

Figure 8-60: Forces on JOINT 4 – Max Combined – Load case 04

In the following table input and output data are shown.

Questo documento contiene informazioni di proprietà di CARLO GAVAZZI SPACE SpA. Tutti i diritti sono riservati.
All information contained in this document are property of CARLO GAVAZZI SPACE SpA. All right reserved.

JUNCTION PROPERTIES	
BOLT	NAS1351N4LE12
WASHER 1	NAS620C416
WASHER 2	NA
NUT	NA
INSERT	MS21209 F4-15L
INSERT IN FLANGE	2
NUMBER OF FLANGES	2
LUBRICATED	NO
FLANGE 1 NAME	GPS
FLANGE 1 MATERIAL	AL 7075 T7351
FLANGE 1 MATERIAL SPEC	
FLANGE 1 THICKNESS [in]	0.2362
FLANGE 1 HOLE DIAMETER [in]	0.25
FLANGE 2 NAME	TRD
FLANGE 2 MATERIAL	AL 7075 T7351
FLANGE 2 MATERIAL SPEC	
FLANGE 2 THICKNESS [in]	0.306
FLANGE 2 HOLE DIAMETER [in]	0.25
NOMINAL CONFIGURATION BOLT LOADS	
MAX AXIAL - CONFIGURATION ID	NOMINAL
MAX AXIAL - ELEMENT ID	2341620
MAX AXIAL - LOAD CASE ID	14
MAX AXIAL - AXIAL LOAD [N]	2329.4
max axial - axial load [lb]	523.7
MAX AXIAL - SHEAR LOAD [N]	455.5
max axial - shear load [lb]	102.4
MAX SHEAR - CONFIGURATION ID	NOMINAL
MAX SHEAR - ELEMENT ID	2341620
MAX SHEAR - LOAD CASE ID	2
MAX SHEAR - AXIAL LOAD [N]	1129.2
max shear - axial load [lb]	253.8
MAX SHEAR - SHEAR LOAD [N]	2165.4
max shear - shear load [lb]	486.8
MAX COMBINED - CONFIGURATION ID	NOMINAL
MAX COMBINED - ELEMENT ID	2341620
MAX COMBINED - LOAD CASE ID	4
MAX COMBINED - AXIAL LOAD [N]	2078.2
max combined - axial load [lb]	467.2
MAX COMBINED - SHEAR LOAD [N]	1819.3
max combined - shear load [lb]	409.0
SLIDING - CONFIGURATION ID	NOMINAL
SLIDING - ELEMENT ID	-
SLIDING - LOAD CASE ID	29
SLIDING - AXIAL LOAD [N]	0.0
sliding - axial load [lb]	0.0
SLIDING - SHEAR LOAD [N]	2900.0
sliding - shear load [lb]	651.9
WASHER DATA	
THICKNESS OF WASHER [in]	0.063
OUTER DIAMETER OF WASHER [in]	0.468
INNER DIAMETER OF WASHER [in]	0.255
BOLT HEAD DIAMETER [in]	0.37
FLANGE DATA	
THICK OF FLANGE 1 [in]	0.2362
THICK OF FLANGE 2 [in]	0.306
DIAMETER OF HOLE [in]	0.25

BOLT MATERIAL PROPERTY DATA	
TEMP FACTOR FOR ULTIMATE STRENGHT	0.94
TEMP FACTOR FOR YIELD STRENGHT	0.94
ULTIMATE TENSILE ALLOWABLE STRESS [ksi]	160
YIELD TENSILE ALLOWABLE STRESS [ksi]	110
TEMP FACTOR FOR MODULUS	0.94
MODULUS OF ELASTICITY [ksi]	29100
THERMAL COEFF - HOT [1E(-6)/deg]	8.7
THERMAL COEFF - COLD [1E(-6)/deg]	8.5
INSERT MATERIAL PROPERTY DATA	
TEMP FACTOR FOR ULTIMATE STRENGHT	1
ULTIMATE TENSILE ALLOWABLE STRESS [ksi]	150
NUT MATERIAL PROPERTY DATA	
TEMP FACTOR FOR ULTIMATE STRENGHT	NA
TENSILE ULTIMATE ALLOWABLE STRESS [psi]	NA
ULTIMATE AXIAL LOAD [lb]	NA
WASHER MATERIAL PROPERTY DATA	
TEMP FACTOR FOR MODULUS	1
MODULUS OF ELASTICITY [ksi]	29100
FLANGE MATERIAL PROPERTY DATA	
TEMP FACTOR FOR MODULUS OF FLANGE 1	1
TEMP FACTOR FOR MODULUS OF FLANGE 2	1
TEMP FACTOR FOR ULTIMATE STRENGHT OF FLANGE 2	0.94
ULTIMATE SHEAR ALLOWABLE STRESS OF FLANGE 2 [psi]	37999.89
MODULUS OF ELASTICITY FOR FLANGE 1 [ksi]	10500
MODULUS OF ELASTICITY FOR FLANGE 2 [ksi]	10500
THERMAL COEFF OF FLANGE 1 - HOT [1E(-6)/deg]	12.15
THERMAL COEFF OF FLANGE 1 - COLD [1E(-6)/deg]	12.1
THERMAL COEFF OF FLANGE 2 - HOT [1E(-6)/deg]	12.15
THERMAL COEFF OF FLANGE 2 - COLD [1E(-6)/deg]	12.10
ULTIMATE BEARING ALLOWABLE STRESS FOR FLANGE 1 [psi]	102000
YIELD BEARING ALLOWABLE STRESS FOR FLANGE 1 [psi]	79000
ULTIMATE BEARING ALLOWABLE STRESS FOR FLANGE 2 [psi]	102000
YIELD BEARING ALLOWABLE STRESS FOR FLANGE 2 [psi]	79000
TORQUE AND PRELOAD DATA	
MAX TORQUE [lb in]	95.0
max torque [N m]	10.7
MIN TORQUE [lb in]	77.0
min torque [N m]	8.7
COEFFICIENT OF UTILIZATION [%]	74.689
LADING PLANE FACTOR	0.5
PRELOAD UNCETRAINTY	0.35
TORQUE COEFFICIENT	0.2
NOMINAL CONFIGURATION SUMMARY OF MARGINS FOR BOLTS	
MOS CALCULATION - CONFIGURATION ID	NOMINAL
JOINT SEPARATION	0.23 (MAX AXIAL)
DIRECT TENSION ULTIMATE	3.41 (MAX AXIAL)
DIRECT TENSION YIELD	3.85 (MAX AXIAL)
TOTAL TENSION ULTIMATE	0.83 (MAX AXIAL)
TOTAL TENSION YIELD	0.288 (MAX AXIAL)
DIRECT THREAD SHEAR ULTIMATE	4.35 (MAX AXIAL)
TOTAL THREAD SHEAR ULTIMATE	1.22 (MAX AXIAL)
SHEAR ULTIMATE	0.96 (SLIDING)
BENDING ULTIMATE	> 10
COMBINED SHEAR, TENSION AND BENDING ULTIMATE	0.475 (SLIDING)
NOMINAL CONFIGURATION MINIMUM MOS	0.23
NOMINAL CONFIGURATION MINIMUM ULTIMATE MOS	0.475
NOMINAL CONFIGURATION SUMMARY OF MARGINS FOR BEARING FLANGES	
FLANGE 1 - BEARING ULTIMATE	4.38
FLANGE 1 - BEARING YIELD	5.67
FLANGE 2 - BEARING ULTIMATE	5.97
FLANGE 2 - BEARING YIELD	7.64
NOMINAL CONFIGURATION MINIMUM MOS	FLANGE 1 - BEARING ULTIMATE

Table 8-16: JOINT 4 – nominal configuration

Questo documento contiene informazioni di proprietà di CARLO GAVAZZI SPACE SpA. Tutti i diritti sono riservati.
All information contained in this document are property of CARLO GAVAZZI SPACE SpA. All right reserved.

8.2.3.5 JOINT 5: GPS ANTENNA/GPS ANTENNA SUPPORT (NOMINAL CONF.)

GPS ANTENNA/GPS ANTENNA SUPPORT joint 5 are DIN 965 M3x16 made of stainless steel A2-70
Next image shows the bolt location.

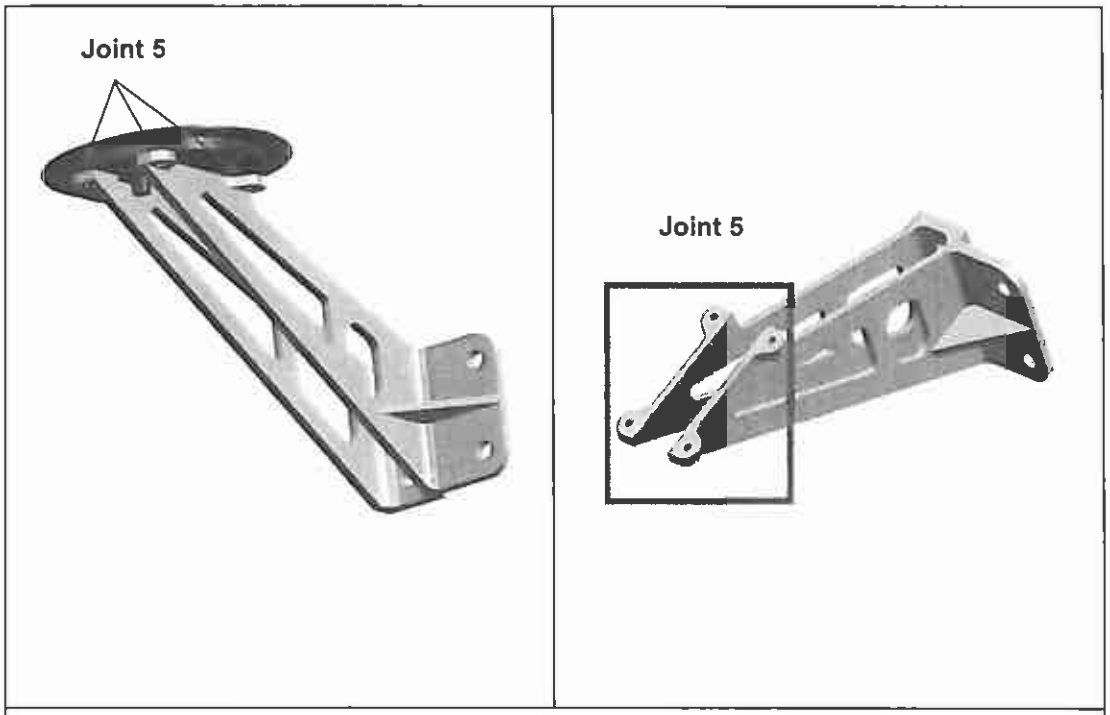

Figure 8-61: Joint 5

Questo documento contiene informazioni di proprietà di CARLO GAVAZZI SPACE SpA. Tutti i diritti sono riservati.
All information contained in this document are property of CARLO GAVAZZI SPACE SpA. All right reserved.

Next images show the forces on Joint 5 bolts (worst cases).

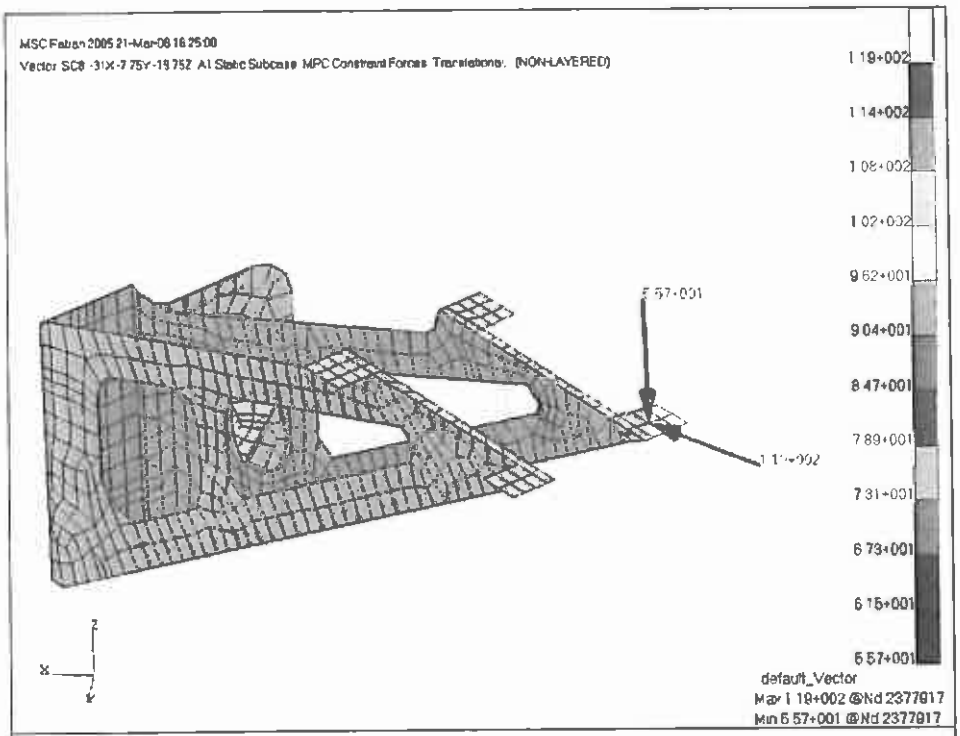

Figure 8-62: Forces on JOINT 5 – Max Axial and combined – Load case 08

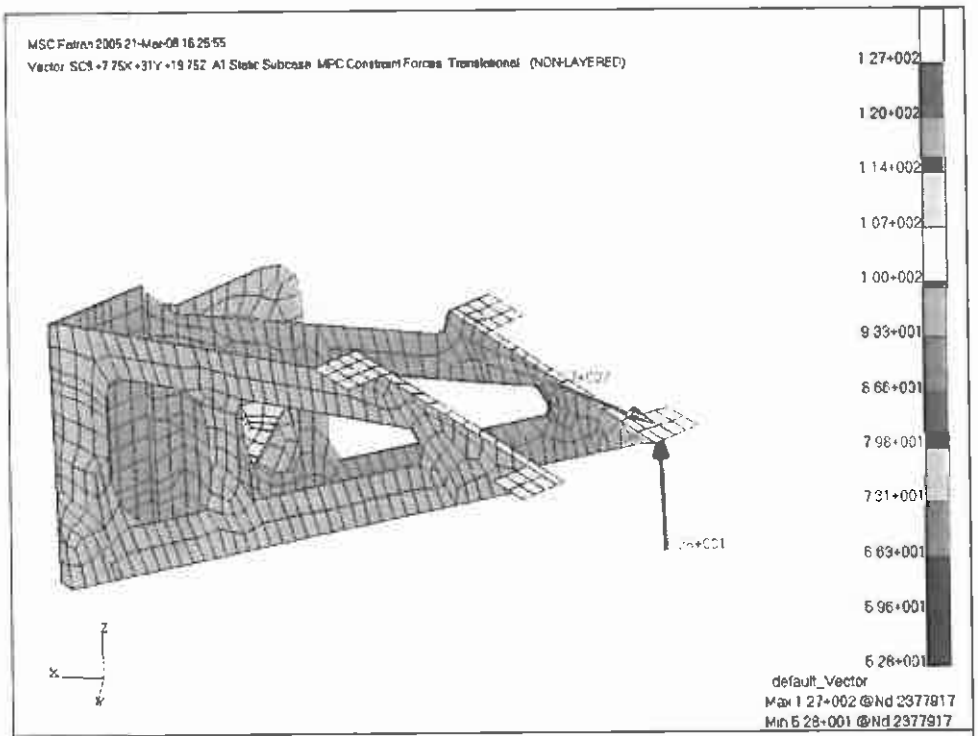

Figure 8-63: Forces on JOINT 5 – Max Shear – Load case 09

In the following table input and output data are shown.

Questo documento contiene informazioni di proprietà di CARLO GAVAZZI SPACE SpA. Tutti i diritti sono riservati.
All information contained in this document are property of CARLO GAVAZZI SPACE SpA. All right reserved.

JUNCTION PROPERTIES	
BOLT	DIN 965 M3x16
WASHER 1	NA
WASHER 2	NA
NUT	NA
INSERT	LN9499 M3x1d
INSERT IN FLANGE	2
NUMBER OF FLANGES	2
LUBRICATED	NO
FLANGE 1 NAME	GPS
FLANGE 1 MATERIAL	AL 7075 T7351
FLANGE 1 MATERIAL SPEC	
FLANGE 1 THICKNESS [in]	0.098
FLANGE 1 HOLE DIAMETER [in]	0.112
FLANGE 2 NAME	ANTENNA
FLANGE 2 MATERIAL	AL 7075 T7351
FLANGE 2 MATERIAL SPEC	
FLANGE 2 THICKNESS [in]	0.157
FLANGE 2 HOLE DIAMETER [in]	0 112
NOMINAL CONFIGURATION BOLT LOADS	
MAX AXIAL - CONFIGURATION ID	NOMINAL
MAX AXIAL - ELEMENT ID	2377917
MAX AXIAL - LOAD CASE ID	8
MAX AXIAL - AXIAL LOAD [N]	55.7
max axial - axial load [lb]	12.5
MAX AXIAL - SHEAR LOAD [N]	119 3
max axial - shear load [lb]	26.8
MAX SHEAR - CONFIGURATION ID	L
MAX SHEAR - ELEMENT ID	2377917
MAX SHEAR - LOAD CASE ID	9
MAX SHEAR - AXIAL LOAD [N]	52 8
max shear - axial load [lb]	11.9
MAX SHEAR - SHEAR LOAD [N]	127.1
max shear - shear load [lb]	28.6
MAX COMBINED - CONFIGURATION ID	NOMINAL
MAX COMBINED - ELEMENT ID	SAME AS MAX AXIAL
MAX COMBINED - LOAD CASE ID	
MAX COMBINED - AXIAL LOAD [N]	
max combined - axial load [lb]	
MAX COMBINED - SHEAR LOAD [N]	
max combined - shear load [lb]	
WASHER DATA	
THICKNESS OF WASHER [in]	0
OUTER DIAMETER OF WASHER [in]	0
INNER DIAMETER OF WASHER [in]	0
BOLT HEAD DIAMETER [in]	0 22
FLANGE DATA	
THICK OF FLANGE 1 [in]	0.098
THICK OF FLANGE 2 [in]	0.157
DIAMETER OF HOLE [in]	0 112

BOLT MATERIAL PROPERTY DATA	
TEMP FACTOR FOR ULTIMATE STRENGHT	0 94
TEMP FACTOR FOR YIELD STRENGHT	0 94
ULTIMATE TENSILE ALLOWABLE STRESS [ksi]	101 526
YIELD TENSILE ALLOWABLE STRESS [ksi]	85 267
TEMP FACTOR FOR MODULUS	0 94
MODULUS OF ELASTICITY [ksi]	29100
THERMAL COEFF - HOT [1E(-6)/deg]	8 7
THERMAL COEFF - COLD [1E(-6)/deg]	8 5
INSERT MATERIAL PROPERTY DATA	
TEMP FACTOR FOR ULTIMATE STRENGHT	1
ULTIMATE TENSILE ALLOWABLE STRESS [ksi]	115000
NUT MATERIAL PROPERTY DATA	
TEMP FACTOR FOR ULTIMATE STRENGHT	NA
TENSILE ULTIMATE ALLOWABLE STRESS [psi]	NA
ULTIMATE AXIAL LOAD [lb]	NA
WASHER MATERIAL PROPERTY DATA	
TEMP FACTOR FOR MODULUS	1
MODULUS OF ELASTICITY [ksi]	29100
FLANGE MATERIAL PROPERTY DATA	
TEMP FACTOR FOR MODULUS OF FLANGE 1	1
TEMP FACTOR FOR MODULUS OF FLANGE 2	1
TEMP FACTOR FOR ULTIMATE STRENGHT OF FLANGE 2	0 94
ULTIMATE SHEAR ALLOWABLE STRESS OF FLANGE 2 [psi]	37999 89
MODULUS OF ELASTICITY FOR FLANGE 1 [ksi]	10500
MODULUS OF ELASTICITY FOR FLANGE 2 [ksi]	10500
THERMAL COEFF OF FLANGE 1 - HOT [1E(-6)/deg]	12 15
THERMAL COEFF OF FLANGE 1 - COLD [1E(-6)/deg]	12 1
THERMAL COEFF OF FLANGE 2 - HOT [1E(-6)/deg]	12 15
THERMAL COEFF OF FLANGE 2 - COLD [1E(-6)/deg]	12 1
ULTIMATE BEARING ALLOWABLE STRESS FOR FLANGE 1 [psi]	102000
YIELD BEARING ALLOWABLE STRESS FOR FLANGE 1 [psi]	79000
ULTIMATE BEARING ALLOWABLE STRESS FOR FLANGE 2 [psi]	102000
YIELD BEARING ALLOWABLE STRESS FOR FLANGE 2 [psi]	79000
TORQUE AND PRELOAD DATA	
MAX TORQUE [lb in]	4 0
max torque [N m]	0 5
MIN TORQUE [lb in]	3 8
min torque [N m]	0 4
COEFFICIENT OF UTILIZATION [%]	67 893
LADING PLANE FACTOR	0 5
PRELOAD UNCETRAINTY	0 35
TORQUE COEFFICIENT	0 2
NOMINAL CONFIGURATION SUMMARY OF MARGINS FOR BOLTS	
MOS CALCULATION - CONFIGURATION ID	NOMINAL
JOINT SEPARATION	3 62 (MAX AXIAL)
DIRECT TENSION ULTIMATE	20 75 (MAX AXIAL)
DIRECT TENSION YIELD	21 37 (MAX AXIAL)
TOTAL TENSION ULTIMATE	1 27 (MAX AXIAL)
TOTAL TENSION YIELD	0 485 (MAX AXIAL)
DIRECT THREAD SHEAR ULTIMATE	33 27 (MAX AXIAL)
TOTAL THREAD SHEAR ULTIMATE	2 57 (MAX AXIAL)
SHEAR ULTIMATE	3 93 (MAX SHEAR)
BENDING ULTIMATE	> 10
COMBINED SHEAR, TENSION AND BENDING ULTIMATE	1 17 (MAX SHEAR)
NOMINAL CONFIGURATION MINIMUM MOS	0 485
NOMINAL CONFIGURATION MINIMUM ULTIMATE MOS	1 17
NOMINAL CONFIGURATION SUMMARY OF MARGINS FOR BEARING FLANGES	
FLANGE 1 - BEARING ULTIMATE	16 04
FLANGE 1 - BEARING YIELD	20 12
FLANGE 2 - BEARING ULTIMATE	26 30
FLANGE 2 - BEARING YIELD	32 83
NOMINAL CONFIGURATION MINIMUM MOS	FLANGE 1 - BEARING ULTIMATE

Table 8-17: JOINT 5 – nominal configuration

Questo documento contiene informazioni di proprietà di CARLO GAVAZZI SPACE SpA. Tutti i diritti sono riservati.
All information contained in this document are property of CARLO GAVAZZI SPACE SpA. All right reserved.

8.2.3.6 JOINT 6: VSB - VACUUM CASE JOINT (NOMINAL CONF.)

VSB - VACUUM CASE Joint 6 are NAS1351 C6-20 bolts made of stainless steel A286-80 ksi.
Next image shows the bolt location.

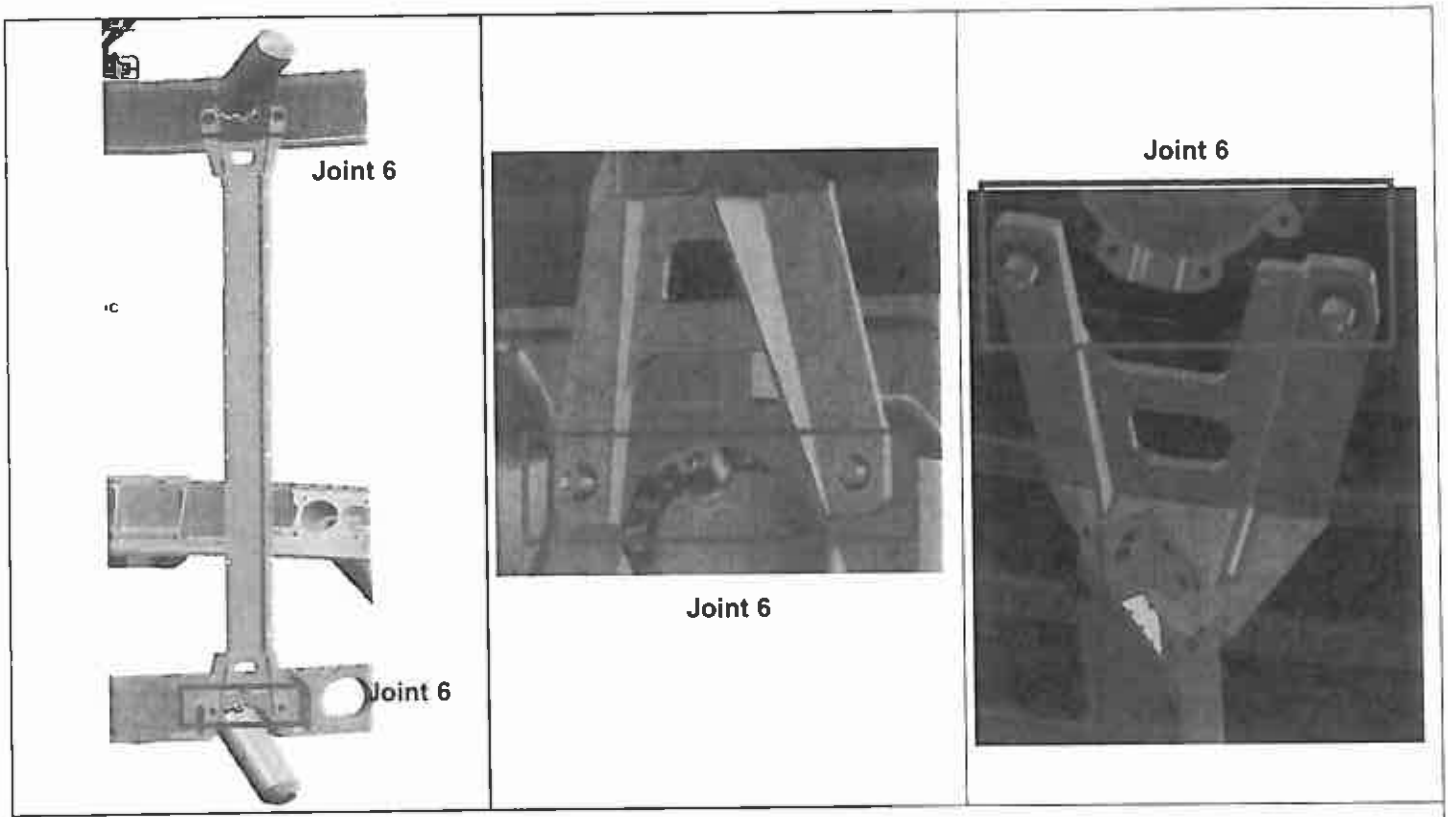

Figure 8-64: Joint 6

Next images show the forces on Joint 6 bolts (worst cases).

Questo documento contiene informazioni di proprietà di CARLO GAVAZZI SPACE SpA. Tutti i diritti sono riservati.
All information contained in this document are property of CARLO GAVAZZI SPACE SpA. All right reserved.

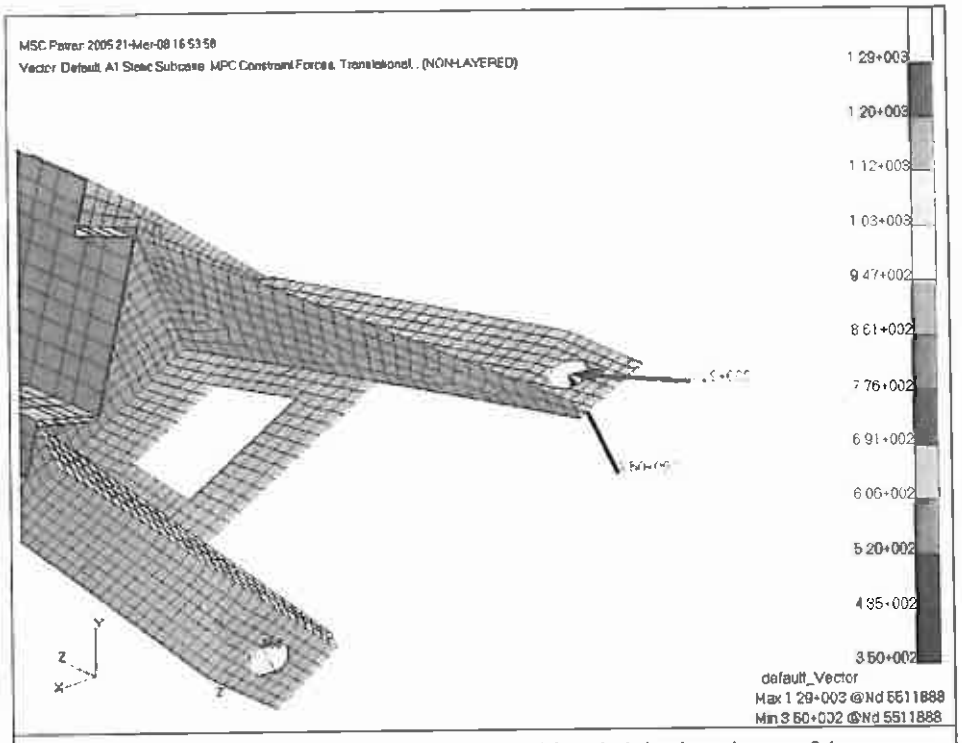

Figure 8-65: Forces on JOINT 6 – Max Axial – Load case 01

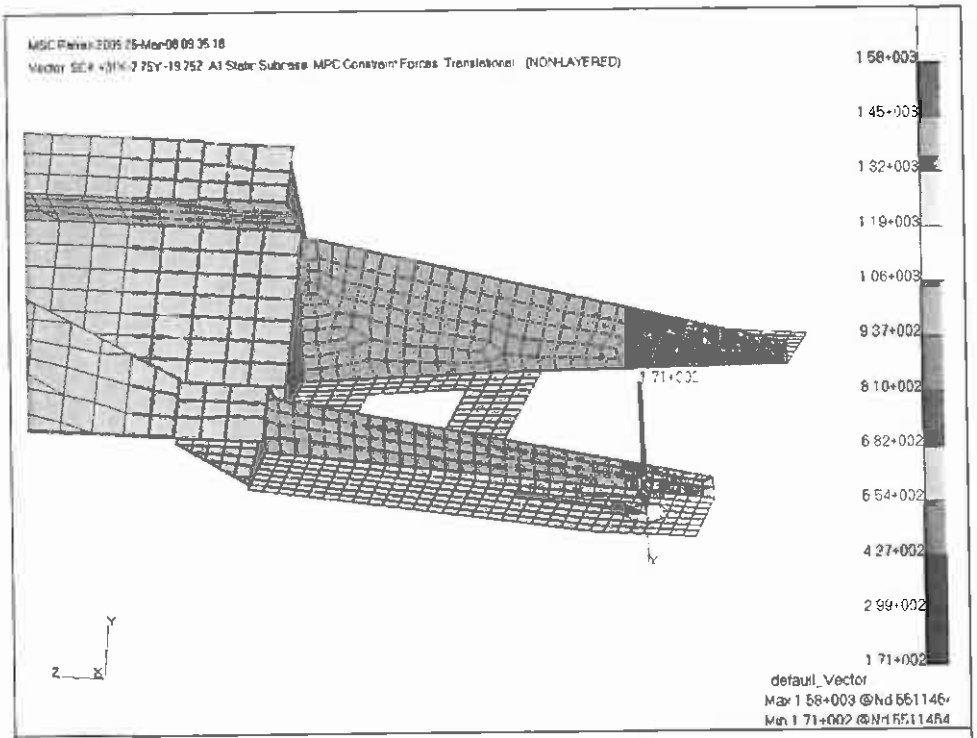

Figure 8-66: Forces on JOINT 6 – Max Shear and combined – Load case 04

In the following table input and output data are shown.

Questo documento contiene informazioni di proprietà di CARLO GAVAZZI SPACE SpA. Tutti i diritti sono riservati.
All information contained in this document are property of CARLO GAVAZZI SPACE SpA. All right reserved.

JUNCTION PROPERTIES	
BOLT	NAS1351 C6-20
WASHER 1	NAS1149-0663
WASHER 2	NA
NUT	NA
INSERT	MS51831-204
INSERT IN FLANGE	2
NUMBER OF FLANGES	2
LUBRICATED	YES
FLANGE 1 NAME	VSB SUPPORT
FLANGE 1 MATERIAL	AL 7075 T7351
FLANGE 1 MATERIAL SPEC	
FLANGE 1 THICKNESS [in]	0.236
FLANGE 1 HOLE DIAMETER [in]	0.375
FLANGE 2 NAME	VACUUM CASE I/F
FLANGE 2 MATERIAL	AL 7075 T7351
FLANGE 2 MATERIAL SPEC	
FLANGE 2 THICKNESS [in]	0.5
FLANGE 2 HOLE DIAMETER [in]	0.375
NOMINAL CONFIGURATION BOLT LOADS	
MAX AXIAL - CONFIGURATION ID	NOMINAL
MAX AXIAL - ELEMENT ID	5511888
MAX AXIAL - LOAD CASE ID	1
MAX AXIAL - AXIAL LOAD [N]	350.0
max axial - axial load [lb]	78.7
MAX AXIAL - SHEAR LOAD [N]	1287.5
max axial - shear load [lb]	289.5
MAX SHEAR - CONFIGURATION ID	NOMINAL
MAX SHEAR - ELEMENT ID	5511464
MAX SHEAR - LOAD CASE ID	4
MAX SHEAR - AXIAL LOAD [N]	171.3
max shear - axial load [lb]	38.5
MAX SHEAR - SHEAR LOAD [N]	1575.3
max shear - shear load [lb]	354.1
MAX COMBINED - CONFIGURATION ID	NOMINAL
MAX COMBINED - ELEMENT ID	SAME AS MAX SHEAR
MAX COMBINED - LOAD CASE ID	
MAX COMBINED - AXIAL LOAD [N]	
max combined - axial load [lb]	
MAX COMBINED - SHEAR LOAD [N]	
max combined - shear load [lb]	
WASHER DATA	
THICKNESS OF WASHER [in]	0.063
OUTER DIAMETER OF WASHER [in]	0.625
INNER DIAMETER OF WASHER [in]	0.39
BOLT HEAD DIAMETER [in]	0.562
FLANGE DATA	
THICK OF FLANGE 1 [in]	0.236
THICK OF FLANGE 2 [in]	0.5
DIAMETER OF HOLE [in]	0.375

BOLT MATERIAL PROPERTY DATA	
TEMP FACTOR FOR ULTIMATE STRENGHT	0.94
TEMP FACTOR FOR YIELD STRENGHT	0.94
ULTIMATE TENSILE ALLOWABLE STRESS [ksi]	80
YIELD TENSILE ALLOWABLE STRESS [ksi]	80
TEMP FACTOR FOR MODULUS	0.94
MODULUS OF ELASTICITY [ksi]	29100
THERMAL COEFF - HOT [1E(-6)/deg]	9.1
THERMAL COEFF - COLD [1E(-6)/deg]	7.8
INSERT MATERIAL PROPERTY DATA	
TEMP FACTOR FOR ULTIMATE STRENGHT	0.94
ULTIMATE TENSILE ALLOWABLE STRESS [ksi]	160000
NUT MATERIAL PROPERTY DATA	
TEMP FACTOR FOR ULTIMATE STRENGHT	NA
TENSILE ULTIMATE ALLOWABLE STRESS [psi]	NA
ULTIMATE AXIAL LOAD [lb]	NA
WASHER MATERIAL PROPERTY DATA	
TEMP FACTOR FOR MODULUS	1
MODULUS OF ELASTICITY [ksi]	29100
FLANGE MATERIAL PROPERTY DATA	
TEMP FACTOR FOR MODULUS OF FLANGE 1	1
TEMP FACTOR FOR MODULUS OF FLANGE 2	1
TEMP FACTOR FOR ULTIMATE STRENGHT OF FLANGE 2	0.94
ULTIMATE SHEAR ALLOWABLE STRESS OF FLANGE 2 [psi]	37999.69
MODULUS OF ELASTICITY FOR FLANGE 1 [ksi]	10500
MODULUS OF ELASTICITY FOR FLANGE 2 [ksi]	10500
THERMAL COEFF OF FLANGE 1 - HOT [1E(-6)/deg]	12.15
THERMAL COEFF OF FLANGE 1 - COLD [1E(-6)/deg]	11.5
THERMAL COEFF OF FLANGE 2 - HOT [1E(-6)/deg]	12.15
THERMAL COEFF OF FLANGE 2 - COLD [1E(-6)/deg]	11.5
ULTIMATE BEARING ALLOWABLE STRESS FOR FLANGE 1 [psi]	102000
YIELD BEARING ALLOWABLE STRESS FOR FLANGE 1 [psi]	79000
ULTIMATE BEARING ALLOWABLE STRESS FOR FLANGE 2 [psi]	102000
YIELD BEARING ALLOWABLE STRESS FOR FLANGE 2 [psi]	79000
TORQUE AND PRELOAD DATA	
MAX TORQUE [lb in]	179.0
max torque [N m]	20.2
MIN TORQUE [lb in]	151.0
min torque [N m]	17.1
COEFFICIENT OF UTILIZATION [%]	73.7
LADING PLANE FACTOR	0.5
PRELOAD UNCETRAINTY	0.25
TORQUE COEFFICIENT	0.15
NOMINAL CONFIGURATION SUMMARY OF MARGINS FOR BOLTS	
MOS CALCULATION - CONFIGURATION ID	NOMINAL
JOINT SEPARATION	13.3 (MAX AXIAL)
DIRECT TENSION ULTIMATE	35.49 (MAX AXIAL)
DIRECT TENSION YIELD	42.79 (MAX AXIAL)
TOTAL TENSION ULTIMATE	0.79 (MAX AXIAL)
TOTAL TENSION YIELD	0.349 (MAX AXIAL)
DIRECT THREAD SHEAR ULTIMATE	51.77 (MAX AXIAL)
TOTAL THREAD SHEAR ULTIMATE	1.59 (MAX AXIAL)
SHEAR ULTIMATE	3.48 (MAX SHEAR)
BENDING ULTIMATE	> 10
COMBINED SHEAR, TENSION AND BENDING ULTIMATE	0.747 (MAX SHEAR)
NOMINAL CONFIGURATION MINIMUM MOS	0.747
NOMINAL CONFIGURATION MINIMUM ULTIMATE MOS	0.747
NOMINAL CONFIGURATION SUMMARY OF MARGINS FOR BEARING FLANGES	
FLANGE 1 - BEARING ULTIMATE	10.08
FLANGE 1 - BEARING YIELD	12.73
FLANGE 2 - BEARING ULTIMATE	22.48
FLANGE 2 - BEARING YIELD	28.10
NOMINAL CONFIGURATION MINIMUM MOS	FLANGE 1 - BEARING ULTIMATE

Table 8-18: JOINT 6 – nominal configuration

Questo documento contiene informazioni di proprietà di CARLO GAVAZZI SPACE SpA. Tutti i diritti sono riservati.
All information contained in this document are property of CARLO GAVAZZI SPACE SpA. All right reserved.

8.2.3.7 JOINT 7: VSB BODY / LHP VSB BKT (NOMINAL CONF.)

VSB BODY / LHP VSB BKT Joint 7 are NAS1351C08-6 bolts made of stainless steel A286-80 ksi.
Next image shows the bolt location.

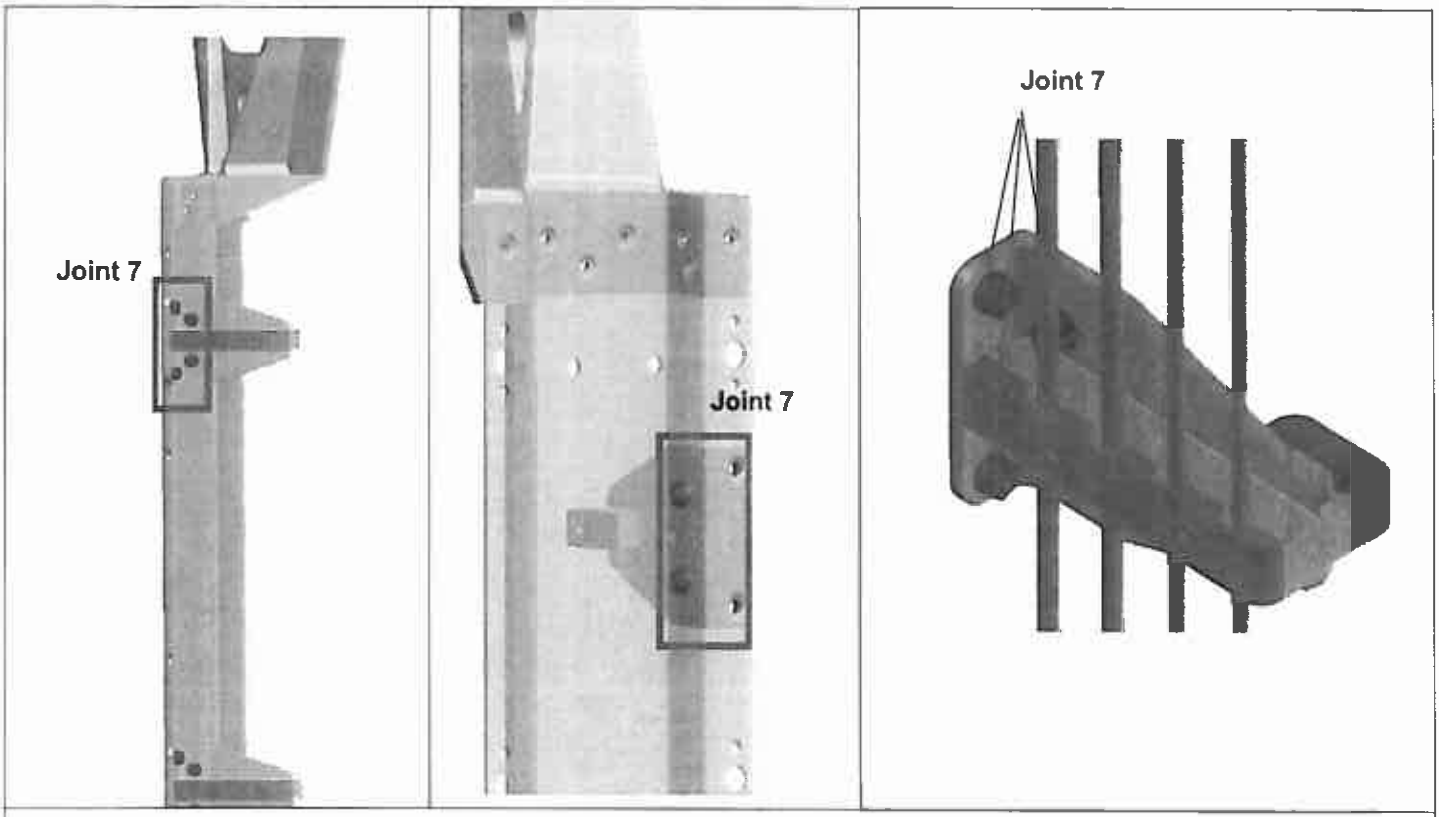

Figure 8-67: Joint 7

Next images show the forces on Joint 7 bolts (worst cases).

Questo documento contiene informazioni di proprietà di CARLO GAVAZZI SPACE SpA. Tutti i diritti sono riservati.
All information contained in this document are property of CARLO GAVAZZI SPACE SpA. All right reserved.

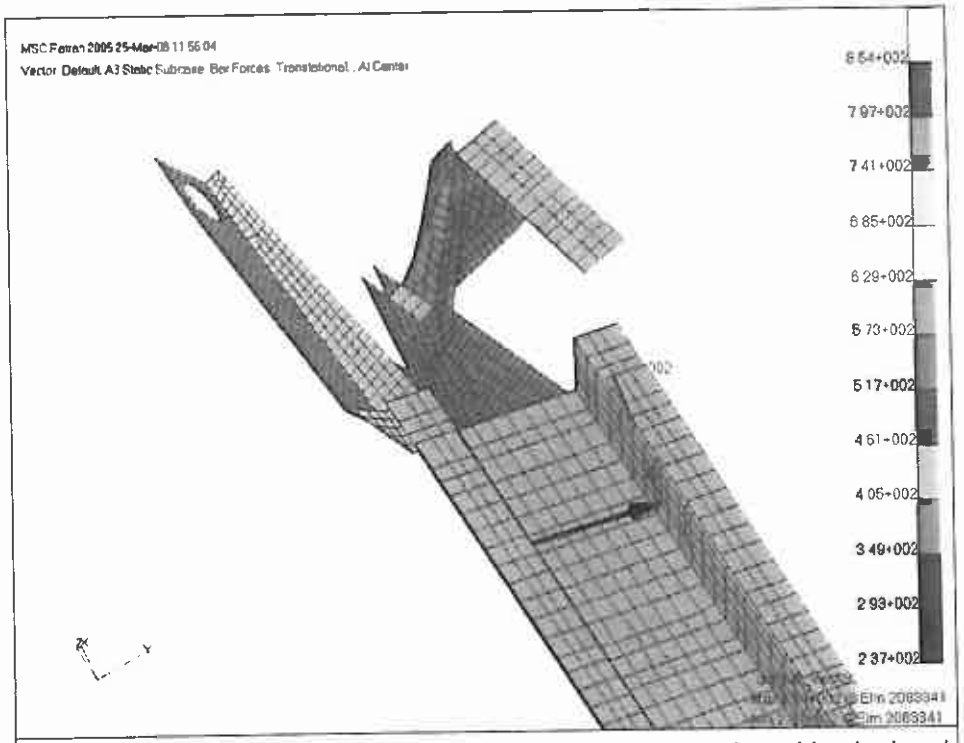

Figure 8-68: Forces on JOINT 7 – Max Axial, Max Shear and combined – Load case 29

In the following table input and output data are shown.

Questo documento contiene informazioni di proprietà di CARLO GAVAZZI SPACE SpA. Tutti i diritti sono riservati.
All information contained in this document are property of CARLO GAVAZZI SPACE SpA. All right reserved.

JUNCTION PROPERTIES	
BOLT	NAS1352C08-6
WASHER 1	NAS620C8L
WASHER 2	NA
NUT	MS1291C08M
INSERT	NA
INSERT IN FLANGE	NA
NUMBER OF FLANGES	2
LUBRICATED	NO
FLANGE 1 NAME	LATERAL BKT
FLANGE 1 MATERIAL	PEEK
FLANGE 1 MATERIAL SPEC	
FLANGE 1 THICKNESS [in]	0.118
FLANGE 1 HOLE DIAMETER [in]	0.164
FLANGE 2 NAME	VSB
FLANGE 2 MATERIAL	CFRP
FLANGE 2 MATERIAL SPEC	
FLANGE 2 THICKNESS [in]	0.079
FLANGE 2 HOLE DIAMETER [in]	0.164
NOMINAL CONFIGURATION BOLT LOADS	
MAX AXIAL - CONFIGURATION ID	NOMINAL
MAX AXIAL - ELEMENT ID	2083341
MAX AXIAL - LOAD CASE ID	29
MAX AXIAL - AXIAL LOAD [N]	236.9
max axial - axial load [lb]	53.2
MAX AXIAL - SHEAR LOAD [N]	853.6
max axial - shear load [lb]	191.9
MAX SHEAR - CONFIGURATION ID	NOMINAL
MAX SHEAR - ELEMENT ID	SAME AS MAX AXIAL
MAX SHEAR - LOAD CASE ID	
MAX SHEAR - AXIAL LOAD [N]	
max shear - axial load [lb]	
MAX SHEAR - SHEAR LOAD [N]	
max shear - shear load [lb]	
MAX COMBINED - CONFIGURATION ID	NOMINAL
MAX COMBINED - ELEMENT ID	SAME AS MAX AXIAL
MAX COMBINED - LOAD CASE ID	
MAX COMBINED - AXIAL LOAD [N]	
max combined - axial load [lb]	
MAX COMBINED - SHEAR LOAD [N]	
max combined - shear load [lb]	
WASHER DATA	
THICKNESS OF WASHER [in]	0.016
OUTER DIAMETER OF WASHER [in]	0.304
INNER DIAMETER OF WASHER [in]	0.169
BOLT HEAD DIAMETER [in]	0.27
FLANGE DATA	
THICK OF FLANGE 1 [in]	0.118
THICK OF FLANGE 2 [in]	0.079
DIAMETER OF HOLE [in]	0.164

BOLT MATERIAL PROPERTY DATA	
TEMP FACTOR FOR ULTIMATE STRENGHT	0.94
TEMP FACTOR FOR YIELD STRENGHT	0.94
ULTIMATE TENSILE ALLOWABLE STRESS [ksi]	80
YIELD TENSILE ALLOWABLE STRESS [ksi]	60
TEMP FACTOR FOR MODULUS	0.94
MODULUS OF ELASTICITY [ksi]	29100
THERMAL COEFF - HOT [1E(-6)/deg]	9.1
THERMAL COEFF - COLD [1E(-6)/deg]	7.8
INSERT MATERIAL PROPERTY DATA	
TEMP FACTOR FOR ULTIMATE STRENGHT	NA
ULTIMATE TENSILE ALLOWABLE STRESS [ksi]	NA
NUT MATERIAL PROPERTY DATA	
TEMP FACTOR FOR ULTIMATE STRENGHT	0.94
TENSILE ULTIMATE ALLOWABLE STRESS [psi]	125000
ULTIMATE AXIAL LOAD [lb]	1720
WASHER MATERIAL PROPERTY DATA	
TEMP FACTOR FOR MODULUS	1
MODULUS OF ELASTICITY [ksi]	29100
FLANGE MATERIAL PROPERTY DATA	
TEMP FACTOR FOR MODULUS OF FLANGE 1	1
TEMP FACTOR FOR MODULUS OF FLANGE 2	1
TEMP FACTOR FOR ULTIMATE STRENGHT OF FLANGE 2	NA
ULTIMATE SHEAR ALLOWABLE STRESS OF FLANGE 2 [psi]	NA
MODULUS OF ELASTICITY FOR FLANGE 1 [ksi]	6300
MODULUS OF ELASTICITY FOR FLANGE 2 [ksi]	9000
THERMAL COEFF OF FLANGE 1 - HOT [1E(-6)/deg]	46
THERMAL COEFF OF FLANGE 1 - COLD [1E(-6)/deg]	46
THERMAL COEFF OF FLANGE 2 - HOT [1E(-6)/deg]	1
THERMAL COEFF OF FLANGE 2 - COLD [1E(-6)/deg]	1
ULTIMATE BEARING ALLOWABLE STRESS FOR FLANGE 1 [psi]	20000
YIELD BEARING ALLOWABLE STRESS FOR FLANGE 1 [psi]	NA
ULTIMATE BEARING ALLOWABLE STRESS FOR FLANGE 2 [psi]	60000
YIELD BEARING ALLOWABLE STRESS FOR FLANGE 2 [psi]	NA
TORQUE AND PRELOAD DATA	
MAX TORQUE [lb in]	13.0
max torque [N m]	1.5
MIN TORQUE [lb in]	10.0
min torque [N m]	1.1
COEFFICIENT OF UTILIZATION [%]	60.597
LADING PLANE FACTOR	0.5
PRELOAD UNCETRAINTY	0.35
TORQUE COEFFICIENT	0.2
NOMINAL CONFIGURATION SUMMARY OF MARGINS FOR BOLTS	
MOS CALCULATION - CONFIGURATION ID	NOMINAL
JOINT SEPARATION	1.83 (MAX AXIAL)
DIRECT TENSION ULTIMATE	7.59 (MAX AXIAL)
DIRECT TENSION YIELD	9.31 (MAX AXIAL)
TOTAL TENSION ULTIMATE	0.62 (MAX AXIAL)
TOTAL TENSION YIELD	0.25 (MAX AXIAL)
DIRECT THREAD SHEAR ULTIMATE	9.31 (MAX AXIAL)
TOTAL THREAD SHEAR ULTIMATE	0.94 (MAX AXIAL)
SHEAR ULTIMATE	0.22 (MAX AXIAL)
BENDING ULTIMATE	> 10
COMBINED SHEAR, TENSION AND BENDING ULTIMATE	0.03 (MAX AXIAL)
NOMINAL CONFIGURATION MINIMUM MOS	0.03
NOMINAL CONFIGURATION MINIMUM ULTIMATE MOS	0.03
NOMINAL CONFIGURATION SUMMARY OF MARGINS FOR BEARING FLANGES	
FLANGE 1 - BEARING ULTIMATE	-0.12
FLANGE 1 - BEARING YIELD	NA
FLANGE 2 - BEARING ULTIMATE	1.35
FLANGE 2 - BEARING YIELD	NA
NOMINAL CONFIGURATION MINIMUM MOS	FLANGE 1 - BEARING ULTIMATE

Table 8-19: JOINT 7 – nominal configuration

Questo documento contiene informazioni di proprietà di CARLO GAVAZZI SPACE SpA. Tutti i diritti sono riservati.
All information contained in this document are property of CARLO GAVAZZI SPACE SpA. All right reserved.

8.2.3.8 JOINT 8: VSB SUPPORTS/ LHP VSB STAND-OFF JOINT (NOMINAL CONF.)

VSB SUPPORTS/ LHP VSB STAND-OFF Joint 8 are DIN 912 M5x12 bolts made of stainless steel A2-70.
Next image shows the bolt location.

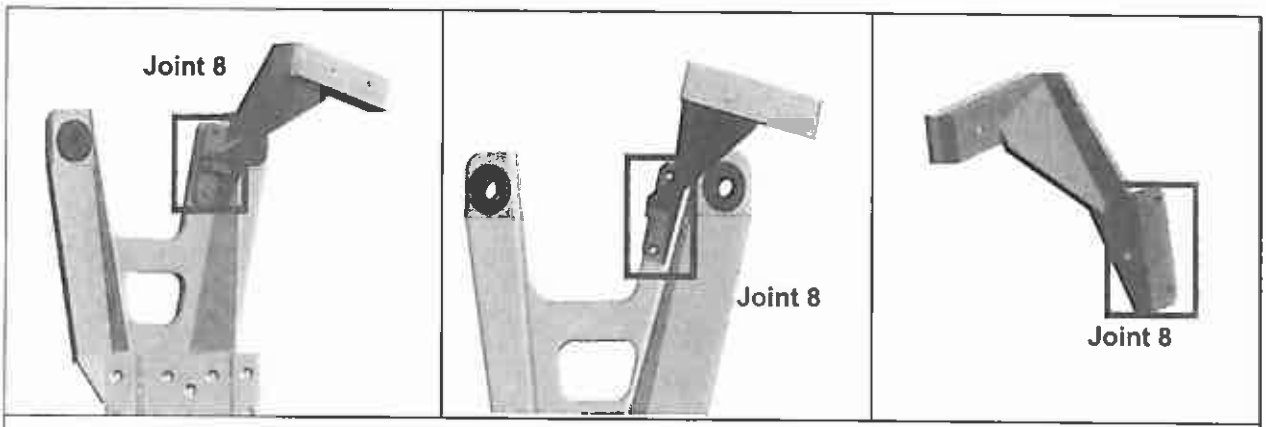

Figure 8-69: Joint 8

Next images show the forces on Joint 8 bolts (worst cases).

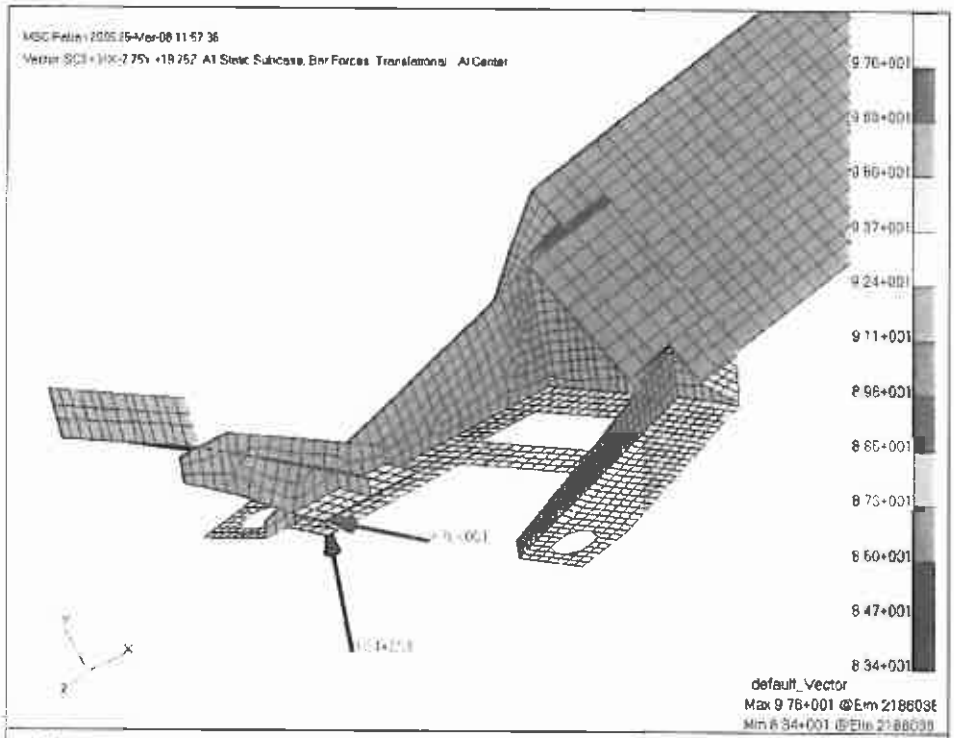

Figure 8-70: Forces on JOINT 8 – Max Axial and combined – Load case 03

Questo documento contiene informazioni di proprietà di CARLO GAVAZZI SPACE SpA. Tutti i diritti sono riservati.
All information contained in this document are property of CARLO GAVAZZI SPACE SpA. All right reserved.

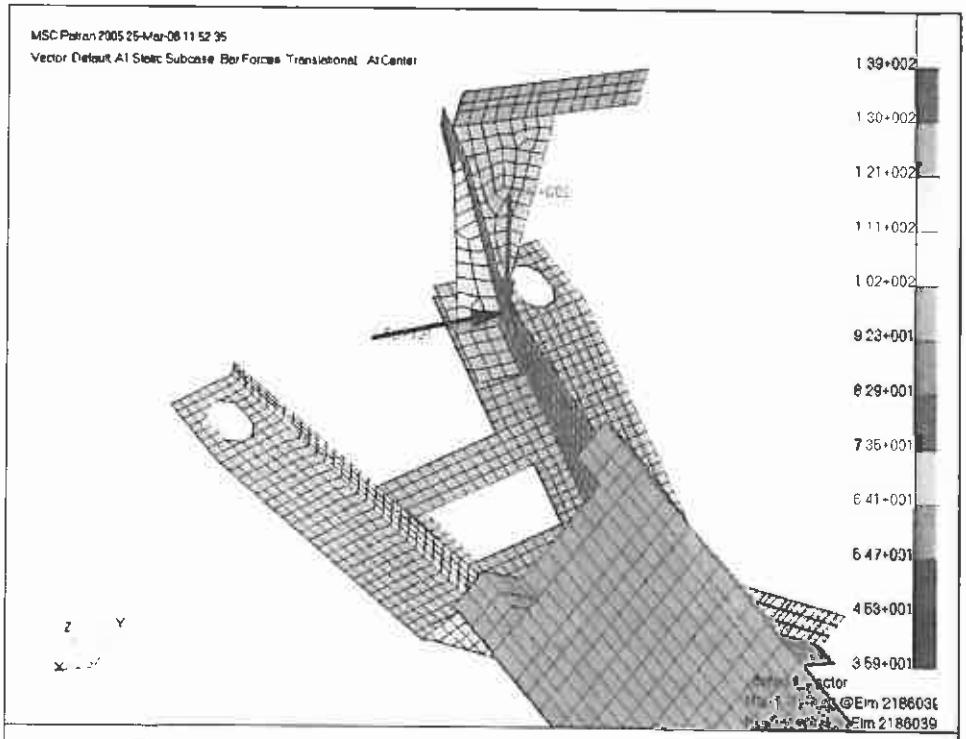

Figure 8-71: Forces on JOINT 8 – Max Shear– Load case 01

In the following table input and output data are shown.

Questo documento contiene informazioni di proprietà di CARLO GAVAZZI SPACE SpA. Tutti i diritti sono riservati.
All information contained in this document are property of CARLO GAVAZZI SPACE SpA. All right reserved.

JUNCTION PROPERTIES	
BOLT	DIN 912 M5x12
WASHER 1	DIN 125A-M5
WASHER 2	NA
NUT	NA
INSERT	LN9499 M5x1d
INSERT IN FLANGE	2
NUMBER OF FLANGES	2
LUBRICATED	NO
FLANGE 1 NAME	VSB
FLANGE 1 MATERIAL	PEEK
FLANGE 1 MATERIAL SPEC	
FLANGE 1 THICKNESS [in]	0.197
FLANGE 1 HOLE DIAMETER [in]	0.2
FLANGE 2 NAME	VSB1 STAND OFF
FLANGE 2 MATERIAL	AL 7075 T7351
FLANGE 2 MATERIAL SPEC	
FLANGE 2 THICKNESS [in]	0.236
FLANGE 2 HOLE DIAMETER [in]	0.2
NOMINAL CONFIGURATION BOLT LOADS	
MAX AXIAL - CONFIGURATION ID	NOMINAL
MAX AXIAL - ELEMENT ID	2186038
MAX AXIAL - LOAD CASE ID	3
MAX AXIAL - AXIAL LOAD [N]	83 4
max axial - axial load [lb]	18 7
MAX AXIAL - SHEAR LOAD [N]	97.6
max axial - shear load [lb]	21.9
MAX SHEAR - CONFIGURATION ID	NOMINAL
MAX SHEAR - ELEMENT ID	2186039
MAX SHEAR - LOAD CASE ID	1
MAX SHEAR - AXIAL LOAD [N]	35.9
max shear - axial load [lb]	8.1
MAX SHEAR - SHEAR LOAD [N]	139 4
max shear - shear load [lb]	31.3
MAX COMBINED - CONFIGURATION ID	NOMINAL
MAX COMBINED - ELEMENT ID	SAME AS MAX AXIAL
MAX COMBINED - LOAD CASE ID	
MAX COMBINED - AXIAL LOAD [N]	
max combined - axial load [lb]	
MAX COMBINED - SHEAR LOAD [N]	
max combined - shear load [lb]	
WASHER DATA	
THICKNESS OF WASHER [in]	0.039
OUTER DIAMETER OF WASHER [in]	0.394
INNER DIAMETER OF WASHER [in]	0.21
BOLT HEAD DIAMETER [in]	0 335
FLANGE DATA	
THICK OF FLANGE 1 [in]	0.197
THICK OF FLANGE 2 [in]	0.236
DIAMETER OF HOLE [in]	0.2

BOLT MATERIAL PROPERTY DATA	
TEMP FACTOR FOR ULTIMATE STRENGHT	0 94
TEMP FACTOR FOR YIELD STRENGHT	0 94
ULTIMATE TENSILE ALLOWABLE STRESS [ksi]	101 526
YIELD TENSILE ALLOWABLE STRESS [ksi]	65 257
TEMP FACTOR FOR MODULUS	0 94
MODULUS OF ELASTICITY [ksi]	29100
THERMAL COEFF - HOT [1E(-6)/deg]	8 7
THERMAL COEFF - COLD [1E(-6)/deg]	8 5
INSERT MATERIAL PROPERTY DATA	
TEMP FACTOR FOR ULTIMATE STRENGHT	1
ULTIMATE TENSILE ALLOWABLE STRESS [ksi]	115
NUT MATERIAL PROPERTY DATA	
TEMP FACTOR FOR ULTIMATE STRENGHT	NA
TENSILE ULTIMATE ALLOWABLE STRESS [psi]	NA
ULTIMATE AXIAL LOAD [lb]	NA
WASHER MATERIAL PROPERTY DATA	
TEMP FACTOR FOR MODULUS	1
MODULUS OF ELASTICITY [ksi]	29100
FLANGE MATERIAL PROPERTY DATA	
TEMP FACTOR FOR MODULUS OF FLANGE 1	1
TEMP FACTOR FOR MODULUS OF FLANGE 2	1
TEMP FACTOR FOR ULTIMATE STRENGHT OF FLANGE 2	0 94
ULTIMATE SHEAR ALLOWABLE STRESS OF FLANGE 2 [psi]	37999 89
MODULUS OF ELASTICITY FOR FLANGE 1 [ksi]	6300
MODULUS OF ELASTICITY FOR FLANGE 2 [ksi]	10500
THERMAL COEFF OF FLANGE 1 - HOT [1E(-6)/deg]	46
THERMAL COEFF OF FLANGE 1 - COLD [1E(-6)/deg]	46
THERMAL COEFF OF FLANGE 2 - HOT [1E(-6)/deg]	12 15
THERMAL COEFF OF FLANGE 2 - COLD [1E(-6)/deg]	11 15
ULTIMATE BEARING ALLOWABLE STRESS FOR FLANGE 1 [psi]	20000
YIELD BEARING ALLOWABLE STRESS FOR FLANGE 1 [psi]	NA
ULTIMATE BEARING ALLOWABLE STRESS FOR FLANGE 2 [psi]	102000
YIELD BEARING ALLOWABLE STRESS FOR FLANGE 2 [psi]	79000
TORQUE AND PRELOAD DATA	
MAX TORQUE [lb in]	20 0
max torque [N m]	2 3
MIN TORQUE [lb in]	17 0
min torque [N m]	1 9
COEFFICIENT OF UTILIZATION [%]	70 676
LADING PLANE FACTOR	0 5
PRELOAD UNCETRAINTY	0 35
TORQUE COEFFICIENT	0 2
NOMINAL CONFIGURATION SUMMARY OF MARGINS FOR BOLTS	
MOS CALCULATION - CONFIGURATION ID	NOMINAL
JOINT SEPARATION	8 56 (MAX AXIAL)
DIRECT TENSION ULTIMATE	43 13 (MAX AXIAL)
DIRECT TENSION YIELD	44 39 (MAX AXIAL)
TOTAL TENSION ULTIMATE	1 18 (MAX AXIAL)
TOTAL TENSION YIELD	0 398 (MAX AXIAL)
DIRECT THREAD SHEAR ULTIMATE	62 91 (MAX AXIAL)
TOTAL THREAD SHEAR ULTIMATE	2 13 (MAX AXIAL)
SHEAR ULTIMATE	12 9 (MAX SHEAR)
BENDING ULTIMATE	> 10
COMBINED SHEAR, TENSION AND BENDING ULTIMATE	1 158 (MAX AXIAL)
NOMINAL CONFIGURATION MINIMUM MOS	0 398
NOMINAL CONFIGURATION MINIMUM ULTIMATE MOS	1 158
NOMINAL CONFIGURATION SUMMARY OF MARGINS FOR BEARING FLANGES	
FLANGE 1 - BEARING ULTIMATE	9 93
FLANGE 1 - BEARING YIELD	NA
FLANGE 2 - BEARING ULTIMATE	85 79
FLANGE 2 - BEARING YIELD	81 76
NOMINAL CONFIGURATION MINIMUM MOS	FLANGE 1 - BEARING ULTIMATE

Table 8-20: JOINT 8 – nominal configuration

Questo documento contiene informazioni di proprietà di CARLO GAVAZZI SPACE SpA. Tutti i diritti sono riservati.
All information contained in this document are property of CARLO GAVAZZI SPACE SpA. All right reserved.

8.2.3.9 JOINT 9: VSB BODY/VSB COVER (NOMINAL CONF.)

VSB BODY/VSB COVER Joint 9 are NAS1351C3-8 bolts made of stainless steel A286 – 80 ksi.
Next image shows the bolt location.

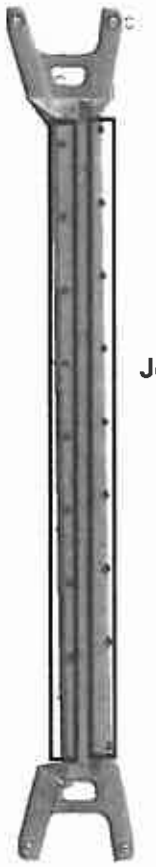

Figure 8-72: Joint 9

Next images show the forces on Joint 9 bolts (worst cases).

Questo documento contiene informazioni di proprietà di CARLO GAVAZZI SPACE SpA. Tutti i diritti sono riservati.
All information contained in this document are property of CARLO GAVAZZI SPACE SpA. All right reserved.

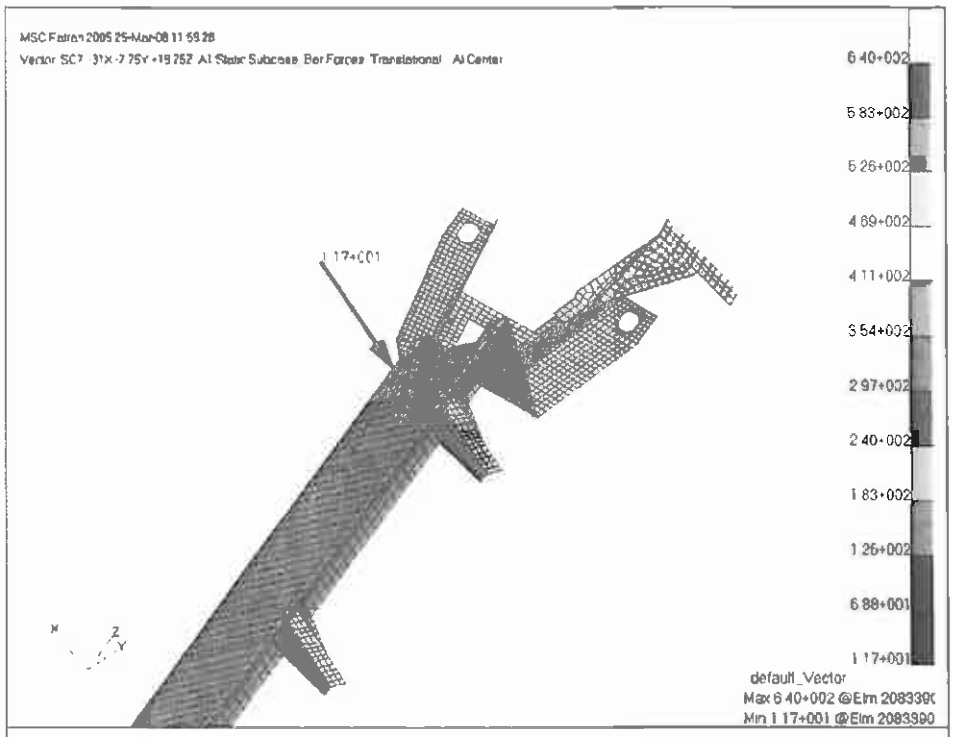

Figure 8-73: Forces on JOINT 9 – Max Axial – Load case 07

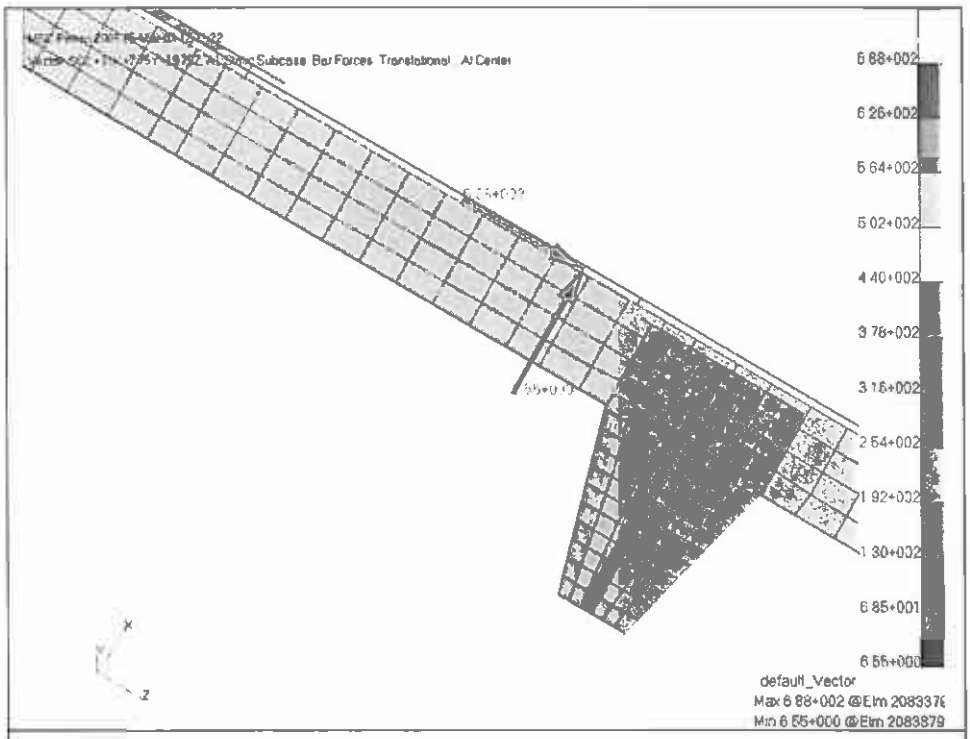

Figure 8-74: Forces on JOINT 9 – Max Shear and combined – Load case 02

In the following table input and output data are shown.

Questo documento contiene informazioni di proprietà di CARLO GAVAZZI SPACE SpA. Tutti i diritti sono riservati.
All information contained in this document are property of CARLO GAVAZZI SPACE SpA. All right reserved.

JUNCTION PROPERTIES	
BOLT	NAS1351C3-8
WASHER 1	NAS620C416
WASHER 2	NA
NUT	MS21060-L3
INSERT	NA
INSERT IN FLANGE	NA
NUMBER OF FLANGES	2
LUBRICATED	NO
FLANGE 1 NAME	VSB
FLANGE 1 MATERIAL	CFRP
FLANGE 1 MATERIAL SPEC	
FLANGE 1 THICKNESS [in]	0.079
FLANGE 1 HOLE DIAMETER [in]	0.19
FLANGE 2 NAME	BEAM ASSY
FLANGE 2 MATERIAL	CFRP
FLANGE 2 MATERIAL SPEC	
FLANGE 2 THICKNESS [in]	0.079
FLANGE 2 HOLE DIAMETER [in]	0.19
NOMINAL CONFIGURATION BOLT LOADS	
MAX AXIAL - CONFIGURATION ID	NOMINAL
MAX AXIAL - ELEMENT ID	2083390
MAX AXIAL - LOAD CASE ID	7
MAX AXIAL - AXIAL LOAD [N]	11.7
max axial - axial load [lb]	2 6
MAX AXIAL - SHEAR LOAD [N]	639 9
max axial - shear load [lb]	143 8
MAX SHEAR - CONFIGURATION ID	NOMINAL
MAX SHEAR - ELEMENT ID	2083379
MAX SHEAR - LOAD CASE ID	2
MAX SHEAR - AXIAL LOAD [N]	6 6
max shear - axial load [lb]	1 5
MAX SHEAR - SHEAR LOAD [N]	688.1
max shear - shear load [lb]	154 7
MAX COMBINED - CONFIGURATION ID	NOMINAL
MAX COMBINED - ELEMENT ID	SAME AS MAX SHEAR
MAX COMBINED - LOAD CASE ID	
MAX COMBINED - AXIAL LOAD [N]	
max combined - axial load [lb]	
MAX COMBINED - SHEAR LOAD [N]	
max combined - shear load [lb]	
WASHER DATA	
THICKNESS OF WASHER [in]	0.063
OUTER DIAMETER OF WASHER [in]	0.468
INNER DIAMETER OF WASHER [in]	0.255
BOLT HEAD DIAMETER [in]	0.312
FLANGE DATA	
THICK OF FLANGE 1 [in]	0.079
THICK OF FLANGE 2 [in]	0.079
DIAMETER OF HOLE [in]	0.19

BOLT MATERIAL PROPERTY DATA	
TEMP FACTOR FOR ULTIMATE STRENGHT	0 94
TEMP FACTOR FOR YIELD STRENGHT	0 94
ULTIMATE TENSILE ALLOWABLE STRESS [ksi]	80
YIELD TENSILE ALLOWABLE STRESS [ksi]	60
TEMP FACTOR FOR MODULUS	0 94
MODULUS OF ELASTICITY [ksi]	29100
THERMAL COEFF - HOT [1E(-6)/deg]	9 1
THERMAL COEFF - COLD [1E(-6)/deg]	7 8
INSERT MATERIAL PROPERTY DATA	
TEMP FACTOR FOR ULTIMATE STRENGHT	NA
ULTIMATE TENSILE ALLOWABLE STRESS [ksi]	NA
NUT MATERIAL PROPERTY DATA	
TEMP FACTOR FOR ULTIMATE STRENGHT	0 94
TENSILE ULTIMATE ALLOWABLE STRESS [psi]	125000
ULTIMATE AXIAL LOAD [lb]	8470
WASHER MATERIAL PROPERTY DATA	
TEMP FACTOR FOR MODULUS	1
MODULUS OF ELASTICITY [ksi]	29100
FLANGE MATERIAL PROPERTY DATA	
TEMP FACTOR FOR MODULUS OF FLANGE 1	1
TEMP FACTOR FOR MODULUS OF FLANGE 2	1
TEMP FACTOR FOR ULTIMATE STRENGHT OF FLANGE 2	NA
ULTIMATE SHEAR ALLOWABLE STRESS OF FLANGE 2 [psi]	NA
MODULUS OF ELASTICITY FOR FLANGE 1 [ksi]	9000
MODULUS OF ELASTICITY FOR FLANGE 2 [ksi]	9000
THERMAL COEFF OF FLANGE 1 - HOT [1E(-6)/deg]	1
THERMAL COEFF OF FLANGE 1 - COLD [1E(-6)/deg]	1
THERMAL COEFF OF FLANGE 2 - HOT [1E(-6)/deg]	1
THERMAL COEFF OF FLANGE 2 - COLD [1E(-6)/deg]	1
ULTIMATE BEARING ALLOWABLE STRESS FOR FLANGE 1 [psi]	80000
YIELD BEARING ALLOWABLE STRESS FOR FLANGE 1 [psi]	NA
ULTIMATE BEARING ALLOWABLE STRESS FOR FLANGE 2 [psi]	80000
YIELD BEARING ALLOWABLE STRESS FOR FLANGE 2 [psi]	NA
TORQUE AND PRELOAD DATA	
MAX TORQUE [lb in]	19 0
max torque [N m]	2 1
MIN TORQUE [lb in]	18 0
min torque [N m]	2 0
COEFFICIENT OF UTILIZATION [%]	84 921
LADING PLANE FACTOR	0 5
PRELOAD UNCETRAINTY	0 35
TORQUE COEFFICIENT	0 2
NOMINAL CONFIGURATION SUMMARY OF MARGINS FOR BOLTS	
MOS CALCULATION - CONFIGURATION ID	NOMINAL
JOINT SEPARATION	41 8 (MAX AXIAL)
DIRECT TENSION ULTIMATE	241 12 (MAX AXIAL)
DIRECT TENSION YIELD	289 54 (MAX AXIAL)
TOTAL TENSION ULTIMATE	1.01 (MAX AXIAL)
TOTAL TENSION YIELD	0 5 (MAX AXIAL)
DIRECT THREAD SHEAR ULTIMATE	289 54 (MAX AXIAL)
TOTAL THREAD SHEAR ULTIMATE	1 41 (MAX AXIAL)
SHEAR ULTIMATE	1 22 (MAX SHEAR)
BENDING ULTIMATE	> 10
COMBINED SHEAR, TENSION AND BENDING ULTIMATE	0 59 (MAX SHEAR)
NOMINAL CONFIGURATION MINIMUM MOS	0 5
NOMINAL CONFIGURATION MINIMUM ULTIMATE MOS	0 59
NOMINAL CONFIGURATION SUMMARY OF MARGINS FOR BEARING FLANGES	
FLANGE 1 - BEARING ULTIMATE	2 38
FLANGE 1 - BEARING YIELD	NA
FLANGE 2 - BEARING ULTIMATE	2 38
FLANGE 2 - BEARING YIELD	NA
NOMINAL CONFIGURATION MINIMUM MOS	FLANGE 2 - BEARING ULTIMATE

Table 8-21: JOINT 9 – nominal configuration

Questo documento contiene informazioni di proprietà di CARLO GAVAZZI SPACE SpA. Tutti i diritti sono riservati.
All information contained in this document are property of CARLO GAVAZZI SPACE SpA. All right reserved.

8.2.3.10 JOINT 10: BIMETALLIC SUPPORT BKT/RADIATOR (NOMINAL CONF.)

BIMETALLIC SUPPORT BKT/RADIATOR Joint 10 are NAS1351N3LE12 bolts made of stainless steel A286 – 160ksi.
Next image shows the bolt location and numeration.

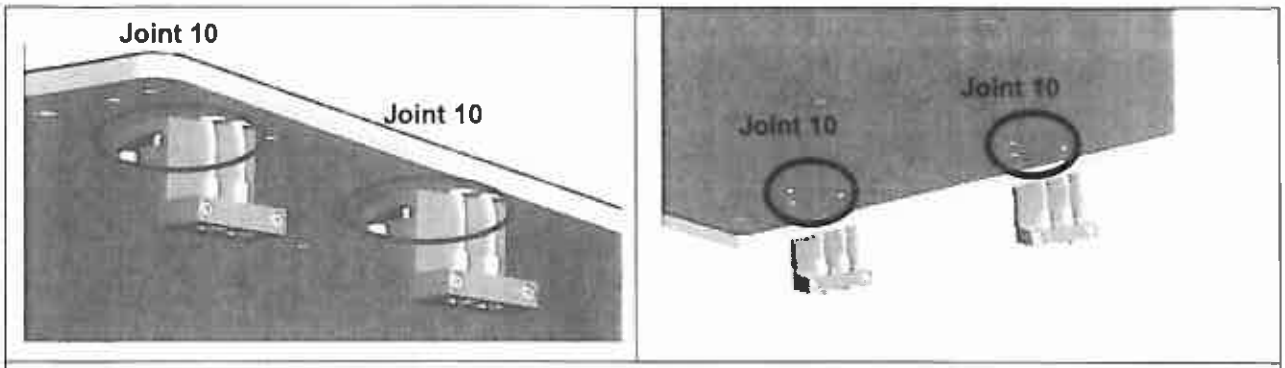

Figure 8-75: Joint 10

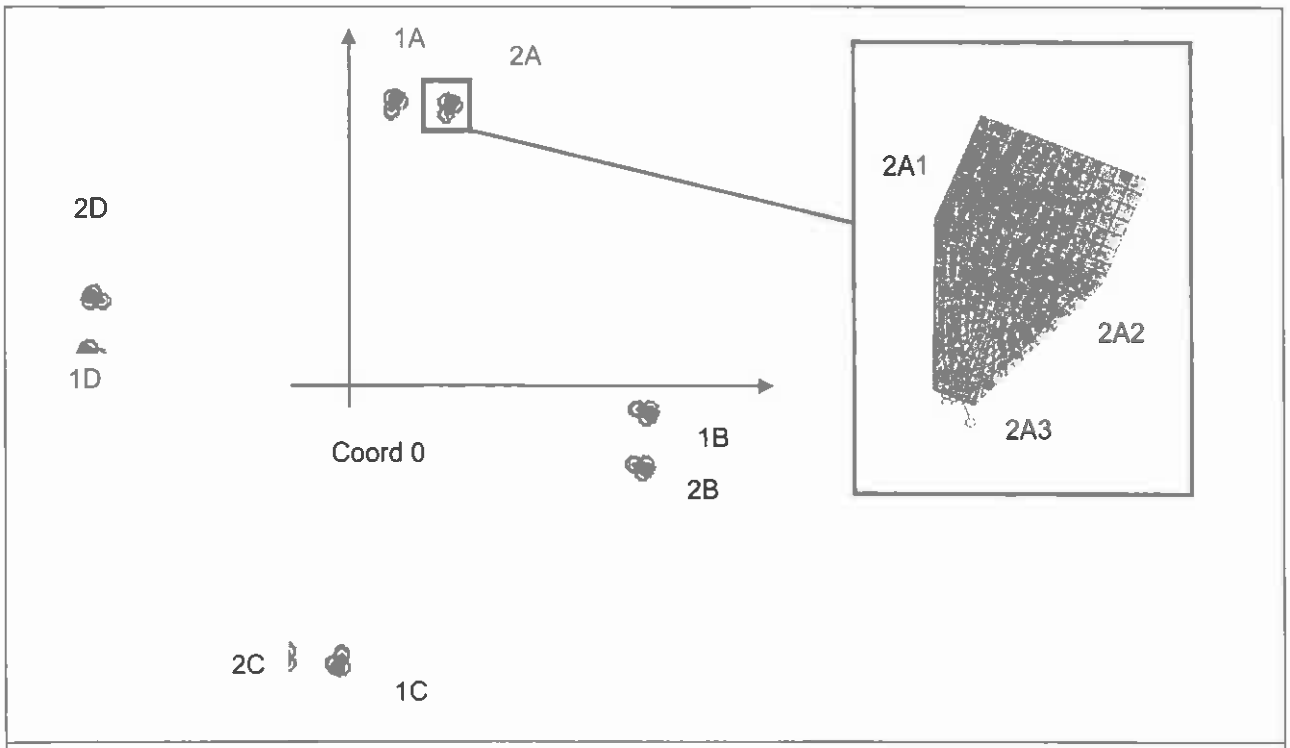

Figure 8-76: Joint 10 numeration pattern

Next images show the forces on Joint 10 bolts (worst cases). The resulting force has been considered to perform the analysis

Questo documento contiene informazioni di proprietà di CARLO GAVAZZI SPACE SpA. Tutti i diritti sono riservati.
All information contained in this document are property of CARLO GAVAZZI SPACE SpA. All right reserved.

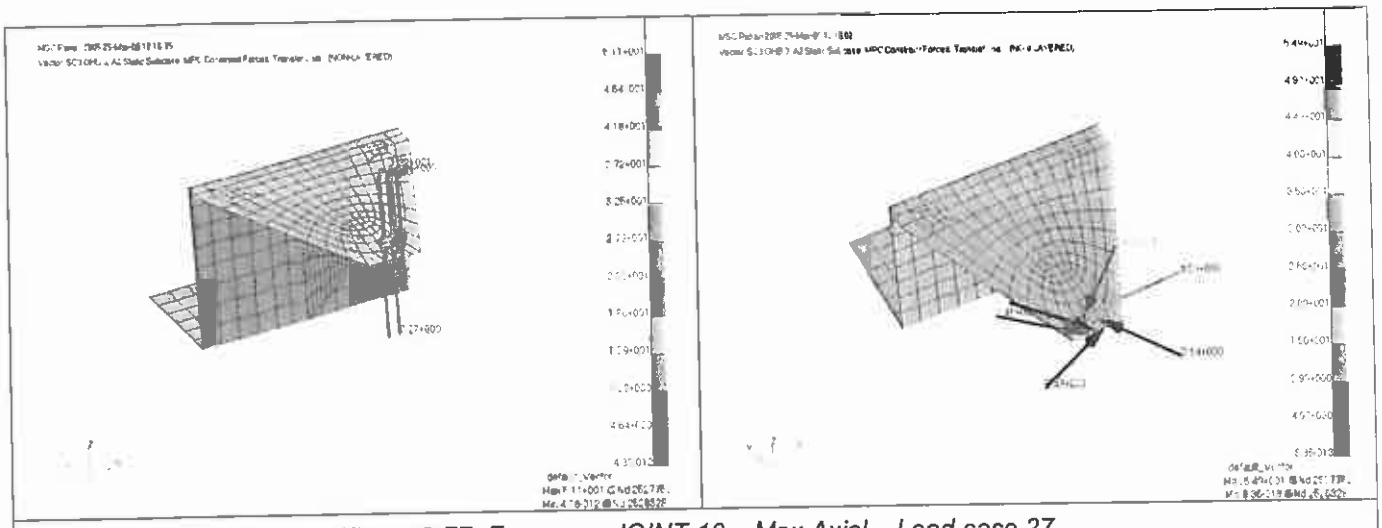

Figure 8-77: Forces on JOINT 10 – Max Axial – Load case 27

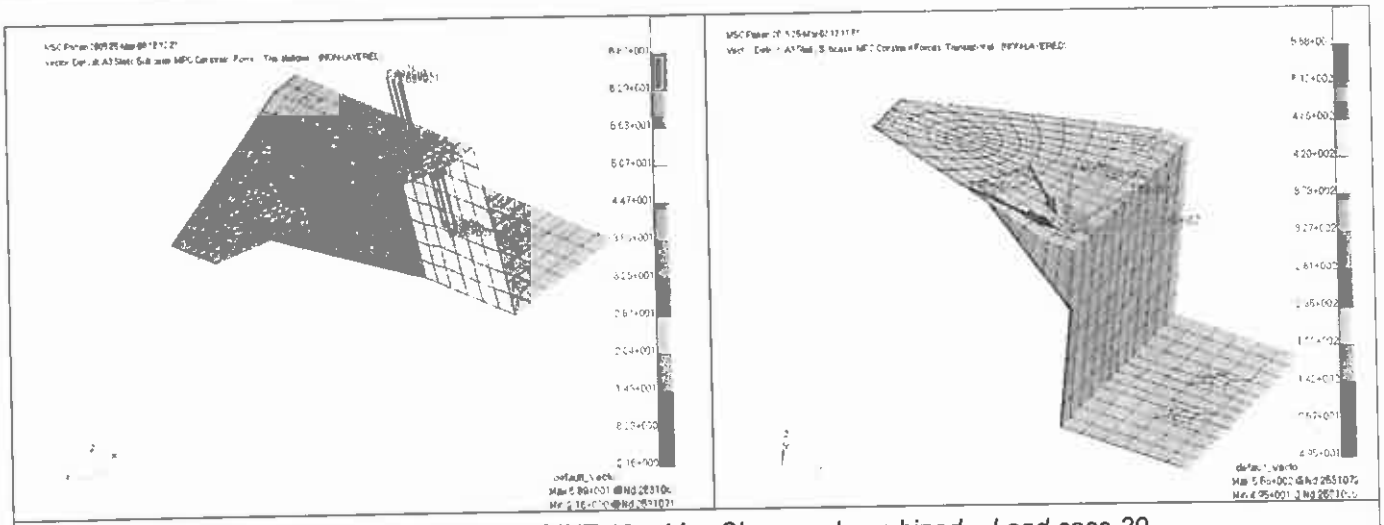

Figure 8-78: Forces on JOINT 10 – Max Shear and combined – Load case 29

In the following table input and output data are shown.

Questo documento contiene informazioni di proprietà di CARLO GAVAZZI SPACE SpA. Tutti i diritti sono riservati.
All information contained in this document are property of CARLO GAVAZZI SPACE SpA. All right reserved.

JUNCTION PROPERTIES	
BOLT	NAS1351N3LE12
WASHER 1	NAS620C10L
WASHER 2	NA
NUT	NA
INSERT	MS21209 F1-15L
INSERT IN FLANGE	2
NUMBER OF FLANGES	2
LUBRICATED	NO
FLANGE 1 NAME	BIMET BKT
FLANGE 1 MATERIAL	PEEK
FLANGE 1 MATERIAL SPEC	
FLANGE 1 THICKNESS [in]	0.236
FLANGE 1 HOLE DIAMETER [in]	0.21
FLANGE 2 NAME	ZR
FLANGE 2 MATERIAL	AL 7075 T7351
FLANGE 2 MATERIAL SPEC	
FLANGE 2 THICKNESS [in]	0.394
FLANGE 2 HOLE DIAMETER [in]	0.21
NOMINAL CONFIGURATION BOLT LOADS	
MAX AXIAL - CONFIGURATION ID	NOMINAL
MAX AXIAL - ELEMENT ID	1A1
MAX AXIAL - LOAD CASE ID	27
MAX AXIAL - AXIAL LOAD [N]	97.4
max axial - axial load [lb]	21.9
MAX AXIAL - SHEAR LOAD [N]	44.2
max axial - shear load [lb]	9.9
MAX SHEAR - CONFIGURATION ID	NOMINAL
MAX SHEAR - ELEMENT ID	2B2
MAX SHEAR - LOAD CASE ID	29
MAX SHEAR - AXIAL LOAD [N]	62.3
max shear - axial load [lb]	14.0
MAX SHEAR - SHEAR LOAD [N]	1691.6
max shear - shear load [lb]	380.3
MAX COMBINED - CONFIGURATION ID	NOMINAL
MAX COMBINED - ELEMENT ID	SAME AS MAX SHEAR
MAX COMBINED - LOAD CASE ID	
MAX COMBINED - AXIAL LOAD [N]	
max combined - axial load [lb]	
MAX COMBINED - SHEAR LOAD [N]	
max combined - shear load [lb]	
WASHER DATA	
THICKNESS OF WASHER [in]	0.032
OUTER DIAMETER OF WASHER [in]	0.354
INNER DIAMETER OF WASHER [in]	0.195
BOLT HEAD DIAMETER [in]	0.31
FLANGE DATA	
THICK OF FLANGE 1 [in]	0.236
THICK OF FLANGE 2 [in]	0.394
DIAMETER OF HOLE [in]	0.21

BOLT MATERIAL PROPERTY DATA	
TEMP FACTOR FOR ULTIMATE STRENGHT	0.94
TEMP FACTOR FOR YIELD STRENGHT	0.94
ULTIMATE TENSILE ALLOWABLE STRESS [ksi]	160
YIELD TENSILE ALLOWABLE STRESS [ksi]	110
TEMP FACTOR FOR MODULUS	0.94
MODULUS OF ELASTICITY [ksi]	29100
THERMAL COEFF - HOT [1E(-6)/deg]	8.7
THERMAL COEFF - COLD [1E(-6)/deg]	8.5
INSERT MATERIAL PROPERTY DATA	
TEMP FACTOR FOR ULTIMATE STRENGHT	1
ULTIMATE TENSILE ALLOWABLE STRESS [ksi]	150
NUT MATERIAL PROPERTY DATA	
TEMP FACTOR FOR ULTIMATE STRENGHT	NA
TENSILE ULTIMATE ALLOWABLE STRESS [psi]	NA
ULTIMATE AXIAL LOAD [lb]	NA
WASHER MATERIAL PROPERTY DATA	
TEMP FACTOR FOR MODULUS	1
MODULUS OF ELASTICITY [ksi]	29100
FLANGE MATERIAL PROPERTY DATA	
TEMP FACTOR FOR MODULUS OF FLANGE 1	1
TEMP FACTOR FOR MODULUS OF FLANGE 2	1
TEMP FACTOR FOR ULTIMATE STRENGHT OF FLANGE 2	0.94
ULTIMATE SHEAR ALLOWABLE STRESS OF FLANGE 2 [psi]	37999.89
MODULUS OF ELASTICITY FOR FLANGE 1 [ksi]	8300
MODULUS OF ELASTICITY FOR FLANGE 2 [ksi]	10500
THERMAL COEFF OF FLANGE 1 - HOT [1E(-6)/deg]	46
THERMAL COEFF OF FLANGE 1 - COLD [1E(-6)/deg]	46
THERMAL COEFF OF FLANGE 2 - HOT [1E(-6)/deg]	12.15
THERMAL COEFF OF FLANGE 2 - COLD [1E(-6)/deg]	12.1
ULTIMATE BEARING ALLOWABLE STRESS FOR FLANGE 1 [psi]	20000
YIELD BEARING ALLOWABLE STRESS FOR FLANGE 1 [psi]	NA
ULTIMATE BEARING ALLOWABLE STRESS FOR FLANGE 2 [psi]	102000
YIELD BEARING ALLOWABLE STRESS FOR FLANGE 2 [psi]	79000
TORQUE AND PRELOAD DATA	
MAX TORQUE [lb in]	40.0
max torque [N m]	4.5
MIN TORQUE [lb in]	35.0
min torque [N m]	4.0
COEFFICIENT OF UTILIZATION [%]	71.693
LADING PLANE FACTOR	0.5
PRELOAD UNCETRAINTY	0.35
TORQUE COEFFICIENT	0.2
NOMINAL CONFIGURATION SUMMARY OF MARGINS FOR BOLTS	
MOS CALCULATION - CONFIGURATION ID	NOMINAL
JOINT SEPARATION	27.51 (MAX AXIAL)
DIRECT TENSION ULTIMATE	56.47 (MAX AXIAL)
DIRECT TENSION YIELD	82.22 (MAX AXIAL)
TOTAL TENSION ULTIMATE	1 (MAX AXIAL)
TOTAL TENSION YIELD	0.383 (MAX AXIAL)
DIRECT THREAD SHEAR ULTIMATE	73.92 (MAX AXIAL)
TOTAL THREAD SHEAR ULTIMATE	1.61 (MAX AXIAL)
SHEAR ULTIMATE	0.81 (MAX SHEAR)
BENDING ULTIMATE	> 10
COMBINED SHEAR, TENSION AND BENDING ULTIMATE	0.43 (MAX SHEAR)
NOMINAL CONFIGURATION MINIMUM MOS	0.383
NOMINAL CONFIGURATION MINIMUM ULTIMATE MOS	0.43
NOMINAL CONFIGURATION SUMMARY OF MARGINS FOR BEARING FLANGES	
FLANGE 1 - BEARING ULTIMATE	0.13
FLANGE 1 - BEARING YIELD	NA
FLANGE 2 - BEARING ULTIMATE	8.65
FLANGE 2 - BEARING YIELD	10.96
NOMINAL CONFIGURATION MINIMUM MOS	FLANGE 1 - BEARING ULTIMATE

Table 8-22: JOINT 10 – nominal configuration

Questo documento contiene informazioni di proprietà di CARLO GAVAZZI SPACE SpA. Tutti i diritti sono riservati.
All information contained in this document are property of CARLO GAVAZZI SPACE SpA. All right reserved.

8.2.3.11 JOINT 11: VSB SUPPORTS/VSB BODY (NOMINAL CONF.)

VSB BODY/VSB COVER Joint 11 are CR3522-5-05 rivets made of A286.
The allowable shear force for A286 rivets with 5/32 inch diameter size is 1545 lbs (RD1).
Next images show the rivet location.

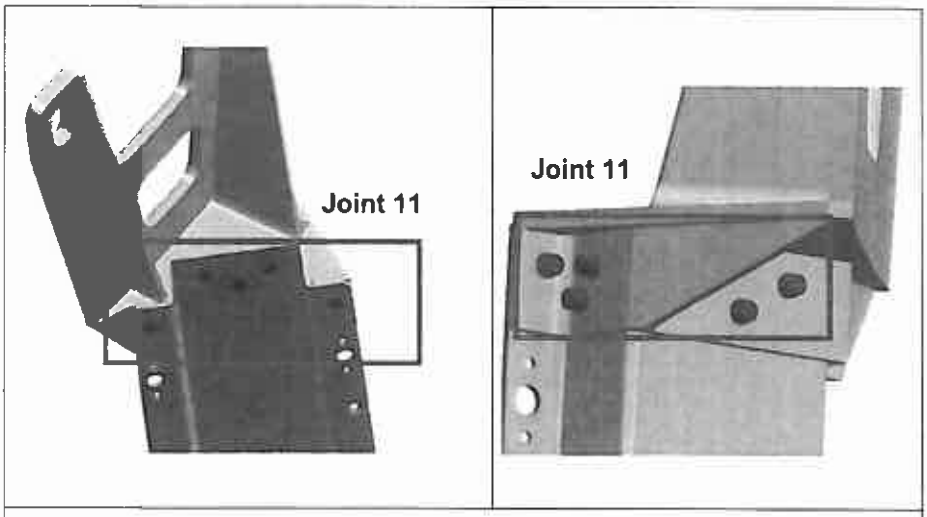

Figure 8-79: Joint 11

Next images show the forces on Joint 11 bolts (worst cases).

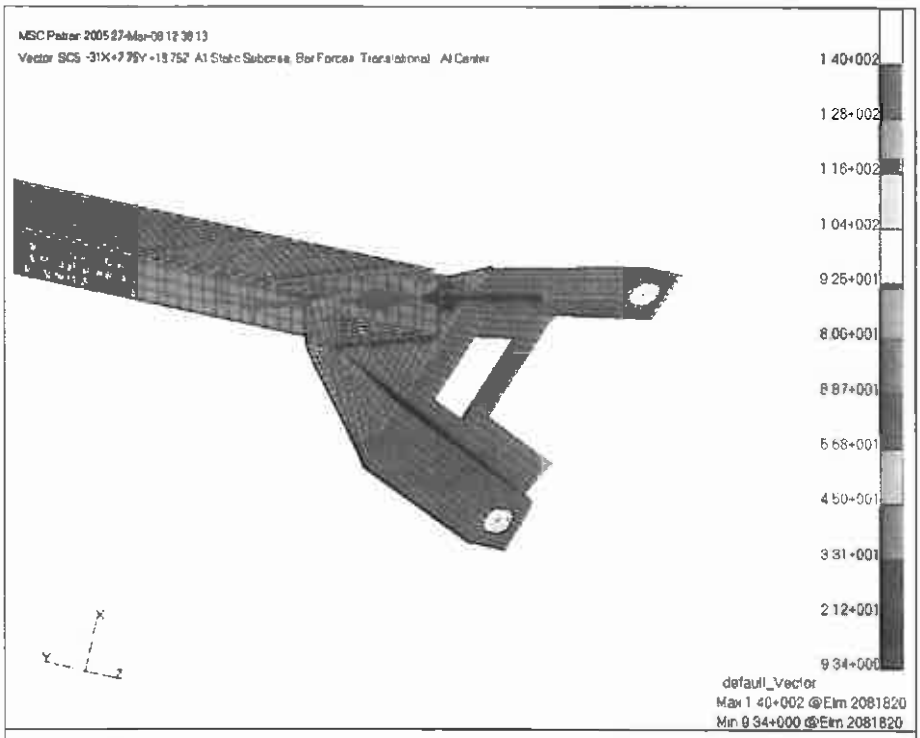

Figure 8-80: Forces on JOINT 11 – Max Axial – Load case 05

Questo documento contiene informazioni di proprietà di CARLO GAVAZZI SPACE SpA. Tutti i diritti sono riservati.
All information contained in this document are property of CARLO GAVAZZI SPACE SpA. All right reserved.

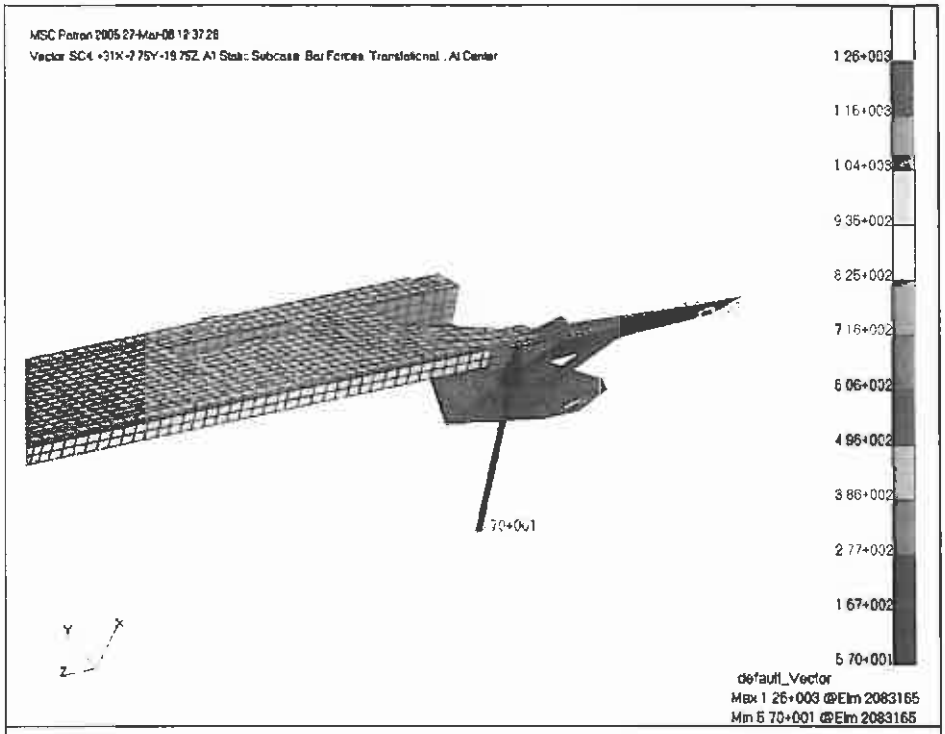

Figure 8-81: Forces on JOINT 11 – Max Shear and combined – Load case 04

The axial force has a negligible value, therefore the rivet verification has been performed considering only the maximum shear force.
In the following table input and output data are shown.

Questo documento contiene informazioni di proprietà di CARLO GAVAZZI SPACE SpA. Tutti i diritti sono riservati.
All information contained in this document are property of CARLO GAVAZZI SPACE SpA. All right reserved.

JUNCTION PROPERTIES	
RIVET	CR3522-5-05
NUMBER OF FLANGES	2
FLANGE 1 NAME	VSB SUPPORT
FLANGE 1 MATERIAL	AL 7075 T7351
FLANGE 1 MATERIAL SPEC	
FLANGE 1 THICKNESS [in]	0 118
FLANGE 1 HOLE DIAMETER [in]	0 162
FLANGE 2 NAME	VSB
FLANGE 2 MATERIAL	CFRP
FLANGE 2 MATERIAL SPEC	
FLANGE 2 THICKNESS [in]	0.083
FLANGE 2 HOLE DIAMETER [in]	0.162
NOMINAL CONFIGURATION BOLT LOADS	
MAX AXIAL - CONFIGURATION ID	NOMINAL
MAX AXIAL - ELEMENT ID	2081820
MAX AXIAL - LOAD CASE ID	7
MAX AXIAL - AXIAL LOAD [N]	140.0
max axial - axial load [lb]	31.5
MAX AXIAL - SHEAR LOAD [N]	9 3
max axial - shear load [lb]	2.1
MAX SHEAR - CONFIGURATION ID	NOMINAL
MAX SHEAR - ELEMENT ID	2083165
MAX SHEAR - LOAD CASE ID	6
MAX SHEAR - AXIAL LOAD [N]	57.1
max shear - axial load [lb]	12 8
MAX SHEAR - SHEAR LOAD [N]	1264 3
max shear - shear load [lb]	284 2
MAX COMBINED - CONFIGURATION ID	NOMINAL
MAX COMBINED - ELEMENT ID	SAME AS MAX SHEAR
MAX COMBINED - LOAD CASE ID	
MAX COMBINED - AXIAL LOAD [N]	
max combined - axial load [lb]	
MAX COMBINED - SHEAR LOAD [N]	
max combined - shear load [lb]	
FLANGE DATA	
THICK OF FLANGE 1 [in]	0.236
THICK OF FLANGE 2 [in]	0.394
DIAMETER OF HOLE [in]	0.21

BOLT MATERIAL PROPERTY DATA	
TEMP FACTOR FOR ULTIMATE STRENGHT	0.94
TEMP FACTOR FOR YIELD STRENGHT	0 94
ULTIMATE TENSILE ALLOWABLE FORCE [lbs]	635
ULTIMATE SHEAR ALLOWABLE FORCE [lbs]	1545
TEMP FACTOR FOR MODULUS	0 94
MODULUS OF ELASTICITY [ksi]	29100
THERMAL COEFF - HOT [1E(-6)/deg]	9 1
THERMAL COEFF - COLD [1E(-6)/deg]	7.8
INSERT MATERIAL PROPERTY DATA	
TEMP FACTOR FOR ULTIMATE STRENGHT	NA
ULTIMATE TENSILE ALLOWABLE STRESS [ksi]	NA
FLANGE MATERIAL PROPERTY DATA	
TEMP FACTOR FOR MODULUS OF FLANGE 1	1
TEMP FACTOR FOR MODULUS OF FLANGE 2	1
TEMP FACTOR FOR ULTIMATE STRENGHT OF FLANGE 2	NA
ULTIMATE SHEAR ALLOWABLE STRESS OF FLANGE 2 [psi]	NA
MODULUS OF ELASTICITY FOR FLANGE 1 [ksi]	10500
MODULUS OF ELASTICITY FOR FLANGE 2 [ksi]	9000
THERMAL COEFF OF FLANGE 1 - HOT [1E(-6)/deg]	12 15
THERMAL COEFF OF FLANGE 1 - COLD [1E(-6)/deg]	12 1
THERMAL COEFF OF FLANGE 2 - HOT [1E(-6)/deg]	1
THERMAL COEFF OF FLANGE 2 - COLD [1E(-6)/deg]	1
ULTIMATE BEARING ALLOWABLE STRESS FOR FLANGE 1 [psi]	102000
YIELD BEARING ALLOWABLE STRESS FOR FLANGE 1 [psi]	79000
ULTIMATE BEARING ALLOWABLE STRESS FOR FLANGE 2 [psi]	80000
YIELD BEARING ALLOWABLE STRESS FOR FLANGE 2 [psi]	NA
NOMINAL CONFIGURATION SUMMARY OF MARGINS FOR BOLTS	
MOS CALCULATION - CONFIGURATION ID	NOMINAL
AXIAL ULTIMATE	7 25 (MAX AXIAL)
SHEAR ULTIMATE	1 23 (MAX SHEAR)
NOMINAL CONFIGURATION MINIMUM MOS	1.23

Table 8-23: JOINT 11 – nominal configuration

Questo documento contiene informazioni di proprietà di CARLO GAVAZZI SPACE SpA. Tutti i diritti sono riservati.
All information contained in this document are property of CARLO GAVAZZI SPACE SpA. All right reserved.

8.2.3.12 JOINT ANALYSIS MOS SUMMARY FOR NOMINAL CONFIGURATION

In the following tables MoS summary for joint analysis is presented.

BOLTED JUNCTION (Joint 1-10)		
MOS TYPE	**MoS**	**Joint**
JOINT SEPARATION	0.19	2B
DIRECT TENSION ULTIMATE	3.19	2B
DIRECT TENSION YIELD	3.61	2B
TOTAL TENSION ULTIMATE	0.45	3A
TOTAL TENSION YIELD	0.25	7
DIRECT THREAD SHEAR ULTIMATE	4.09	2B
TOTAL THREAD SHEAR ULTIMATE	0.47	3B
SHEAR ULTIMATE	0.22	7
COMBINED SHEAR, TENSION AND BENDING ULTIMATE	0.03	7
FLANGE 1 - BEARING ULTIMATE	0.0002	7
FLANGE 1 - BEARING YIELD	3	2B
FLANGE 2 - BEARING ULTIMATE	1.35	7
FLANGE 2 - BEARING YIELD	7.64	4

RIVETS (Joint 11)	
MOS TYPE	**MoS**
AXIAL ULTIMATE	7.25
SHEAR ULTIMATE	1.23

Table 8-24: Joint analysis MoS summary in nominal configuration

Questo documento contiene informazioni di proprietà di CARLO GAVAZZI SPACE SpA. Tutti I diritti sono riservati.
All information contained in this document are property of CARLO GAVAZZI SPACE SpA. All right reserved.

8.2.4 LOCAL BUCKLING ANALYSIS FOR NOMINAL CONFIGURATION

The stress buckling analysis has been performed on the following item:

- 8.2.4.1 SPOKES

The Eulerian buckling has been considered and the following formula has been used to calculate the allowable compressive load (see RD 4):

For Eulerian buckling of **bars** the following formula

$$P_{cr} = \left(\frac{\pi}{L\sqrt{C}} \right)^2 \cdot E \cdot I$$

Where:

- L [m] is the bar length
- E [Pa] is the elasticity modulus
- I [m^4] is the minimum moment of inertia of the bar section
- C is the fixity coefficient that depends on the constraint typology (See next figure)

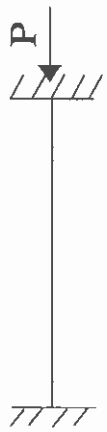

Fixed rotation configuration (C=1/4)

Figure 8-82: Eulerian buckling geometry

Questo documento contiene informazioni di proprietà di CARLO GAVAZZI SPACE SpA. Tutti i diritti sono riservati.
All information contained in this document are property of CARLO GAVAZZI SPACE SpA. All right reserved.

8.2.4.1 SPOKES

The buckling instability analysis for the GFRP spokes has been performed considering the maximum applied axial load on spokes resulting from the bolt verification (chapter 8.2.3.3).
The following table show the obtained results.

AMS Zenith Radiator Buckling Analysis Result Table			
	Description	Results	Note
D_s	Spoke Diameter [mm]	3	Chp. 5.5.2
L_s	Spoke length [mm]	55	Chp. 5.5.2
SF_b	Safety factor Buckling	2	Chp. 7.1
E_{GFRP}	E-modulus GFRP spoke [Mpa]	35000	Chp. 5.4.9
A	Cross Section [mm^2]	7.1	
L_{cr}	Critical Buckling length [mm]	27.5	
I	Moment of inertia [mm^4]	4.0	
F_{MAX}	Maximum applied force [N]	608.00	Chp. 8.2.3.3
F_{cr}	Critical buckling force [N]	1816.2	
MoS_b	Margin of Safety for buckling	0.49	

Table 8-25 Spoke buckling analysis results

8.2.4.2 INSTABILITY ANALYSIS MOS SUMMARY FOR NOMINAL CONFIGURATION

MARGIN OF SAFETY FOR LOCAL INSTABILITY									
ITEM	DWG NUMBER	LC	EID	MATERIAL	$F_{APPLIED\ [N]}$	$F_{cr\ [N]}$	SF	MoS	NOTE
SPOKES	NA	27	4587529	GFRP	608	1816.2	2	0.49	Force Calculation for Eulerian instability

Table 8-26: MOS summary table for local buckling - spokes

Questo documento contiene informazioni di proprietà di CARLO GAVAZZI SPACE SpA. Tutti i diritti sono riservati.
All information contained in this document are property of CARLO GAVAZZI SPACE SpA. All right reserved.

8.2.5 INSERTS AND BONDED JOINT VERIFICATION FOR NOMINAL CONFIGURATION

The following connection has been verified:

- Zenith Radiator panel inserts;
- Condenser line-radiator skin connection;
- Radiator panel skins-Rohacell connection verification;
- Spokes GFRP bar – Titanium ends verification.

8.2.5.1 ZENITH RADIATOR PANEL INSERTS

From the bolt analysis (chp. 8.2.3) the inserts maximum axial and shear forces are determined.
The following table summarizes the force entities and locations.

CONNECTED ITEMS	FORCE [N]	REMARKS
Spokes-Zenith Radiator	608	Maximum Axial Force acting on inserts
Bimetallic joint bracket-Zenith Radiator	1691.6	Maximum Shear Force acting on inserts

Table 8-27 Maximum forces acting on the Zenith radiator Inserts

These forces have been compared to the inserts test results of RD 19.
In particular the test has been performed on a smaller insert size, but using the same glue (EC2216) on the same materials.
The following figures show the comparison of the inserts geometry.

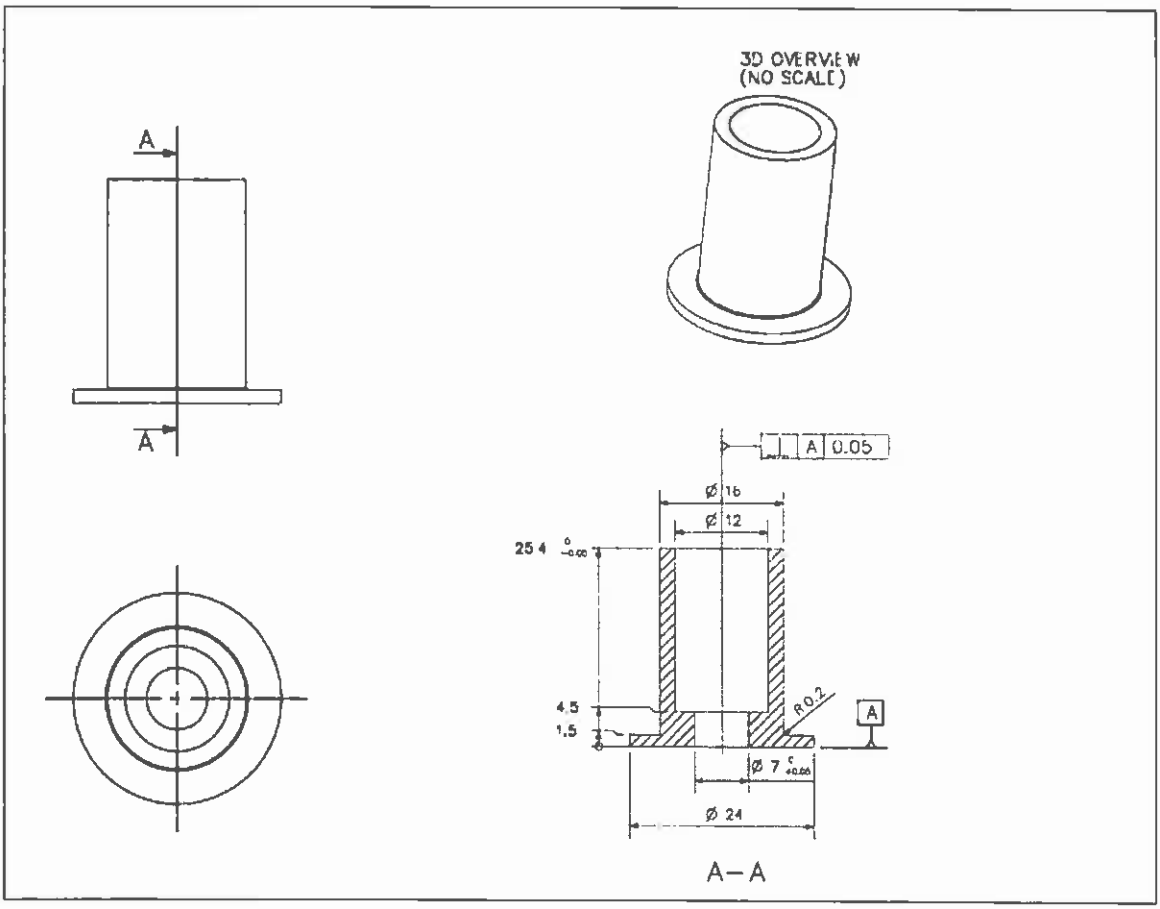

Questo documento contiene informazioni di proprietà di CARLO GAVAZZI SPACE SpA. Tutti i diritti sono riservati.
All information contained in this document are property of CARLO GAVAZZI SPACE SpA. All right reserved.

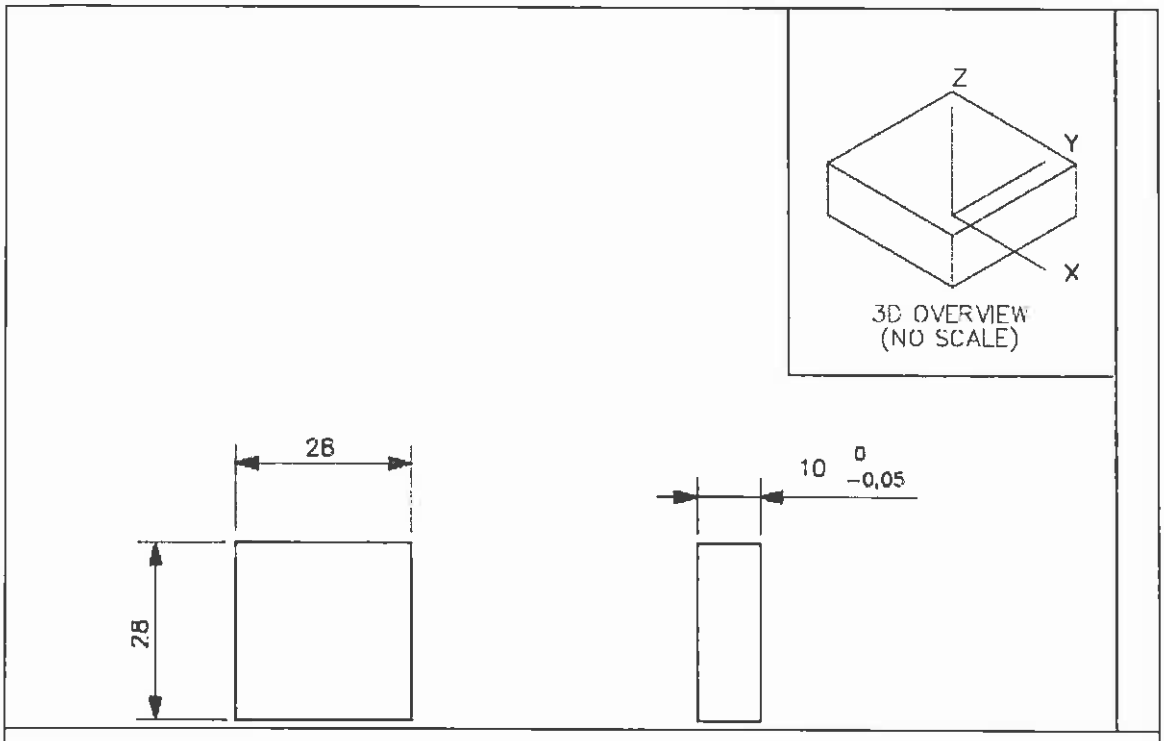

Figure 8-83: On top the tested insert drawing, on bottom a zenith radiator insert

The tested inserts have a lower glued area than the zenith radiator inserts, therefore the RD 19 results can be considered conservatively as allowable force values for the current design to be verified.
The following table summarizes the obtained MoS.

DESCRIPTION	VALUE	REMARKS
Safety Factor for insert verification	2	
Axial Allowable Force [N]	1900	RD 19
Shear Allowable Force [N]	6498	RD 19
Applied Max. Axial Force [N]	608	Chp. 8.2.3.3
Applied Max. Shear Force [N]	1691.6	Chp. 8.2.3.10
MoS_{AXIAL}	**0.56**	
MoS_{SHEAR}	**0.92**	

Table 8-28 Zenith Radiator Insert verification summary

Questo documento contiene informazioni di proprietà di CARLO GAVAZZI SPACE SpA. Tutti i diritti sono riservati.
All information contained in this document are property of CARLO GAVAZZI SPACE SpA. All right reserved.

8.2.5.2 BONDED JUNCTION VERIFICATION

The bonded junctions have been verified calculating the interface forces between the glued parts. In particular the nodal forces (freebody loads) have been calculated from the following interacting items:

- Condenser Line – Radiator Panel (Upper skin and Rohacell);
- Radiator skins – Radiator Core and Condenser Line.

In order to obtain an applied stress value the worst forces have been compared to an influence area.

$$\sigma_{\mathrm{GLUE}} = \frac{F_{Freebody}}{A_{Influence}}$$

Where

σ_{GLUE} is the stress value on the bonded junction (the same formulation is used for the shear stress calculation);

$F_{Freebody}$ is the nodal interface worst force obtained by FEA;

$A_{Influence}$ is the force application area.

This stress has to be compared with the used glue allowable stress limit (both tensile and lap shear).

Questo documento contiene informazioni di proprietà di CARLO GAVAZZI SPACE SpA. Tutti i diritti sono riservati.
All information contained in this document are property of CARLO GAVAZZI SPACE SpA. All right reserved.

8.2.5.2.1 CONDENSER LINE RADIATOR PANEL VERIFICATION

For the Condenser line the product of the bar element length corresponding to the worst case force node (that is on the small bar element of condenser line) and a lower limit for the possible glued section length has been used as force application area.
The considered measures are shown in the following figures.

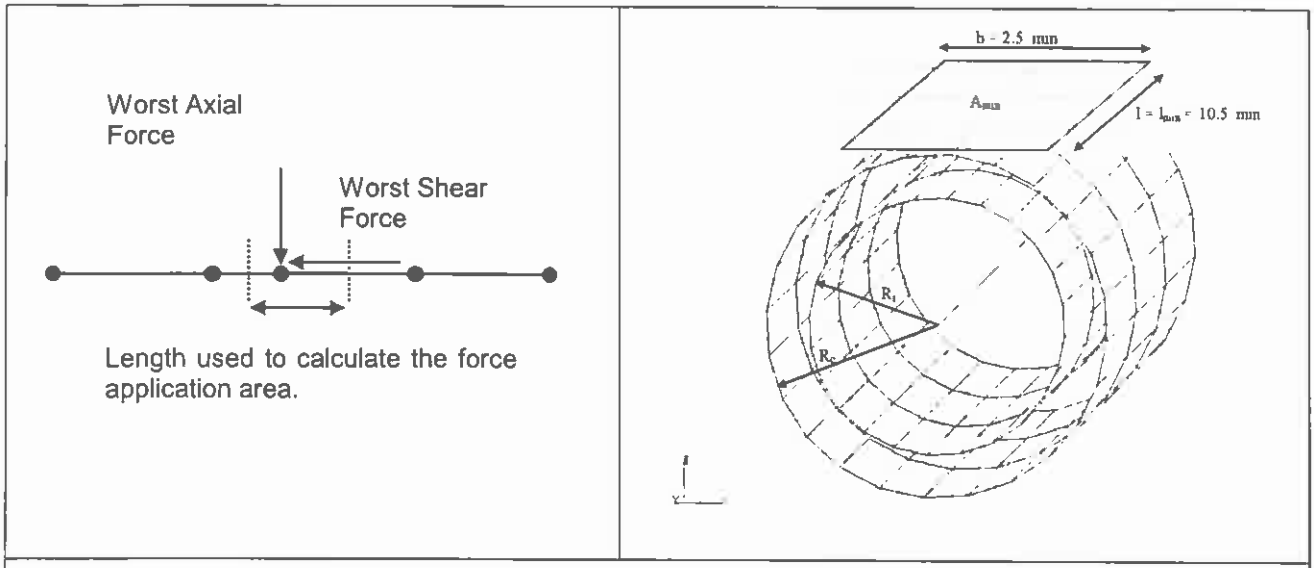

Figure 8-84: Force Application Area for the Condenser Line

The adhesive used to connect the condenser line to the radiator skin is the thermally conductive Master Bond EP 21TDC (RD 20) .
The worst case is for **Node 164838** for the **Load Case 27** (both for axial and shear).
The following table summarizes the obtained MoS.

Load Case	Node	Force	Area	Stress on Glue	SF	Glue Allowable Stress	MoS	Note
27	164838	36.2	2.63E-05	1.38	2	7.3	1.6	Maximum axial load case
27	164838	80.3	2.63E-05	3.06	2	6.8	0.1	Maximum shear load case

Table 8-29: MOS summary table for condenser line – radiator skin bonded connection

Questo documento contiene informazioni di proprietà di CARLO GAVAZZI SPACE SpA. Tutti i diritti sono riservati.
All information contained in this document are property of CARLO GAVAZZI SPACE SpA. All right reserved.

8.2.5.2.2 ZENITH RADIATOR CONDENSER LINE-PANEL SKIN VERIFICATION

For the Radiator skin the smallest element placed in the radiator skin most stressed part has been used as force application area.
The following figure shows a superimposition of elements stress due to all the load cases (chp. 6) and it highlights the radiator skin part used to determine the influence area.

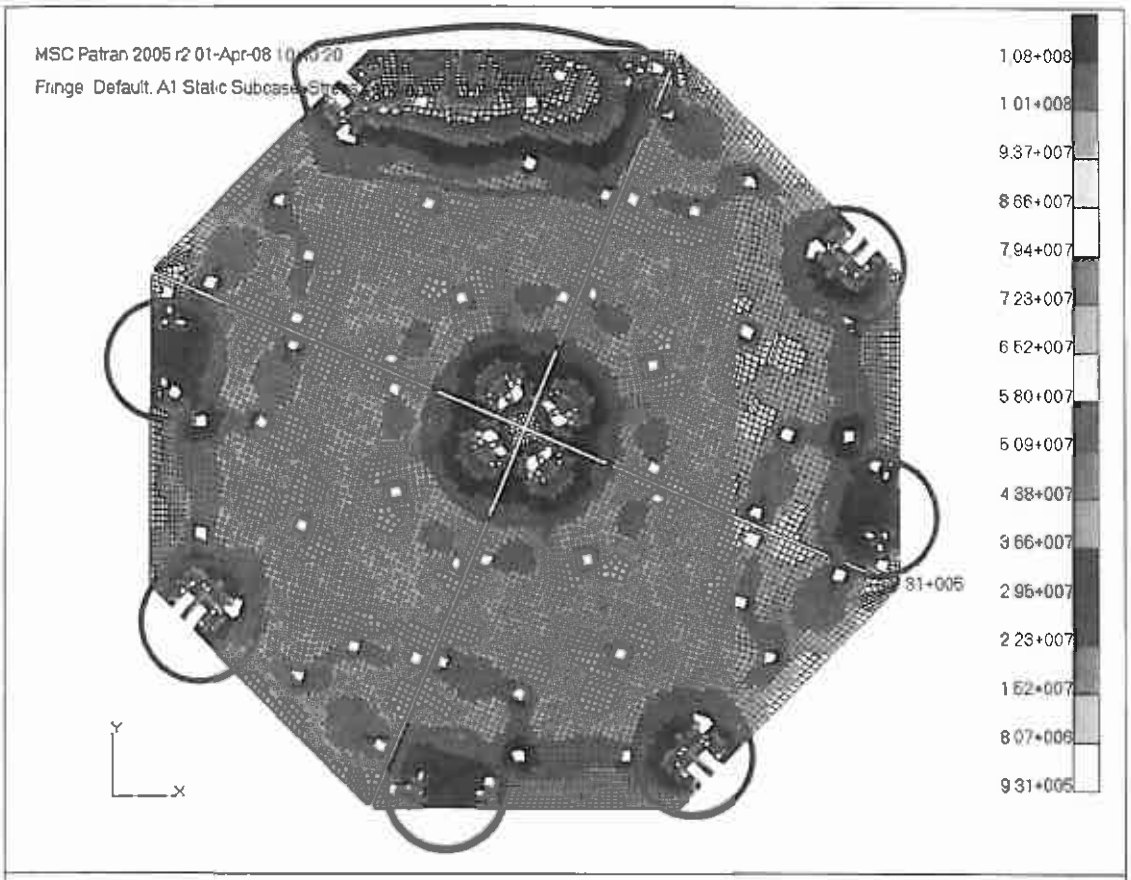

Figure 8-85: Force Application Area for the Radiator Skin

The adhesive used to connect the Radiator Skin to the Rohacell core is the EC2216 (RD 21).
The worst case is for **Node 2726744** for the **Load Case 28** (both for axial and shear) placed on upper radiator skin.
The following table summarizes the obtained MoS.

Load Case	Node	Force	Area	Stress on Glue	SF	Glue Allowable Stress	MoS	Note
28	2726744	289.2	6.50E-05	4.45	2	18	1.0	Maximum axial load case
28	2726744	479.0	6.50E-05	7.37	2	22	0.5	Maximum shear load case

Table 8-30: MOS summary table for radiator skin – Rohacell core connection

Questo documento contiene informazioni di proprietà di CARLO GAVAZZI SPACE SpA. Tutti i diritti sono riservati.
All information contained in this document are property of CARLO GAVAZZI SPACE SpA. All right reserved.

8.2.5.2.3 SPOKES GFRP BAR – TITANIUM ENDS VERIFICATION

For the Spokes GFRP bar-Titanium ends connection the considered glued surface is shown in the following figure.

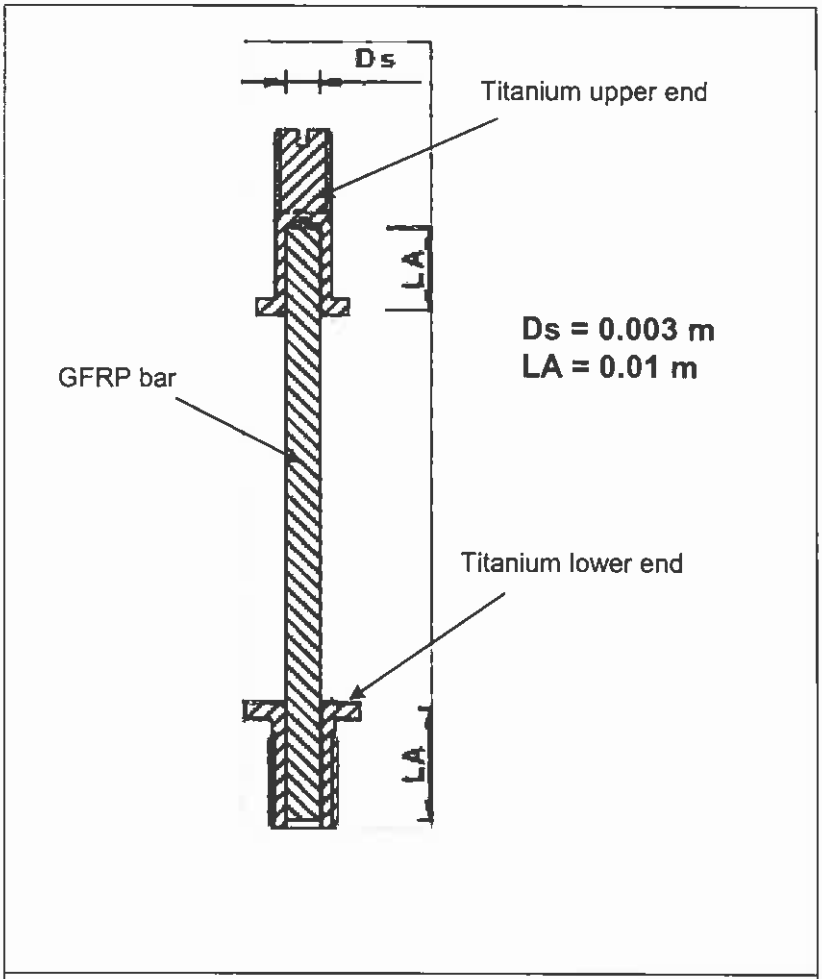

Figure 8-86: Spokes GFRP bar-Titanium ends connection geometry

The adhesive used to connect the Spokes GFRP bar and Titanium ends is the EC2216 (RD 21).
The worst axial load case is for **Elm 4587529** for the **Load Case 27**.
The following table summarizes the obtained MoS.

Load Case	Node	Force	Area	Stress on Glue	SF	Glue Allowable Stress	MoS	Note
27	4587529	608.0	9.40E-05	6.47	2	22	0.7	Maximum axial load case

Table 8-31: MOS summary table for Spokes GFRP bar-Titanium ends connection

Questo documento contiene informazioni di proprietà di CARLO GAVAZZI SPACE SpA. Tutti i diritti sono riservati.
All information contained in this document are property of CARLO GAVAZZI SPACE SpA. All right reserved.

8.2.5.3 INSERTS AND BONDED JOINT MOS SUMMARY FOR NOMINAL CONFIGURATION

MARGIN OF SAFETY FOR INSERTS AND BONDED JUNCTION

ITEMS	Load Case	ID	Force	Area	Stress on Glue	SF	Allowable Force/Stress	MU	MoS	Note
Inserts	27	4587259	608	–	–	2	1900	N	0.56	Maximum axial load case
	29	2B2	1691.6	–	–	2	6480	N	0.92	Maximum shear load case
Condenser Line - Radiator Skin	27	164838	36.2	2.63E-05	1.38	2	7.3	MPa	1.6	Maximum axial load case
	27	164838	80.3	2.63E-05	3.06	2	6.8	MPa	0.1	Maximum shear load case
Radiator skin - Rohacell core	28	2726744	289.2	6.50E-05	4.45	2	18	MPa	1.0	Maximum axial load case
	28	2726744	479.0	6.50E-05	7.37	2	22	MPa	0.5	Maximum shear load case
Spoke GFRP bar - Titanium ends	27	4587529	608.0	9.40E-05	6.47	2	22	MPa	0.7	Maximum axial load case

Table 8-32: MOS summary table for inserts and bonded junction

8.2.6 BIMETALLIC JOINT VERIFICATION

The following figure shows the bimetallic joint shape.

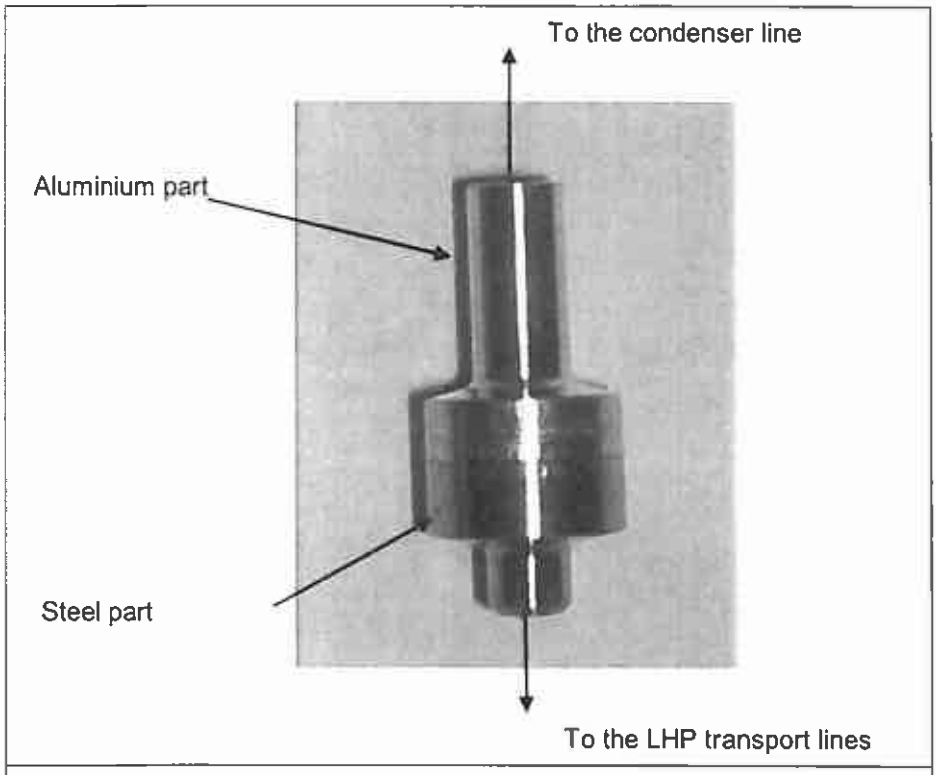

Figure 8-87: Bimetallic Joint

In the CRYO TCS system the bimetallic joint has been modelled as a concentrated mass fixed by a RBE2 rigid element to the bimetallic support bracket.
The joint verification has been performed taking from the FE analysis the worst axial and shear forces and calculating the MoS using the bimetallic joint vendor datasheet.
The Worst axial condition is for **Load Case 28** on bimetallic joint placed on the bimetallic support bracket **2A** and the force value is **30.7 N.**

Questo documento contiene informazioni di proprietà di CARLO GAVAZZI SPACE SpA. Tutti i diritti sono riservati.
All information contained in this document are property of CARLO GAVAZZI SPACE SpA. All right reserved.

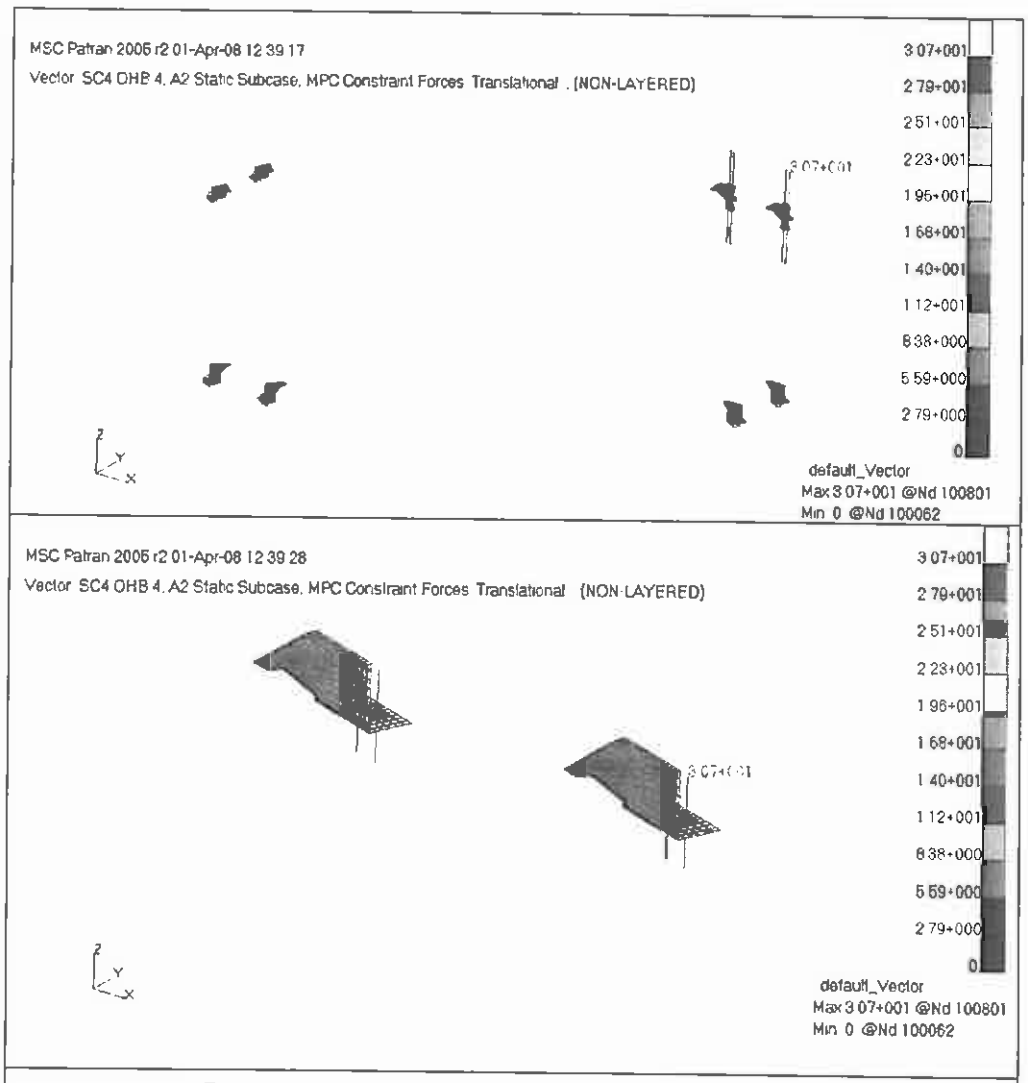

Figure 8-88: Bimetallic joint axial worst case for LC 28

Questo documento contiene informazioni di proprietà di CARLO GAVAZZI SPACE SpA. Tutti i diritti sono riservati.
All information contained in this document are property of CARLO GAVAZZI SPACE SpA. All right reserved.

The Worst shear condition is for **Load Case 29** on bimetallic joint placed on the bimetallic support bracket **2C** and the force value is **34.8 N.**

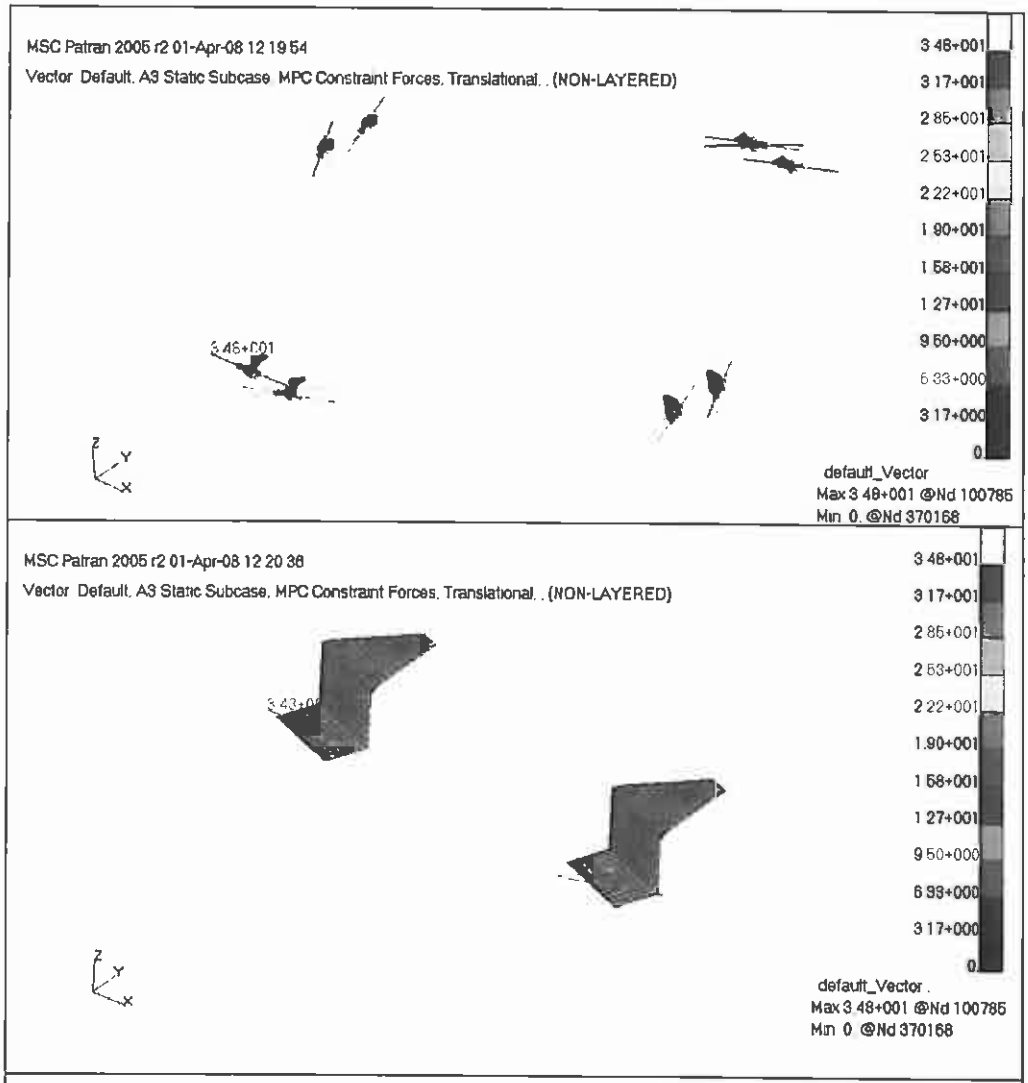

Figure 8-89: Bimetallic joint shear worst case for LC 29

The following table summarizes the obtained MoS.

Load Case	ID	Force	SF	Bi-metallic Allowable Force	MoS	Note
28	2A	30.7	2	24875.00	>10	Maximum axial load case. The allowable force values reference is RD 18
29	2C	34.8	2	6055.5	>10	Maximum shear load case. The allowable force values reference is RD 18

Table 8-33: MOS summary table for bimetallic joint

Questo documento contiene informazioni di proprietà di CARLO GAVAZZI SPACE SpA. Tutti i diritti sono riservati.
All information contained in this document are property of CARLO GAVAZZI SPACE SpA. All right reserved.

8.2.6.1 BIMETALLIC JOINT MOS SUMMARY FOR NOMINAL CONFIGURATION

MARGIN OF SAFETY FOR INSERTS AND BONDED JUNCTION							
ITEMS	Load Case	ID	Force	SF	Allowable Force	MoS	Note
Bi-metallic joints	28	2A	30.70	2.00	24875.00	>10	Maximum axial load case. The allowable force values reference is RD18
	29	2C	34.80	2.00	6055.5	>10	Maximum shear load case. The allowable force values reference is RD18

Table 8-34: MOS summary table for bimetallic joint

Questo documento contiene informazioni di proprietà di CARLO GAVAZZI SPACE SpA. Tutti i diritti sono riservati.
All information contained in this document are property of CARLO GAVAZZI SPACE SpA. All right reserved.

9. CRYO TCS SYSTEM AND VSB STRUCTURAL ANALYSIS FOR FAIL SAFE CONFIGURATION

All junctions that provide redundant load paths are considered as fail safe items.

In the considered fail safe configuration the **most loaded** bolt has been removed from the model (see Table 8-24)

Then, 11 new finite element models have been generated in which the one by one the most loaded bolts have been removed..
The labels of the bolts that have been removed from the model are shown in the following tables:

- Joint 01a Table 9-6
- Joint 01b Table 9-7
- Joint 02a Table 9-8
- Joint 02b Table 9-9
- Joint 03a Table 9-10
- Joint 03b Table 9-11
- Joint 04 Table 9-12
- Joint 05 Table 9-13
- Joint 06 Table 9-14
- Joint 07 Table 9-15
- Joint 08 Table 9-16
- Joint 09 Table 9-17
- Joint 10 Table 9-18
- Joint 11 Table 9-19

For fail safe configuration, the following analyses have been performed:

- 9.1 DYNAMIC ANALYSIS FOR FAIL SAFE CONFIGURATION
- 9.2 STATIC ANALYSIS FOR FAIL SAFE CONFIGURATION

The purpose of the dynamic analysis is to find

A. resonance frequencies modifications for the structure
B. load paths modifications inside the structure
C. internal forces and the stresses modifications inside the structure
D. which structure parts have to be verified if the resonance frequencies are changed

Questo documento contiene informazioni di proprietà di CARLO GAVAZZI SPACE SpA. Tutti i diritti sono riservati.
All information contained in this document are property of CARLO GAVAZZI SPACE SpA. All right reserved.

9.1 DYNAMIC ANALYSIS FOR FAIL SAFE CONFIGURATION

The modal analysis has been reported for the fail safe configurations that give a frequency shift greater than 5 % of the main modes of the structure. The comparisons between frequencies of nominal configuration and fail safe configuration for Joint 1A, Joint 1B and Joint 6 respectively, are listed in the following tables. For each fail safe configuration the main frequency shift is shown.

All modes up to 250 Hz with an effective mass greater than 5% are reported here below.

NOMINAL					FAIL SAFE Joint 1A				
Mode ID	FREQ. [Hz]	EFF. MASS X DIRECTION [kg]	EFF. MASS Y DIRECTION [kg]	EFF. MASS Z DIRECTION [kg]	Mode ID	FREQ. [Hz]	EFF. MASS X DIRECTION [kg]	EFF. MASS Y DIRECTION [kg]	EFF. MASS Z DIRECTION [kg]
6	50.40	1.933	0.104	0.008	6	50.40	1.933	0.104	0.008
21	68.57	0.096	2.065	0.035	21	68.57	0.096	2.064	0.035
115	136.54	2.367	1.091	0.002	119	135.22	1.383	4.292	0.006
116	136.54	2.367	1.091	0.002	116	136.54	2.367	1.091	0.002
117	136.60	1.011	2.163	0.003	117	136.54	2.367	1.091	0.002
118	136.62	0.953	2.024	0.004	118	136.60	1.011	2.163	0.003
122	138.58	3.195	1.362	0.041	123	138.58	3.195	1.362	0.041
123	138.58	3.195	1.362	0.041	124	138.58	3.195	1.362	0.041
124	138.63	1.505	3.608	0.043	125	138.63	1.505	3.608	0.043
125	138.66	1.525	3.577	0.046	142	155.35	0.057	0.035	3.488
142	155.35	0.057	0.035	3.488	145	155.98	0.078	0.019	4.103
145	155.98	0.078	0.019	4.103	146	155.98	0.078	0.019	4.103
146	155.98	0.078	0.019	4.103	147	156.28	0.001	0.094	3.614
147	156.32	0.017	0.091	3.63[illegible]	150	186.80	2.280	0.135	0.119
192	195.57	0.843	3.492	0.053	193	195.57	0.843	3.492	0.053
193	195.57	0.843	3.492	0.053	194	195.57	0.843	3.492	0.053
194	195.68	3.350	0.859	0.062	195	195.68	3.350	0.859	0.062
195	195.94	2.876	0.678	0.065					

Table 9-1: Nominal vs Fail Safe Joint 1A, modal analysis

The relevant shift frequency for joint 1A fail safe configuration is shown.

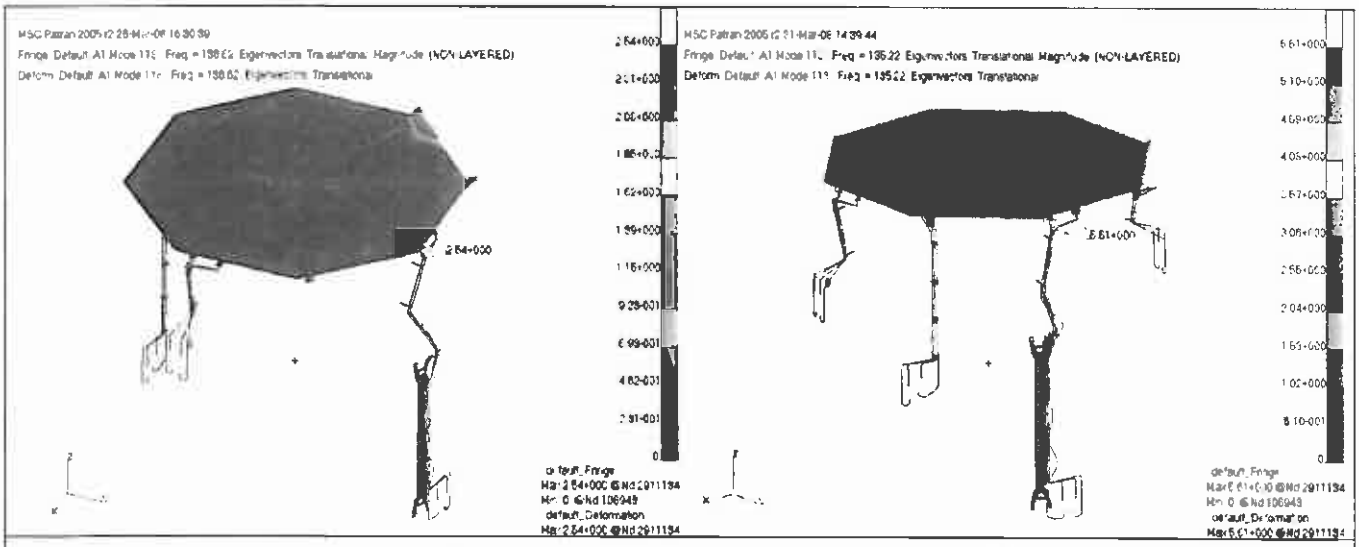

Figure 9-1: modal comparison Nominal / Fail Safe Joint 1A

Questo documento contiene informazioni di proprietà di CARLO GAVAZZI SPACE SpA. Tutti i diritti sono riservati.
All information contained in this document are property of CARLO GAVAZZI SPACE SpA. All right reserved.

NOMINAL					FAIL SAFE Joint 1B				
Mode ID	FREQ. [Hz]	EFF. MASS X DIRECTION [kg]	EFF. MASS Y DIRECTION [kg]	EFF. MASS Z DIRECTION [kg]	Mode ID	FREQ. [Hz]	EFF. MASS X DIRECTION [kg]	EFF. MASS Y DIRECTION [kg]	EFF. MASS Z DIRECTION [kg]
6	50.40	1.933	0.104	0.008	6	50.40	1.933	0.104	0.008
21	68.57	0.096	2.065	0.035	21	68.57	0.096	2.065	0.035
115	136.54	2.367	1.091	0.002	33	76.83	0.945	1.285	0.018
116	136.54	2.367	1.091	0.002	35	79.81	0.779	0.970	0.001
117	136.60	1.011	2.163	0.003	116	136.29	2.488	2.021	0.000
118	136.62	0.953	2.024	0.004	117	136.54	2.367	1.091	0.002
122	138.58	3.195	1.362	0.041	118	136.60	1.011	2.163	0.003
123	138.58	3.195	1.362	0.041	119	136.62	0.953	2.024	0.004
124	138.63	1.505	3.608	0.043	123	138.37	2.160	1.671	0.050
125	138.66	1.525	3.577	0.046	124	138.58	3.195	1.362	0.041
142	155.35	0.057	0.035	3.498	125	138.63	1.505	3.608	0.043
145	155.98	0.078	0.019	4.103	126	138.66	1.525	3.577	0.046
146	155.98	0.078	0.019	4.103	143	155.35	0.057	0.035	3.498
147	156.32	0.017	0.091	3.638	146	155.98	0.078	0.019	4.103
192	195.57	0.843	3.492	0.053	147	155.99	0.071	0.041	4.090
193	195.57	0.843	3.492	0.053	148	156.32	0.017	0.091	3.638
194	195.68	3.350	0.859	0.062	193	195.57	0.843	3.492	0.053
195	195.94	2.876	0.678	0.065	194	195.68	3.350	0.859	0.062
					195	195.94	2.876	0.678	0.065

Table 9-2: Nominal vs Fail Safe Joint 1B, modal analysis

The relevant shift frequency for joint 1B fail safe configuration is shown.

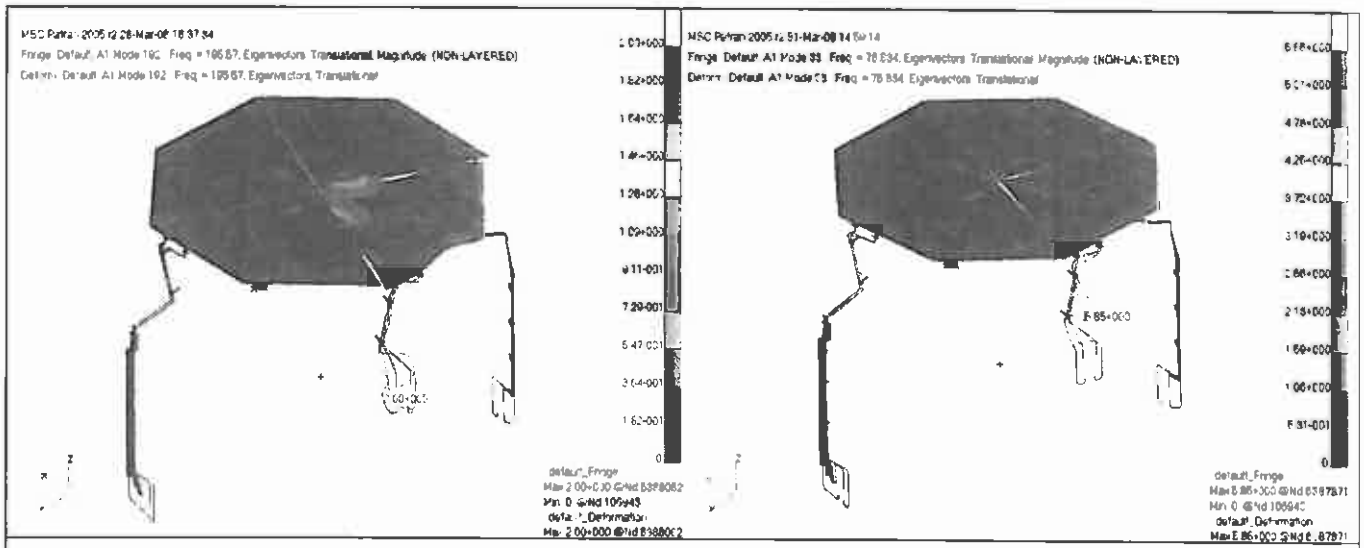

Figure 9-2: modal comparison Nominal / Fail Safe Joint 1B

Questo documento contiene informazioni di proprietà di CARLO GAVAZZI SPACE SpA. Tutti i diritti sono riservati.
All information contained in this document are property of CARLO GAVAZZI SPACE SpA. All right reserved.

NOMINAL					FAIL SAFE Joint 6				
Mode ID	FREQ. [Hz]	EFF. MASS X DIRECTION [kg]	EFF. MASS Y DIRECTION [kg]	EFF. MASS Z DIRECTION [kg]	Mode ID	FREQ. [Hz]	EFF. MASS X DIRECTION [kg]	EFF. MASS Y DIRECTION [kg]	EFF. MASS Z DIRECTION [kg]
6	50.40	1.933	0.104	0.008	2	39.70	2.382	0.243	0.001
21	68.57	0.096	2.085	0.035	12	63.09	0.049	1.333	0.019
115	136.54	2.367	1.091	0.002	116	136.54	2.367	1.091	0.002
116	136.54	2.367	1.091	0.002	117	136.54	2.367	1.091	0.002
117	136.60	1.011	2.163	0.003	118	136.60	1.011	2.163	0.003
118	136.62	0.953	2.024	0.004	119	136.63	0.934	1.982	0.002
122	138.58	3.195	1.362	0.041	123	138.58	3.195	1.362	0.041
123	138.58	3.195	1.362	0.041	124	138.58	3.195	1.362	0.041
124	138.63	1.505	3.608	0.043	125	138.63	1.505	3.608	0.043
125	138.66	1.525	3.577	0.046	126	138.66	1.508	3.524	0.043
142	155.35	0.057	0.035	3.498	143	155.35	0.057	0.035	3.498
145	155.98	0.078	0.019	4.103	146	155.98	0.078	0.019	4.103
146	155.98	0.078	0.019	4.103	147	155.98	0.078	0.019	4.103
147	156.32	0.017	0.091	3.638	148	156.27	0.021	0.067	3.713
192	195.57	0.843	3.492	0.053	192	195.57	0.843	3.492	0.053
193	195.57	0.843	3.492	0.053	193	195.57	0.843	3.492	0.053
194	195.68	3.350	0.859	0.062	194	195.68	3.350	0.859	0.062
195	195.94	2.876	0.678	0.065	195	195.87	3.156	0.736	0.105

Table 9-3: Nominal vs Fail Safe Joint 6, modal analysis

The relevant shift frequency for joint 6 fail safe configuration is shown.

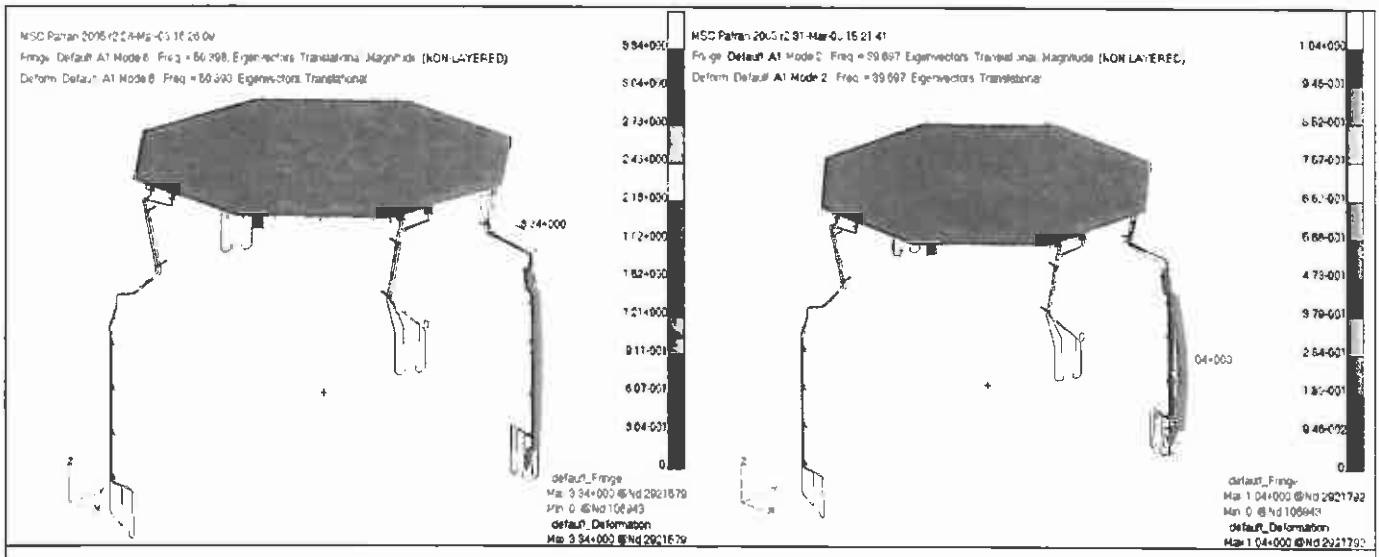

Figure 9-3: modal comparison Nominal / Fail Safe Joint 6

Questo documento contiene informazioni di proprielà di CARLO GAVAZZI SPACE SpA. Tutti i diritti sono riservati.
All information contained in this document are property of CARLO GAVAZZI SPACE SpA. All right reserved.

9.2 STATIC ANALYSIS FOR FAIL SAFE CONFIGURATION

Fail safe static analyses have been performed for those configurations that give different frequency and mode shapes compared to the nominal configuration. The analyzed fail safe configurations are:

- Joint 1A
- Joint 1B
- Joint 6

For these configuration the parts of the structure affected by a different dynamic response have been analyzed and reported. For the other parts, stress is not subjected to any change.

The safety factor used for fail safe configuration is set to 1, both for the MoS calculation and load application factor for failure index analysis.

9.2.1 STRESS ANALYSIS FOR FAIL SAFE CONFIGURATION JOINT 1A

For the configuration Joint 1A, Z-Bracket and Radiator (core and skin) are verified with the worst load case.

9.2.1.1 Z- BRACKET

The worst condition is for **ELEMENT 2056554** for **Load Case 29**.
The resulting failure index is: **FI = 0.39 MPa**.
Following figures show failure index contour for this subcase.

Questo documento contiene informazioni di proprietà di CARLO GAVAZZI SPACE SpA. Tutti i diritti sono riservati.
All information contained in this document are property of CARLO GAVAZZI SPACE SpA. All right reserved.

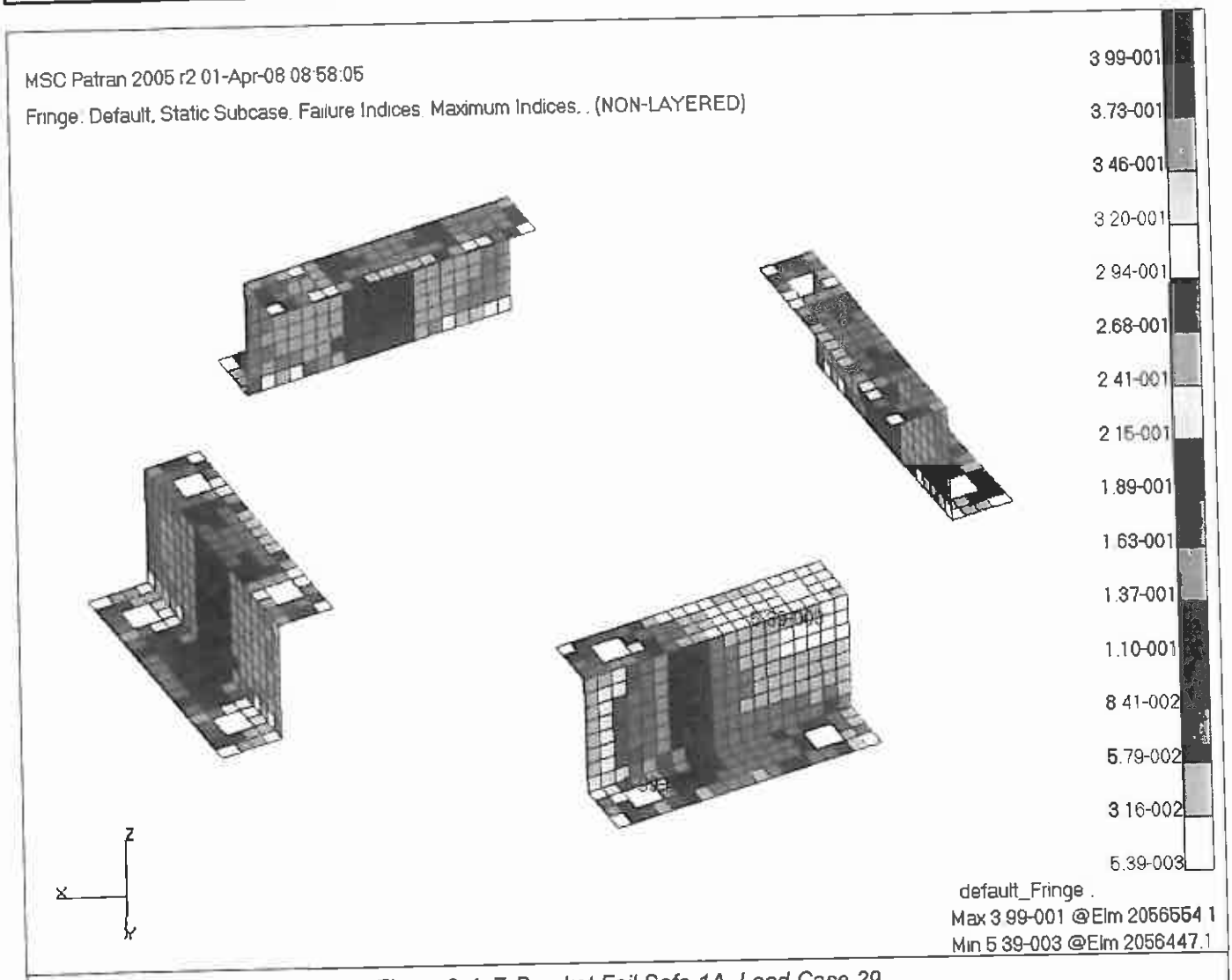

Figure 9-4: Z-Bracket Fail Safe 1A, Load Case 29

Peak stress due to elements near bolts is not considered and bearing analysis is performed in chapter 9.2.4.1 .

Questo documento contiene informazioni di proprietà di CARLO GAVAZZI SPACE SpA. Tutti i diritti sono riservati.
All information contained in this document are property of CARLO GAVAZZI SPACE SpA. All right reserved.

9.2.1.2 ZENITH RADIATOR PANEL (SKIN)

The worst condition is for **ELEMENT 4593473** for **Load Case 29** at **Layer Z2**.
The resulting Von Mises stress is: **f_{VM} = 108.5 MPa.**
Following figure shows stress distribution for this subcase.

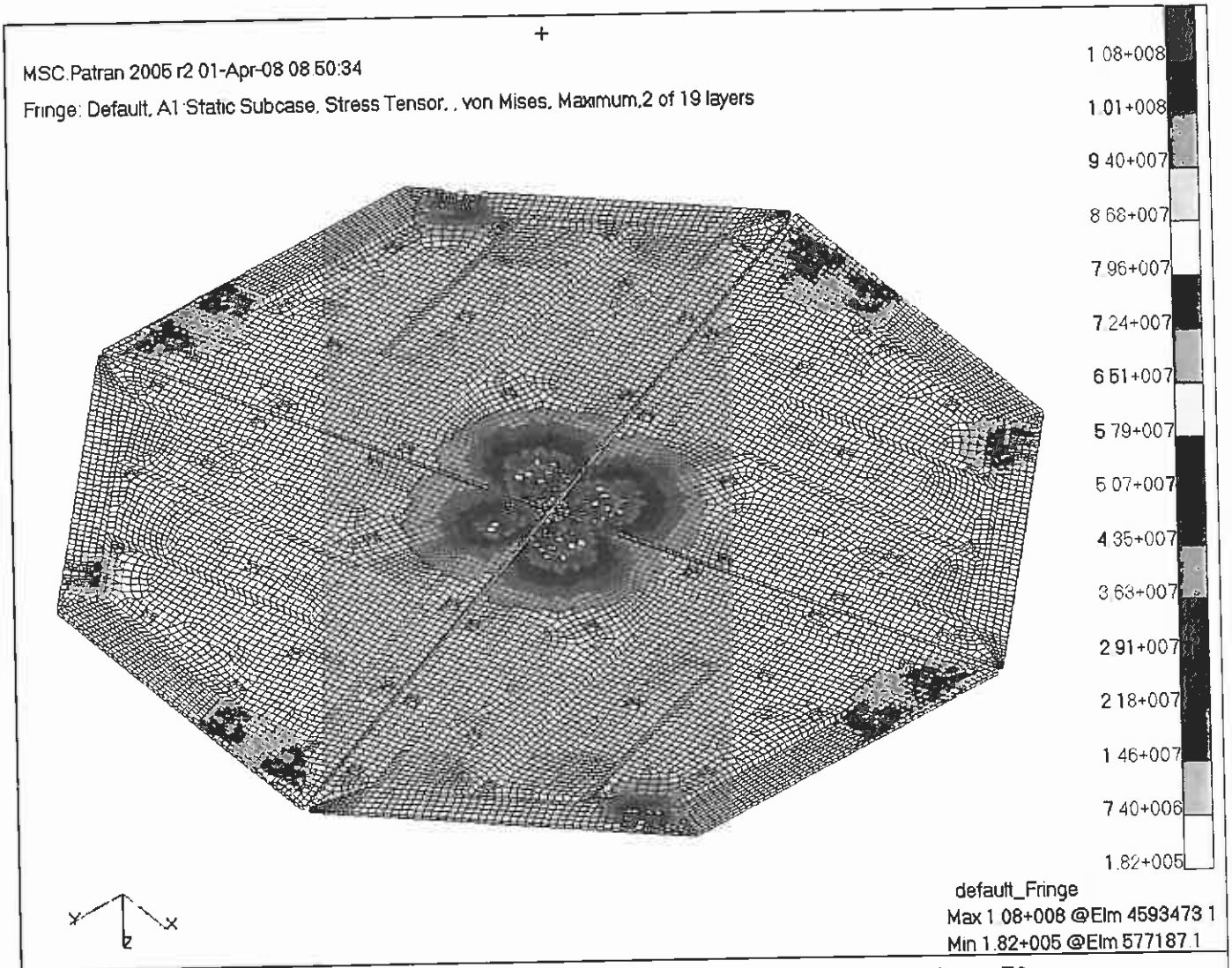

Figure 9-5: Zenith Radiator Panel (skin) Fail Safe 1A, Load Case 29, Layer Z2

Questo documento contiene informazioni di proprietà di CARLO GAVAZZI SPACE SpA. Tutti i diritti sono riservati.
All information contained in this document are property of CARLO GAVAZZI SPACE SpA. All right reserved.

9.2.1.3 ZENITH RADIATOR PANEL (CORE)

The worst condition is for **ELEMENT 1915634** for **Load Case 25**.
The resulting Maximum Shear stress is: f_{SH} **= 0.4 MPa.**
Following figures show stress distribution for this subcase.

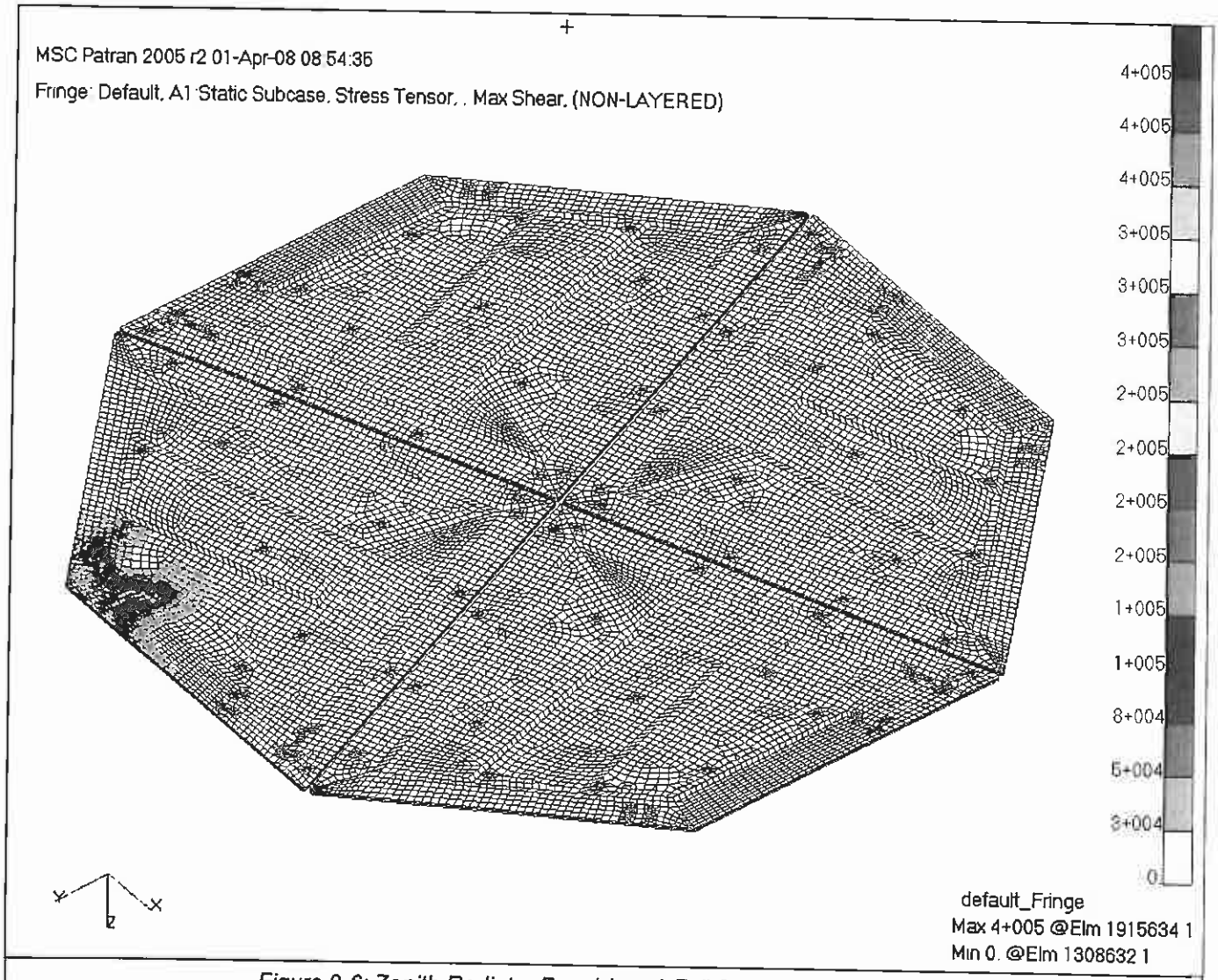

Figure 9-6: Zenith Radiator Panel (core) Fail Safe 1A, Load Case 25

Questo documento contiene informazioni di proprietà di CARLO GAVAZZI SPACE SpA. Tutti i diritti sono riservati.
All information contained in this document are property of CARLO GAVAZZI SPACE SpA. All right reserved.

9.2.2 STRESS ANALYSIS FOR FAIL SAFE CONFIGURATION JOINT 1B

For the configuration Joint 1B, Z-Bracket and Radiator (core and skin) are verified with the worst load case.

9.2.2.1 Z- BRACKET

The worst condition is for **ELEMENT 4606416** for **Load Case 29**.
The resulting failure index is: **FI = 0.39 MPa**.
Following figures show failure index contour for this subcase.

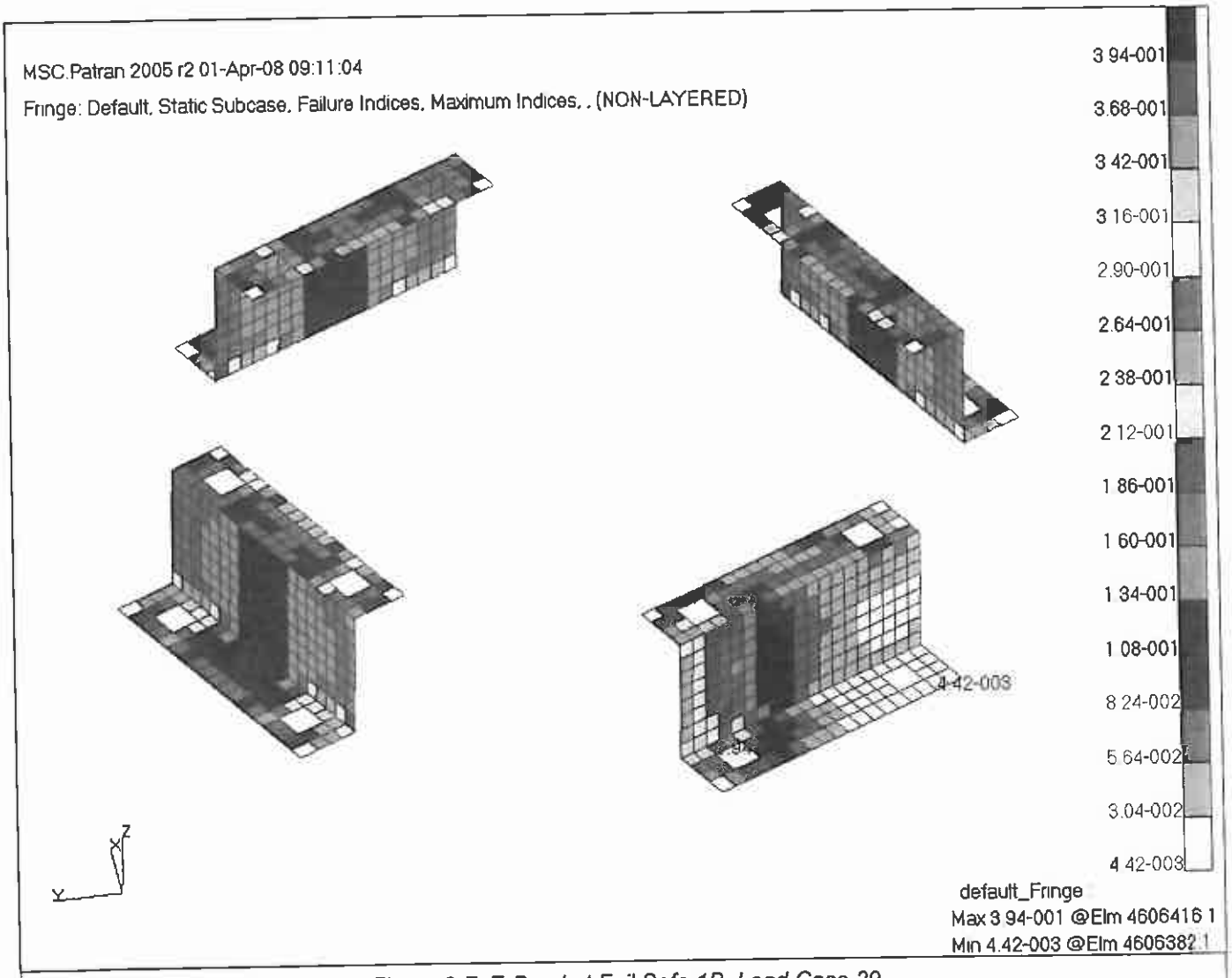

Figure 9-7: Z-Bracket Fail Safe 1B, Load Case 29

Peak stress due to elements near bolts is not considered and bearing analysis is performed in chapter 9.2.4.1 .

Questo documento contiene informazioni di proprietà di CARLO GAVAZZI SPACE SpA. Tutti i diritti sono riservati.
All information contained in this document are property of CARLO GAVAZZI SPACE SpA. All right reserved.

9.2.2.2 ZENITH RADIATOR PANEL (SKIN)

The worst condition is for **ELEMENT 430416** for **Load Case 29** at **Layer Z2**.
The resulting Von Mises stress is: f_{VM} **= 108 MPa**.
Following figure shows stress distribution for this subcase.

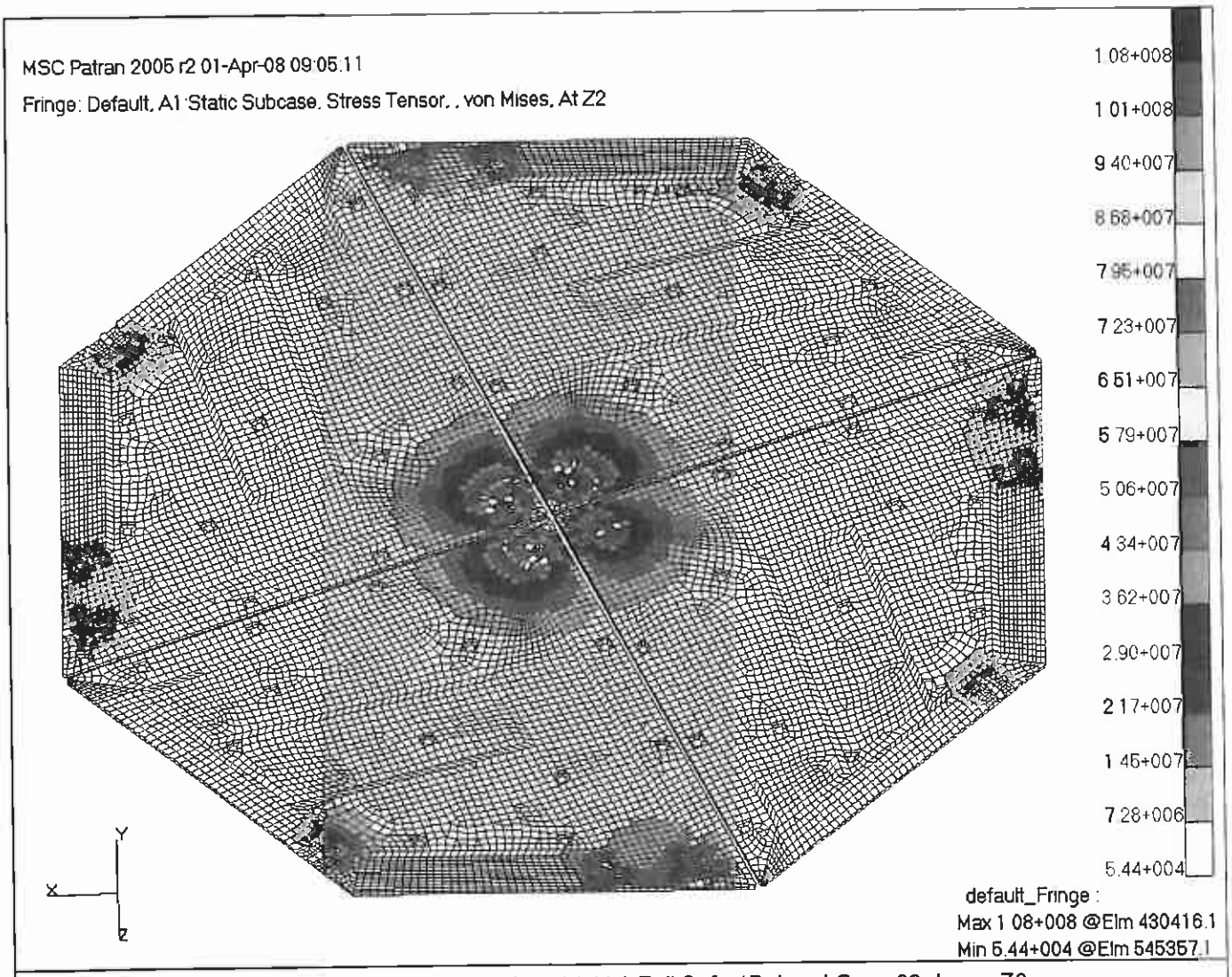

Figure 9-8: Zenith Radiator Panel (skin) Fail Safe 1B, Load Case 29, Layer Z2

Questo documento contiene informazioni di proprietà di CARLO GAVAZZI SPACE SpA. Tutti i diritti sono riservati.
All information contained in this document are property of CARLO GAVAZZI SPACE SpA. All right reserved.

9.2.2.3 ZENITH RADIATOR PANEL (CORE)

The worst condition is for **ELEMENT 1915634** for **Load Case 25**.
The resulting Maximum Shear stress is: **f_{SH} = 0.4 MPa**.
Following figures show stress distribution for this subcase.

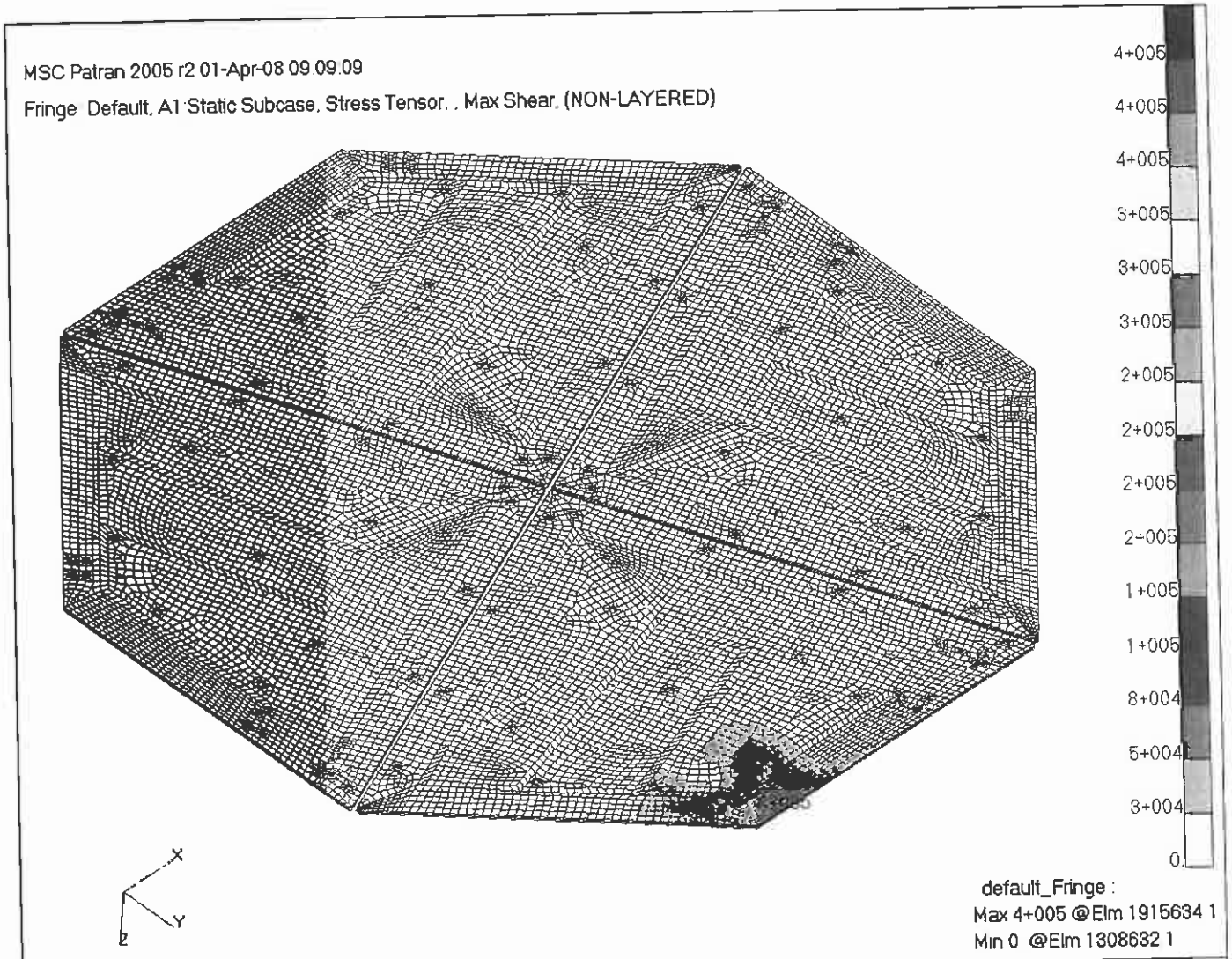

Figure 9-9: Zenith Radiator Panel (core) Fail Safe 1B, Load Case 25

9.2.3 STRESS ANALYSIS FOR FAIL SAFE CONFIGURATION JOINT 6

For the configuration Joint 6, VSB (cover and body) and VSB Support are verified with the worst load case.

9.2.3.1 VSB SUPPORT

The worst condition is for **ELEMENT 2082215** for **Load Case 10** at **Layer Z2**.
The resulting Von Mises stress is: **f_{VM} = 177 MPa**.

Questo documento contiene informazioni di proprietà di CARLO GAVAZZI SPACE SpA. Tutti i diritti sono riservati.
All information contained in this document are property of CARLO GAVAZZI SPACE SpA. All right reserved.

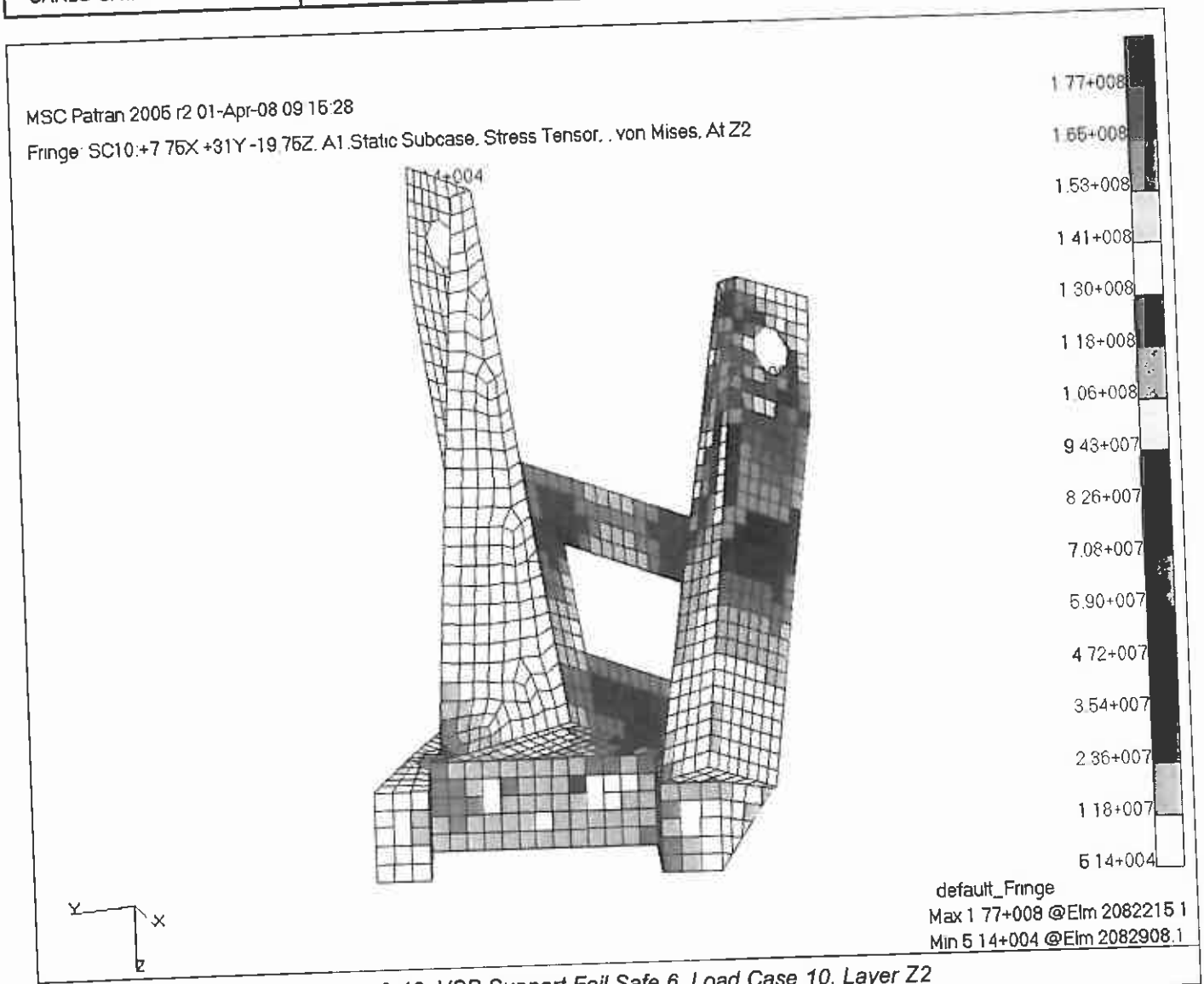

Figure 9-10: VSB Support Fail Safe 6, Load Case 10, Layer Z2

Peak stress due to elements near bolts is not considered and bearing analysis is performed in chapter 9.2.4.6 .

Questo documento contiene informazioni di proprietà di CARLO GAVAZZI SPACE SpA. Tutti i diritti sono riservati.
All information contained in this document are property of CARLO GAVAZZI SPACE SpA. All right reserved.

9.2.3.2 VSB COVER

The worst condition is for **ELEMENT 2083354** for **Load Case 10**.
The resulting failure index for is: **FI = 0.29**.
Following figure shows FI distribution for this subcase.

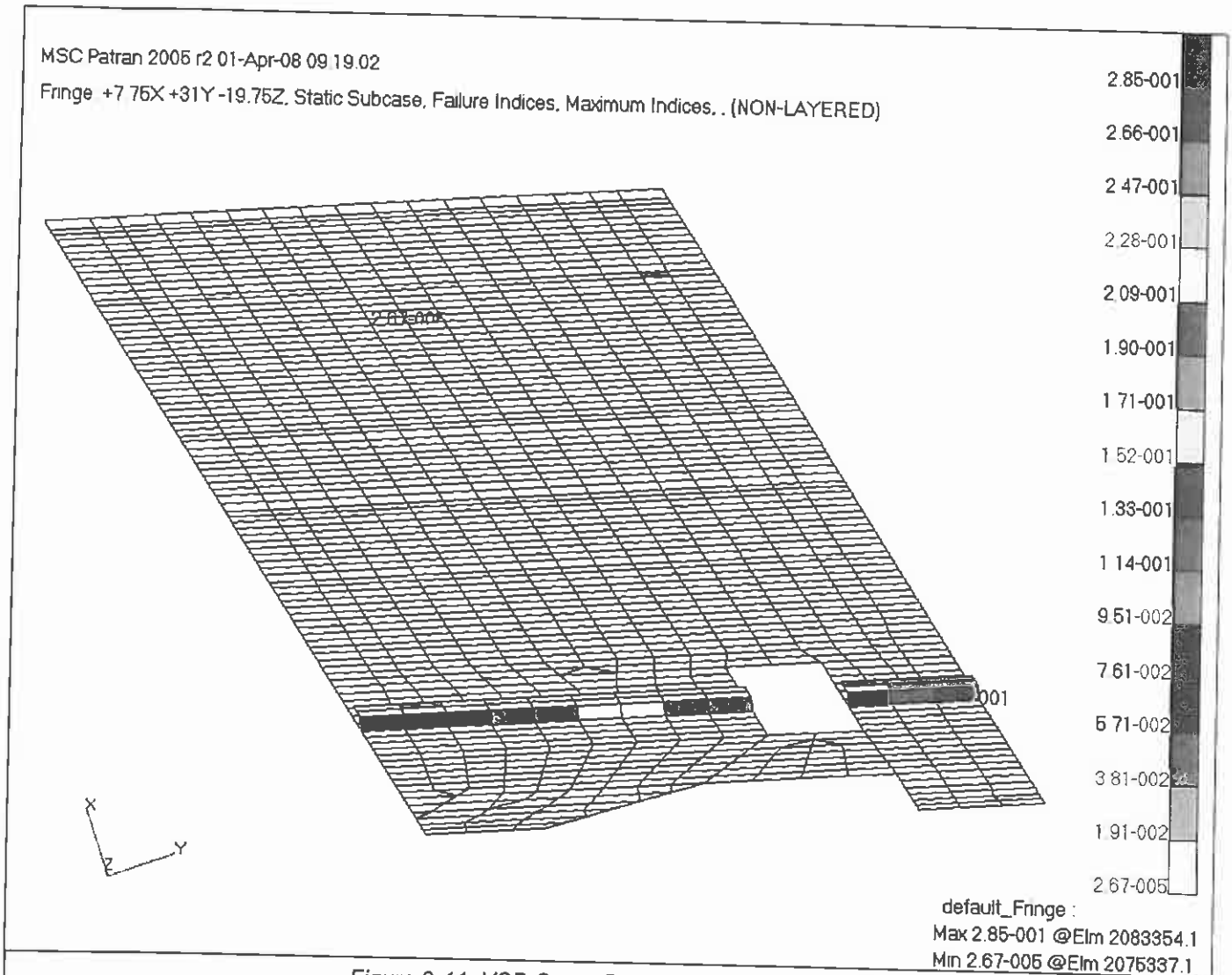

Figure 9-11: VSB Cover Fail Safe 6, Load Case 10

Questo documento contiene informazioni di proprietà di CARLO GAVAZZI SPACE SpA. Tutti i diritti sono riservati.
All information contained in this document are property of CARLO GAVAZZI SPACE SpA. All right reserved.

9.2.3.3 VSB BODY

The worst condition is for **ELEMENT 2083294** for **Load Case 29**.
The resulting failure index for is: **FI = 0.31**.
Following figure shows FI distribution for this subcase.

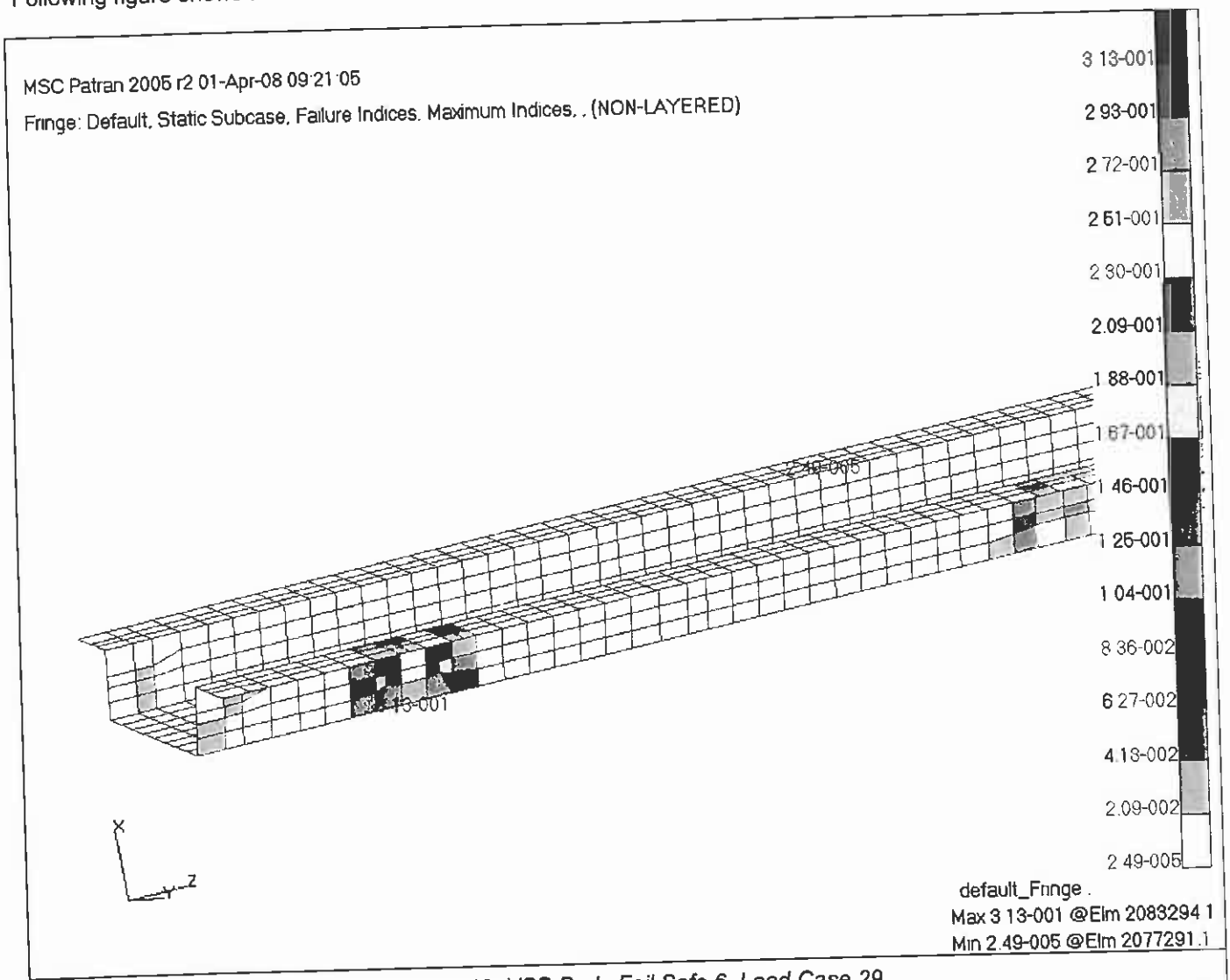

Figure 9-12: VSB Body Fail Safe 6, Load Case 29

Questo documento contiene informazioni di proprietà di CARLO GAVAZZI SPACE SpA. Tutti i diritti sono riservati.
All information contained in this document are property of CARLO GAVAZZI SPACE SpA. All right reserved.

9.2.3.4 STRESS ANALYSIS MOS SUMMARY FOR FAIL SAFE CONFIGURATION

ITEM	DWG NUMBER	Material	Load Case	Layer	Elm ID	Stress Note	Stress on FEM [MPa]	Allowable Yield Stress [MPa]	Allowable Ultimate Stress [MPa]	S.F.y	S.F.u	M.S.y	M.S.u	Note	Ref. Page
ZENITH RADIATOR PANEL SKIN	40-AMS02TCS-220.01.01 40-AMS02TCS-220.01.03 40-AMS02TCS-220.01.06	Al 2024	29	Z2	4593473	VM	108	400	462	-	1	-	>2	Fail Safe 1A	162
ZENITH RADIATOR PANEL CORE	40-AMS02TCS-220.01.02	Rohacell	25	-	1915634	Max Shear	0.4	-	0.8	-	1	-	0.95	Fail Safe 1A	163
VSB SUPPORT	40-AMS02TCS-281.00.02 40-AMS02TCS-281.00.03	Al 7075	10	Z2	2082215	VM	177	393	468	-	1	-	1.65	Fail Safe 6	166
ITEM	**DWG NUMBER**	**Material**	**LC**	**Elm ID**		**S.F.u**	**Fl Teal-Wu**	**Note**	**Ref. Page**						
Z-BRACKET	40-AMS02TCS-250.00.00 40-AMS02TCS-250.00.00	GFRP	29	4606416		1	0.39	Fail Safe 1A	160						
VSB COVER	40-AMS02TCS-281.00.07	CFRP	10	2083354		1	0.29	Fail Safe 6	168						
VSB BODY	40-AMS02TCS-281.00.01	CFRP	29	2083294		1	0.31	Fail Safe 6	169						

Table 9-4: MoS summary for fail safe configuration

Questo documento contiene informazioni di proprietà di CARLO GAVAZZI SPACE SpA. Tutti i diritti sono riservati.
All information contained in this document are property of CARLO GAVAZZI SPACE SpA. All right reserved.

9.2.4 JOINT ANALYSIS FOR FAIL SAFE CONFIGURATION

New acting forces on bolts have been calculated for the analyzed connection typology.
The Ultimate Safety Factor has been set to 1.

JOINT	DESCRIPTION	MATERIAL	BOLT TYPE	TORQUE RANGE [Nm]	TORQUE RANGE [lbf in]	ANALYSIS PAGE
Joint 1a	Z-BRACKET/ RADIATOR JOINT	A286 – 160 ksi	NAS1351N3	4.0 - 4.5	35.0 - 40.0	172
Joint 1b	Z-BRACKET/TRD JOINT	A286 – 160 ksi	NAS1351C4LE12	3.8 - 4.5	34.0 - 40.0	172
Joint 2a	STIFF BKT/RADIATOR JOINT	A286 – 160 ksi	NAS1351N4-16	9.0 - 10.7	80.0 - 95.0	174
Joint 2b	STIFF BKT/TRD JOINT	A286 – 160 ksi	NAS1351N4LE12	8.8 - 10.7	78.0 - 95.0	174
Joint 3a	SPOKES/RADIATOR JOINT	Ti 6Al 4V 150 ksi	SPOKES UPPER ROD END 0.19"-32	4.7 - 5.1	42.0 - 45.0	176
Joint 3b	SPOKES/TRD JOINT	Ti 6Al 4V 150 ksi	SPOKES LOWER ROD END 0.25"-28 x 1.0" L	10.8 - 10.8	96.0 - 96.0	176
Joint 4	GPS ANTENNA SUPPORT/TRD JOINT	A286 – 160 ksi	NAS1351N4LE12	8.7 - 10.7	77.0 - 95.0	178
Joint 5	GPS ANTENNA/GPS ANTENNA SUPPORT JOINT	A2-70	DIN 965 M3x16	0.4 - 0.5	3.6 - 4.0	179
Joint 6	VSB - VACUUM CASE JOINT	A286 – 80 ksi	NAS1351 C6-20	14.0 – 17.0	125.0 - 150.0	180
Joint 7	VSB BODY / LHP VSB BKT JOINT	A286 – 80 ksi	NAS1351C08-6	1.1 - 1.5	10.0 - 13.0	181
Joint 8	VSB SUPPORTS/ LHP VSB STAND-OFF JOINT	A2-70	DIN 912 M5x12	1.9 - 2.3	17.0 - 20.0	182
Joint 9	VSB BODY/VSB COVER	A286 – 80 ksi	NAS1351C3-8	2.0 - 2.1	18.0 - 19.0	183
Joint 10	BIMETALLIC SUPPORT BKT/RADIATOR JOINT	A286 – 160 ksi	NAS1351N3LE12	4.0 - 4.5	35.0 - 40.0	184
Joint 11	VSB SUPPORTS/VSB BODY JOINT	A286	CR3522-5-05	N.A.	N.A.	185

Table 9-5: Verified joint for nominal configuration

Questo documento contiene informazioni di proprietà di CARLO GAVAZZI SPACE SpA. Tutti i diritti sono riservati.
All information contained in this document are property of CARLO GAVAZZI SPACE SpA. All right reserved.

9.2.4.1 JOINT 1: Z-BRACKET (FAIL SAFE CONF.)

FAIL SAFE CONFIGURATION IDENTIFICATION	
FAIL SAFE FAILED BOLT CONFIGURATION	FLIGHT
FAIL SAFE 1 FAILED BOLT ID	213905

FAIL SAFE CONFIGURATION BOLT LOADS	
MAX AXIAL - ELEMENT ID	213906
MAX AXIAL - LOAD CASE ID	8
MAX AXIAL - AXIAL LOAD [N]	964.9
max axial - axial load [lb]	216.9
MAX AXIAL - SHEAR LOAD [N]	211.3
max axial - shear load [lb]	47.5
MAX SHEAR - ELEMENT ID	213906
MAX SHEAR - LOAD CASE ID	15
MAX SHEAR - AXIAL LOAD [N]	762.5
max shear - axial load [lb]	171.4
MAX SHEAR - SHEAR LOAD [N]	472.2
max shear - shear load [lb]	106.2
MAX COMBINED - ELEMENT ID	213906
MAX COMBINED - LOAD CASE ID	1
MAX COMBINED - AXIAL LOAD [N]	964.9
max combined - axial load [lb]	216.9
MAX COMBINED - SHEAR LOAD [N]	211.3
max combined - shear load [lb]	47.5

FAIL SAFE CONFIGURATION SUMMARY OF MARGINS FOR BOLTS	
MOS CALCULATION - CONFIGURATION ID	FAIL SAFE
DIRECT TENSION ULTIMATE	10.6 (MAX AXIAL)
TOTAL TENSION ULTIMATE	0.95 (MAX AXIAL)
DIRECT THREAD SHEAR ULTIMATE	12.92 (MAX AXIAL)
TOTAL THREAD SHEAR ULTIMATE	1.34 (MAX AXIAL)
SHEAR ULTIMATE	11.95 (MAX SHEAR)
BENDING ULTIMATE	10 (MAX AXIAL)
COMBINED SHEAR, TENSION AND BENDING ULTIMATE	0.95 (MAX AXIAL)
FAIL SAFE CONFIGURATION MINIMUM ULTIMATE MOS	0.95

FAIL SAFE CONFIGURATION SUMMARY OF MARGINS FOR BEARING FLANGES	
FLANGE 1 - BEARING ULTIMATE	15.55
FLANGE 2 - BEARING ULTIMATE	63.19
FAIL SAFE CONFIGURATION MINIMUM MOS	FLANGE 1 - BEARING ULTIMATE

Table 9-6: JOINT 1a – fail safe configuration

Questo documento contiene informazioni di proprietà di CARLO GAVAZZI SPACE SpA. Tutti i diritti sono riservati.
All information contained in this document are property of CARLO GAVAZZI SPACE SpA. All right reserved.

FAIL SAFE CONFIGURATION IDENTIFICATION	
FAIL SAFE FAILED BOLT CONFIGURATION	FLIGHT
FAIL SAFE 1 FAILED BOLT ID	6400752

FAIL SAFE CONFIGURATION BOLT LOADS	
MAX AXIAL - ELEMENT ID	2398603
MAX AXIAL - LOAD CASE ID	15
MAX AXIAL - AXIAL LOAD [N]	846.4
max axial - axial load [lb]	190.3
MAX AXIAL - SHEAR LOAD [N]	571.4
max axial - shear load [lb]	128.5
MAX SHEAR - ELEMENT ID	6400749
MAX SHEAR - LOAD CASE ID	13
MAX SHEAR - AXIAL LOAD [N]	89.0
max shear - axial load [lb]	20.0
MAX SHEAR - SHEAR LOAD [N]	1017.9
max shear - shear load [lb]	228.8
MAX COMBINED - ELEMENT ID	SAME AS MAX SHEAR
MAX COMBINED - LOAD CASE ID	
MAX COMBINED - AXIAL LOAD [N]	
max combined - axial load [lb]	
MAX COMBINED - SHEAR LOAD [N]	
max combined - shear load [lb]	

FAIL SAFE CONFIGURATION SUMMARY OF MARGINS FOR BOLTS	
MOS CALCULATION - CONFIGURATION ID	FAIL SAFE
DIRECT TENSION ULTIMATE	4.81 (MAX SHEAR)
TOTAL TENSION ULTIMATE	0.87 (MAX SHEAR)
DIRECT THREAD SHEAR ULTIMATE	6.58 (MAX SHEAR)
TOTAL THREAD SHEAR ULTIMATE	1.44 (MAX SHEAR)
SHEAR ULTIMATE	1.43 (MAX SHEAR)
BENDING ULTIMATE	10 (MAX AXIAL)
COMBINED SHEAR, TENSION AND BENDING ULTIMATE	0.93 (MAX AXIAL)
FAIL SAFE CONFIGURATION MINIMUM ULTIMATE MOS	0.87

FAIL SAFE CONFIGURATION SUMMARY OF MARGINS FOR BEARING FLANGES	
FLANGE 1 - BEARING ULTIMATE	7.27
FLANGE 2 - BEARING ULTIMATE	22.20
FAIL SAFE CONFIGURATION MINIMUM MOS	FLANGE 1 - BEARING ULTIMATE

Table 9-7: JOINT 1b – fail safe configuration

Questo documento contiene informazioni di proprietà di CARLO GAVAZZI SPACE SpA. Tutti i diritti sono riservati.
All information contained in this document are property of CARLO GAVAZZI SPACE SpA. All right reserved.

9.2.4.2 JOINT 2: STIFF BRACKET (FAIL SAFE CONF.)

FAIL SAFE CONFIGURATION IDENTIFICATION	
FAIL SAFE FAILED BOLT CONFIGURATION	FLIGHT
FAIL SAFE 1 FAILED BOLT ID	227029
FAIL SAFE CONFIGURATION BOLT LOADS	
MAX AXIAL - ELEMENT ID	214211
MAX AXIAL - LOAD CASE ID	25
MAX AXIAL - AXIAL LOAD [N]	272.4
max axial - axial load [lb]	61.2
MAX AXIAL - SHEAR LOAD [N]	314.0
max axial - shear load [lb]	70.6
MAX SHEAR - ELEMENT ID	227031
MAX SHEAR - LOAD CASE ID	4
MAX SHEAR - AXIAL LOAD [N]	89.0
max shear - axial load [lb]	20.0
MAX SHEAR - SHEAR LOAD [N]	1652.0
max shear - shear load [lb]	371.4
MAX COMBINED - ELEMENT ID	SAME AS MAX SHEAR
MAX COMBINED - LOAD CASE ID	
MAX COMBINED - AXIAL LOAD [N]	
max combined - axial load [lb]	
MAX COMBINED - SHEAR LOAD [N]	
max combined - shear load [lb]	
FAIL SAFE CONFIGURATION SUMMARY OF MARGINS FOR BOLTS	
MOS CALCULATION - CONFIGURATION ID	FAIL SAFE
DIRECT TENSION ULTIMATE	74.28 (MAX AXIAL)
TOTAL TENSION ULTIMATE	0.98 (MAX AXIAL)
DIRECT THREAD SHEAR ULTIMATE	89.33 (MAX AXIAL)
TOTAL THREAD SHEAR ULTIMATE	1.38 (MAX AXIAL)
SHEAR ULTIMATE	5.88 (MAX SHEAR)
BENDING ULTIMATE	10 (MAX AXIAL)
COMBINED SHEAR, TENSION AND BENDING ULTIMATE	0.96 (MAX SHEAR)
FAIL SAFE CONFIGURATION MINIMUM ULTIMATE MOS	0.96
FAIL SAFE CONFIGURATION SUMMARY OF MARGINS FOR BEARING FLANGES	
FLANGE 1 - BEARING ULTIMATE	8.37
FLANGE 2 - BEARING ULTIMATE	22.52
FAIL SAFE CONFIGURATION MINIMUM MOS	FLANGE 1 - BEARING ULTIMATE

Table 9-8: JOINT 2a – fail safe configuration

Questo documento contiene informazioni di proprietà di CARLO GAVAZZI SPACE SpA. Tutti i diritti sono riservati.
All information contained in this document are property of CARLO GAVAZZI SPACE SpA. All right reserved.

FAIL SAFE CONFIGURATION IDENTIFICATION	
FAIL SAFE FAILED BOLT CONFIGURATION	FLIGHT
FAIL SAFE 1 FAILED BOLT ID	2396078

FAIL SAFE CONFIGURATION BOLT LOADS	
MAX AXIAL - ELEMENT ID	2341694
MAX AXIAL - LOAD CASE ID	9
MAX AXIAL - AXIAL LOAD [N]	1965.5
max axial - axial load [lb]	441.9
MAX AXIAL - SHEAR LOAD [N]	2176.0
max axial - shear load [lb]	489.2
MAX SHEAR - ELEMENT ID	2396039
MAX SHEAR - LOAD CASE ID	12
MAX SHEAR - AXIAL LOAD [N]	255.1
max shear - axial load [lb]	57.3
MAX SHEAR - SHEAR LOAD [N]	4383.1
max shear - shear load [lb]	985.4
MAX COMBINED - ELEMENT ID	SAME AS MAX SHEAR
MAX COMBINED - LOAD CASE ID	
MAX COMBINED - AXIAL LOAD [N]	
max combined - axial load [lb]	
MAX COMBINED - SHEAR LOAD [N]	
max combined - shear load [lb]	

FAIL SAFE CONFIGURATION SUMMARY OF MARGINS FOR BOLTS	
MOS CALCULATION - CONFIGURATION ID	FAIL SAFE
DIRECT TENSION ULTIMATE	9.44 (MAX AXIAL)
TOTAL TENSION ULTIMATE	0.9 (MAX AXIAL)
DIRECT THREAD SHEAR ULTIMATE	11.67 (MAX AXIAL)
TOTAL THREAD SHEAR ULTIMATE	1.3 (MAX AXIAL)
SHEAR ULTIMATE	1.59 (MAX SHEAR)
BENDING ULTIMATE	10 (MAX AXIAL)
COMBINED SHEAR, TENSION AND BENDING ULTIMATE	0.66 (MAX SHEAR)
FAIL SAFE CONFIGURATION MINIMUM ULTIMATE MOS	0.66

FAIL SAFE CONFIGURATION SUMMARY OF MARGINS FOR BEARING FLANGES	
FLANGE 1 - BEARING ULTIMATE	2.53
FLANGE 2 - BEARING ULTIMATE	7.44
FAIL SAFE CONFIGURATION MINIMUM MOS	FLANGE 1 - BEARING ULTIMATE

Table 9-9: JOINT 2b – fail safe configuration

Questo documento contiene informazioni di proprietà di CARLO GAVAZZI SPACE SpA. Tutti i diritti sono riservati.
All information contained in this document are property of CARLO GAVAZZI SPACE SpA. All right reserved.

9.2.4.3 JOINT 3: SPOKES (FAIL SAFE CONF.)

FAIL SAFE CONFIGURATION IDENTIFICATION	
FAIL SAFE FAILED BOLT CONFIGURATION	FLIGHT
FAIL SAFE 1 FAILED BOLT ID	4587529
FAIL SAFE CONFIGURATION BOLT LOADS	
MAX AXIAL - ELEMENT ID	4587645
MAX AXIAL - LOAD CASE ID	27
MAX AXIAL - AXIAL LOAD [N]	594.7
max axial - axial load [lb]	133.7
MAX AXIAL - SHEAR LOAD [N]	3.4
max axial - shear load [lb]	0.8
MAX SHEAR - ELEMENT ID	4588661
MAX SHEAR - LOAD CASE ID	29
MAX SHEAR - AXIAL LOAD [N]	117.7
max shear - axial load [lb]	26.5
MAX SHEAR - SHEAR LOAD [N]	33.6
max shear - shear load [lb]	7.5
MAX COMBINED - ELEMENT ID	SAME AS MAX AXIAL
MAX COMBINED - LOAD CASE ID	
MAX COMBINED - AXIAL LOAD [N]	
max combined - axial load [lb]	
MAX COMBINED - SHEAR LOAD [N]	
max combined - shear load [lb]	
FAIL SAFE CONFIGURATION SUMMARY OF MARGINS FOR BOLTS	
MOS CALCULATION - CONFIGURATION ID	FAIL SAFE
DIRECT TENSION ULTIMATE	13.71 (MAX AXIAL)
TOTAL TENSION ULTIMATE	0.46 (MAX AXIAL)
DIRECT THREAD SHEAR ULTIMATE	16.65 (MAX AXIAL)
TOTAL THREAD SHEAR ULTIMATE	0.75 (MAX AXIAL)
SHEAR ULTIMATE	230.75 (MAX SHEAR)
BENDING ULTIMATE	10 (MAX AXIAL)
COMBINED SHEAR, TENSION AND BENDING ULTIMATE	0.46 (MAX AXIAL)
FAIL SAFE CONFIGURATION MINIMUM ULTIMATE MOS	0.46
FAIL SAFE CONFIGURATION SUMMARY OF MARGINS FOR BEARING FLANGES	
FLANGE 1 - BEARING ULTIMATE	NA
FLANGE 2 - BEARING ULTIMATE	730.24
FAIL SAFE CONFIGURATION MINIMUM MOS	FLANGE 2 - BEARING ULTIMATE

Table 9-10: JOINT 3a – fail safe configuration

Questo documento contiene informazioni di proprietà di CARLO GAVAZZI SPACE SpA. Tutti i diritti sono riservati.
All information contained in this document are property of CARLO GAVAZZI SPACE SpA. All right reserved.

FAIL SAFE CONFIGURATION IDENTIFICATION	
FAIL SAFE FAILED BOLT CONFIGURATION	FLIGHT
FAIL SAFE 1 FAILED BOLT ID	6385997
FAIL SAFE CONFIGURATION BOLT LOADS	
MAX AXIAL - ELEMENT ID	6386117
MAX AXIAL - LOAD CASE ID	27
MAX AXIAL - AXIAL LOAD [N]	594.7
max axial - axial load [lb]	133.7
MAX AXIAL - SHEAR LOAD [N]	3.4
max axial - shear load [lb]	0.8
MAX SHEAR - ELEMENT ID	6387167
MAX SHEAR - LOAD CASE ID	29
MAX SHEAR - AXIAL LOAD [N]	117.7
max shear - axial load [lb]	26.5
MAX SHEAR - SHEAR LOAD [N]	33.6
max shear - shear load [lb]	7.5
MAX COMBINED - ELEMENT ID	SAME AS MAX AXIAL
MAX COMBINED - LOAD CASE ID	
MAX COMBINED - AXIAL LOAD [N]	
max combined - axial load [lb]	
MAX COMBINED - SHEAR LOAD [N]	
max combined - shear load [lb]	
FAIL SAFE CONFIGURATION SUMMARY OF MARGINS FOR BOLTS	
MOS CALCULATION - CONFIGURATION ID	FAIL SAFE
DIRECT TENSION ULTIMATE	25.96 (MAX AXIAL)
TOTAL TENSION ULTIMATE	0.53 (MAX AXIAL)
DIRECT THREAD SHEAR ULTIMATE	25.13 (MAX AXIAL)
TOTAL THREAD SHEAR ULTIMATE	0.48 (MAX AXIAL)
SHEAR ULTIMATE	265.13 (MAX SHEAR)
BENDING ULTIMATE	10 (MAX AXIAL)
COMBINED SHEAR, TENSION AND BENDING ULTIMATE	0.53 (MAX AXIAL)
FAIL SAFE CONFIGURATION MINIMUM ULTIMATE MOS	0.48
FAIL SAFE CONFIGURATION SUMMARY OF MARGINS FOR BEARING FLANGES	
FLANGE 1 - BEARING ULTIMATE	NA
FLANGE 2 - BEARING ULTIMATE	1221.65
FAIL SAFE CONFIGURATION MINIMUM MOS	FLANGE 2 - BEARING ULTIMATE

Table 9-11: JOINT 3b – fail safe configuration

Questo documento contiene informazioni di proprietà di CARLO GAVAZZI SPACE SpA. Tutti i diritti sono riservati.
All information contained in this document are property of CARLO GAVAZZI SPACE SpA. All right reserved.

9.2.4.4 JOINT 4: GPS ANTENNA SUPPORT/TRD (FAIL SAFE CONF.)

FAIL SAFE CONFIGURATION IDENTIFICATION	
FAIL SAFE FAILED BOLT CONFIGURATION	FLIGHT
FAIL SAFE 1 FAILED BOLT ID	2341620
FAIL SAFE CONFIGURATION BOLT LOADS	
MAX AXIAL - ELEMENT ID	2377968
MAX AXIAL - LOAD CASE ID	6
MAX AXIAL - AXIAL LOAD [N]	734.0
max axial - axial load [lb]	165.0
MAX AXIAL - SHEAR LOAD [N]	739.9
max axial - shear load [lb]	166.3
MAX SHEAR - ELEMENT ID	2341641
MAX SHEAR - LOAD CASE ID	2
MAX SHEAR - AXIAL LOAD [N]	299.3
max shear - axial load [lb]	67.3
MAX SHEAR - SHEAR LOAD [N]	1551.5
max shear - shear load [lb]	348.8
MAX COMBINED - ELEMENT ID	SAME AS MAX SHEAR
MAX COMBINED - LOAD CASE ID	
MAX COMBINED - AXIAL LOAD [N]	
max combined - axial load [lb]	
MAX COMBINED - SHEAR LOAD [N]	
max combined - shear load [lb]	
FAIL SAFE CONFIGURATION SUMMARY OF MARGINS FOR BOLTS	
MOS CALCULATION - CONFIGURATION ID	FAIL SAFE
DIRECT TENSION ULTIMATE	26.95 (MAX AXIAL)
TOTAL TENSION ULTIMATE	0.93 (MAX AXIAL)
DIRECT THREAD SHEAR ULTIMATE	32.91 (MAX AXIAL)
TOTAL THREAD SHEAR ULTIMATE	1.34 (MAX AXIAL)
SHEAR ULTIMATE	6.32 (MAX SHEAR)
BENDING ULTIMATE	10 (MAX AXIAL)
COMBINED SHEAR, TENSION AND BENDING ULTIMATE	0.92 (MAX SHEAR)
FAIL SAFE CONFIGURATION MINIMUM ULTIMATE MOS	0.92
FAIL SAFE CONFIGURATION SUMMARY OF MARGINS FOR BEARING FLANGES	
FLANGE 1 - BEARING ULTIMATE	14.02
FLANGE 2 - BEARING ULTIMATE	18.45
FAIL SAFE CONFIGURATION MINIMUM MOS	FLANGE 1 - BEARING ULTIMATE

Table 9-12: JOINT 4 – fail safe configuration

Questo documento contiene informazioni di proprietà di CARLO GAVAZZI SPACE SpA. Tutti i diritti sono riservati.
All information contained in this document are property of CARLO GAVAZZI SPACE SpA. All right reserved.

9.2.4.5 JOINT 5: GPS ANTENNA/GPS ANTENNA SUPPORT (FAIL SAFE CONF.)

FAIL SAFE CONFIGURATION IDENTIFICATION	
FAIL SAFE FAILED BOLT CONFIGURATION	FLIGHT
FAIL SAFE 1 FAILED BOLT ID	2377917

FAIL SAFE CONFIGURATION BOLT LOADS	
MAX AXIAL - ELEMENT ID	2377888
MAX AXIAL - LOAD CASE ID	8
MAX AXIAL - AXIAL LOAD [N]	68.3
max axial - axial load [lb]	15.3
MAX AXIAL - SHEAR LOAD [N]	70.8
max axial - shear load [lb]	15.9
MAX SHEAR - ELEMENT ID	2377842
MAX SHEAR - LOAD CASE ID	2
MAX SHEAR - AXIAL LOAD [N]	15.1
max shear - axial load [lb]	3.4
MAX SHEAR - SHEAR LOAD [N]	116.7
max shear - shear load [lb]	26.2
MAX COMBINED - ELEMENT ID	2377888
MAX COMBINED - LOAD CASE ID	11
MAX COMBINED - AXIAL LOAD [N]	68.1
max combined - axial load [lb]	15.3
MAX COMBINED - SHEAR LOAD [N]	88.1
max combined - shear load [lb]	19.8

FAIL SAFE CONFIGURATION SUMMARY OF MARGINS FOR BOLTS	
MOS CALCULATION - CONFIGURATION ID	FAIL SAFE
DIRECT TENSION ULTIMATE	34.59 (MAX AXIAL)
TOTAL TENSION ULTIMATE	1.28 (MAX AXIAL)
DIRECT THREAD SHEAR ULTIMATE	55.08 (MAX AXIAL)
TOTAL THREAD SHEAR ULTIMATE	2.59 (MAX AXIAL)
SHEAR ULTIMATE	9.73 (MAX SHEAR)
BENDING ULTIMATE	10 (MAX AXIAL)
COMBINED SHEAR, TENSION AND BENDING ULTIMATE	1.27 (COMBINED)
FAIL SAFE CONFIGURATION MINIMUM ULTIMATE MOS	1.27

FAIL SAFE CONFIGURATION SUMMARY OF MARGINS FOR BEARING FLANGES	
FLANGE 1 - BEARING ULTIMATE	36.10
FLANGE 2 - BEARING ULTIMATE	58.43
FAIL SAFE CONFIGURATION MINIMUM MOS	FLANGE 1 - BEARING ULTIMATE

Table 9-13: JOINT 5 – fail safe configuration

Questo documento contiene informazioni di proprietà di CARLO GAVAZZI SPACE SpA. Tutti i diritti sono riservati.
All information contained in this document are property of CARLO GAVAZZI SPACE SpA. All right reserved.

9.2.4.6 JOINT 6: VSB - VACUUM CASE (FAIL SAFE CONF.)

FAIL SAFE CONFIGURATION IDENTIFICATION	
FAIL SAFE FAILED BOLT CONFIGURATION	FLIGHT
FAIL SAFE 1 FAILED BOLT ID	5511888
FAIL SAFE CONFIGURATION BOLT LOADS	
MAX AXIAL - ELEMENT ID	5511464
MAX AXIAL - LOAD CASE ID	23
MAX AXIAL - AXIAL LOAD [N]	1486.9
max axial - axial load [lb]	334.3
MAX AXIAL - SHEAR LOAD [N]	152.9
max axial - shear load [lb]	34.4
MAX SHEAR - ELEMENT ID	5511464
MAX SHEAR - LOAD CASE ID	4
MAX SHEAR - AXIAL LOAD [N]	699.3
max shear - axial load [lb]	157.2
MAX SHEAR - SHEAR LOAD [N]	559.0
max shear - shear load [lb]	125.7
MAX COMBINED - ELEMENT ID	SAME AS MAX AXIAL
MAX COMBINED - LOAD CASE ID	
MAX COMBINED - AXIAL LOAD [N]	
max combined - axial load [lb]	
MAX COMBINED - SHEAR LOAD [N]	
max combined - shear load [lb]	
FAIL SAFE CONFIGURATION SUMMARY OF MARGINS FOR BOLTS	
MOS CALCULATION - CONFIGURATION ID	FAIL SAFE
DIRECT TENSION ULTIMATE	16.18 (MAX AXIAL)
TOTAL TENSION ULTIMATE	0.77 (MAX AXIAL)
DIRECT THREAD SHEAR ULTIMATE	23.85 (MAX AXIAL)
TOTAL THREAD SHEAR ULTIMATE	1.56 (MAX AXIAL)
SHEAR ULTIMATE	24.24 (MAX SHEAR)
BENDING ULTIMATE	10 (MAX AXIAL)
COMBINED SHEAR, TENSION AND BENDING ULTIMATE	0.77 (MAX AXIAL)
FAIL SAFE CONFIGURATION MINIMUM ULTIMATE MOS	0.77
FAIL SAFE CONFIGURATION SUMMARY OF MARGINS FOR BEARING FLANGES	
FLANGE 1 - BEARING ULTIMATE	61.46
FLANGE 2 - BEARING ULTIMATE	131.34
FAIL SAFE CONFIGURATION MINIMUM MOS	FLANGE 1 - BEARING ULTIMATE

Table 9-14: JOINT 6 – fail safe configuration

Questo documento contiene informazioni di proprietà di CARLO GAVAZZI SPACE SpA. Tutti i diritti sono riservati.
All information contained in this document are property of CARLO GAVAZZI SPACE SpA. All right reserved.

9.2.4.7 JOINT 7: VSB BODY / LHP VSB BKT (FAIL SAFE CONF.)

FAIL SAFE CONFIGURATION IDENTIFICATION	
FAIL SAFE FAILED BOLT CONFIGURATION	FLIGHT
FAIL SAFE 1 FAILED BOLT ID	2083341

FAIL SAFE CONFIGURATION BOLT LOADS	
MAX AXIAL - ELEMENT ID	2083342
MAX AXIAL - LOAD CASE ID	1
MAX AXIAL - AXIAL LOAD [N]	101.1
max axial - axial load [lb]	22.7
MAX AXIAL - SHEAR LOAD [N]	163.6
max axial - shear load [lb]	36.8
MAX SHEAR - ELEMENT ID	2083340
MAX SHEAR - LOAD CASE ID	29
MAX SHEAR - AXIAL LOAD [N]	40.7
max shear - axial load [lb]	9.2
MAX SHEAR - SHEAR LOAD [N]	825.9
max shear - shear load [lb]	185.7
MAX COMBINED - ELEMENT ID	SAME AS MAX AXIAL
MAX COMBINED - LOAD CASE ID	
MAX COMBINED - AXIAL LOAD [N]	
max combined - axial load [lb]	
MAX COMBINED - SHEAR LOAD [N]	
max combined - shear load [lb]	

FAIL SAFE CONFIGURATION SUMMARY OF MARGINS FOR BOLTS	
MOS CALCULATION - CONFIGURATION ID	FAIL SAFE
DIRECT TENSION ULTIMATE	19.13 (COMBINED)
TOTAL TENSION ULTIMATE	0.69 (COMBINED)
DIRECT THREAD SHEAR ULTIMATE	23.16 (COMBINED)
TOTAL THREAD SHEAR ULTIMATE	1.03 (COMBINED)
SHEAR ULTIMATE	1.53 (MAX SHEAR)
BENDING ULTIMATE	10 (MAX AXIAL)
COMBINED SHEAR, TENSION AND BENDING ULTIMATE	0.53 (MAX SHEAR)
FAIL SAFE CONFIGURATION MINIMUM ULTIMATE MOS	0.53

FAIL SAFE CONFIGURATION SUMMARY OF MARGINS FOR BEARING FLANGES	
FLANGE 1 - BEARING ULTIMATE	1.07
FLANGE 2 - BEARING ULTIMATE	4.47
FAIL SAFE CONFIGURATION MINIMUM MOS	FLANGE 1 - BEARING ULTIMATE

Table 9-15: JOINT 7 – fail safe configuration

Questo documento contiene informazioni di proprietà di CARLO GAVAZZI SPACE SpA. Tutti i diritti sono riservati.
All information contained in this document are property of CARLO GAVAZZI SPACE SpA. All right reserved.

9.2.4.8 JOINT 8: VSB SUPPORTS/ LHP VSB STAND-OFF (FAIL SAFE CONF.)

FAIL SAFE CONFIGURATION IDENTIFICATION	
FAIL SAFE FAILED BOLT CONFIGURATION	FLIGHT
FAIL SAFE 1 FAILED BOLT ID	2186038
FAIL SAFE CONFIGURATION BOLT LOADS	
MAX AXIAL - ELEMENT ID	2186039
MAX AXIAL - LOAD CASE ID	8
MAX AXIAL - AXIAL LOAD [N]	127.0
max axial - axial load [lb]	28.6
MAX AXIAL - SHEAR LOAD [N]	139.2
max axial - shear load [lb]	31.3
MAX SHEAR - ELEMENT ID	2186039
MAX SHEAR - LOAD CASE ID	1
MAX SHEAR - AXIAL LOAD [N]	119.2
max shear - axial load [lb]	26.8
MAX SHEAR - SHEAR LOAD [N]	158.2
max shear - shear load [lb]	35.6
MAX COMBINED - ELEMENT ID	SAME AS MAX AXIAL
MAX COMBINED - LOAD CASE ID	
MAX COMBINED - AXIAL LOAD [N]	
max combined - axial load [lb]	
MAX COMBINED - SHEAR LOAD [N]	
max combined - shear load [lb]	
FAIL SAFE CONFIGURATION SUMMARY OF MARGINS FOR BOLTS	
MOS CALCULATION - CONFIGURATION ID	FAIL SAFE
DIRECT TENSION ULTIMATE	57.02 (MAX AXIAL)
TOTAL TENSION ULTIMATE	1.17 (MAX AXIAL)
DIRECT THREAD SHEAR ULTIMATE	83.02 (MAX AXIAL)
TOTAL THREAD SHEAR ULTIMATE	2.14 (MAX AXIAL)
SHEAR ULTIMATE	23.52 (MAX SHEAR)
BENDING ULTIMATE	10 (MAX AXIAL)
COMBINED SHEAR, TENSION AND BENDING ULTIMATE	1.17 (MAX AXIAL)
FAIL SAFE CONFIGURATION MINIMUM ULTIMATE MOS	1.17
FAIL SAFE CONFIGURATION SUMMARY OF MARGINS FOR BEARING FLANGES	
FLANGE 1 - BEARING ULTIMATE	18.26
FLANGE 2 - BEARING ULTIMATE	116.69
FAIL SAFE CONFIGURATION MINIMUM MOS	FLANGE 1 - BEARING ULTIMATE

Table 9-16: JOINT 8 – fail safe configuration

Questo documento contiene informazioni di proprietà di CARLO GAVAZZI SPACE SpA. Tutti i diritti sono riservati.
All information contained in this document are property of CARLO GAVAZZI SPACE SpA. All right reserved.

9.2.4.9 JOINT 9: VSB BODY/VSB COVER (FAIL SAFE CONF.)

FAIL SAFE CONFIGURATION IDENTIFICATION	
FAIL SAFE FAILED BOLT CONFIGURATION	FLIGHT
FAIL SAFE 1 FAILED BOLT ID	2083379
FAIL SAFE CONFIGURATION BOLT LOADS	
MAX AXIAL - ELEMENT ID	2083381
MAX AXIAL - LOAD CASE ID	7
MAX AXIAL - AXIAL LOAD [N]	11.5
max axial - axial load [lb]	2.6
MAX AXIAL - SHEAR LOAD [N]	667.0
max axial - shear load [lb]	149.9
MAX SHEAR - ELEMENT ID	2083381
MAX SHEAR - LOAD CASE ID	2
MAX SHEAR - AXIAL LOAD [N]	11.5
max shear - axial load [lb]	2.6
MAX SHEAR - SHEAR LOAD [N]	667.0
max shear - shear load [lb]	149.9
MAX COMBINED - ELEMENT ID	SAME AS MAX AXIAL
MAX COMBINED - LOAD CASE ID	
MAX COMBINED - AXIAL LOAD [N]	
max combined - axial load [lb]	
MAX COMBINED - SHEAR LOAD [N]	
max combined - shear load [lb]	
FAIL SAFE CONFIGURATION SUMMARY OF MARGINS FOR BOLTS	
MOS CALCULATION - CONFIGURATION ID	FAIL SAFE
DIRECT TENSION ULTIMATE	501.86 (MAX AXIAL)
TOTAL TENSION ULTIMATE	1.01 (MAX AXIAL)
DIRECT THREAD SHEAR ULTIMATE	602.43 (MAX AXIAL)
TOTAL THREAD SHEAR ULTIMATE	1.41 (MAX AXIAL)
SHEAR ULTIMATE	3.59 (MAX AXIAL)
BENDING ULTIMATE	10 (MAX AXIAL)
COMBINED SHEAR, TENSION AND BENDING ULTIMATE	0.93 (MAX AXIAL)
FAIL SAFE CONFIGURATION MINIMUM ULTIMATE MOS	0.93
FAIL SAFE CONFIGURATION SUMMARY OF MARGINS FOR BEARING FLANGES	
FLANGE 1 - BEARING ULTIMATE	5.96
FLANGE 2 - BEARING ULTIMATE	5.96
FAIL SAFE CONFIGURATION MINIMUM MOS	FLANGE 2 - BEARING ULTIMATE

Table 9-17: JOINT 9 – fail safe configuration

Questo documento contiene informazioni di proprietà di CARLO GAVAZZI SPACE SpA. Tutti i diritti sono riservati.
All information contained in this document are property of CARLO GAVAZZI SPACE SpA. All right reserved.

9.2.4.10 JOINT 10: JOINT 10: BIMETALLIC SUPPORT BKT/RADIATOR (FAIL SAFE CONF.)

FAIL SAFE CONFIGURATION IDENTIFICATION	
FAIL SAFE FAILED BOLT CONFIGURATION	FLIGHT
FAIL SAFE 1 FAILED BOLT ID	2B2
FAIL SAFE CONFIGURATION BOLT LOADS	
MAX AXIAL - ELEMENT ID	2533841
MAX AXIAL - LOAD CASE ID	28
MAX AXIAL - AXIAL LOAD [N]	77.2
max axial - axial load [lb]	17.4
MAX AXIAL - SHEAR LOAD [N]	0.0
max axial - shear load [lb]	0.0
MAX SHEAR - ELEMENT ID	2526848
MAX SHEAR - LOAD CASE ID	3
MAX SHEAR - AXIAL LOAD [N]	8.8
max shear - axial load [lb]	2.0
MAX SHEAR - SHEAR LOAD [N]	640.0
max shear - shear load [lb]	143.9
MAX COMBINED - ELEMENT ID	SAME AS MAX SHEAR
MAX COMBINED - LOAD CASE ID	
MAX COMBINED - AXIAL LOAD [N]	
max combined - axial load [lb]	
MAX COMBINED - SHEAR LOAD [N]	
max combined - shear load [lb]	
FAIL SAFE CONFIGURATION SUMMARY OF MARGINS FOR BOLTS	
MOS CALCULATION - CONFIGURATION ID	FAIL SAFE
DIRECT TENSION ULTIMATE	143.68 (MAX AXIAL)
TOTAL TENSION ULTIMATE	1.02 (MAX AXIAL)
DIRECT THREAD SHEAR ULTIMATE	187.6 (MAX AXIAL)
TOTAL THREAD SHEAR ULTIMATE	1.63 (MAX AXIAL)
SHEAR ULTIMATE	8.56 (MAX SHEAR)
BENDING ULTIMATE	10 (MAX AXIAL)
COMBINED SHEAR, TENSION AND BENDING ULTIMATE	1.02 (MAX AXIAL)
FAIL SAFE CONFIGURATION MINIMUM ULTIMATE MOS	1.02
FAIL SAFE CONFIGURATION SUMMARY OF MARGINS FOR BEARING FLANGES	
FLANGE 1 - BEARING ULTIMATE	4.99
FLANGE 2 - BEARING ULTIMATE	50.01
FAIL SAFE CONFIGURATION MINIMUM MOS	FLANGE 1 - BEARING ULTIMATE

Table 9-18: JOINT 10 – fail safe configuration

Questo documento contiene informazioni di proprietà di CARLO GAVAZZI SPACE SpA. Tutti i diritti sono riservati.
All information contained in this document are property of CARLO GAVAZZI SPACE SpA. All right reserved.

9.2.4.11 JOINT 11: VSB SUPPORTS/VSB BODY (FAIL SAFE CONF.)

FAIL SAFE CONFIGURATION IDENTIFICATION	
FAIL SAFE FAILED BOLT CONFIGURATION	FLIGHT
FAIL SAFE FAILED BOLT ID	2083165
FAIL SAFE CONFIGURATION BOLT LOADS	
MAX AXIAL - ELEMENT ID	2081820
MAX AXIAL - LOAD CASE ID	7
MAX AXIAL - AXIAL LOAD [N]	147.6
max axial - axial load [lb]	33.2
MAX AXIAL - SHEAR LOAD [N]	10.2
max axial - shear load [lb]	2.3
MAX SHEAR - ELEMENT ID	2083167
MAX SHEAR - LOAD CASE ID	6
MAX SHEAR - AXIAL LOAD [N]	126.0
max shear - axial load [lb]	28.3
MAX SHEAR - SHEAR LOAD [N]	1108.2
max shear - shear load [lb]	249.1
MAX COMBINED - ELEMENT ID	SAME AS MAX SHEAR
MAX COMBINED - LOAD CASE ID	
MAX COMBINED - AXIAL LOAD [N]	
max combined - axial load [lb]	
MAX COMBINED - SHEAR LOAD [N]	
max combined - shear load [lb]	
FAIL SAFE CONFIGURATION SUMMARY OF MARGINS FOR BOLTS	
MOS CALCULATION - CONFIGURATION ID	FAIL SAFE
AXIAL ULTIMATE	18.09 (MAX AXIAL)
SHEAR ULTIMATE	4.39 (MAX SHEAR)
FAIL SAFE CONFIGURATION MINIMUM ULTIMATE MOS	4.39

Table 9-19: JOINT 11 – fail safe configuration

Questo documento contiene informazioni di proprietà di CARLO GAVAZZI SPACE SpA. Tutti i diritti sono riservati.
All information contained in this document are property of CARLO GAVAZZI SPACE SpA. All right reserved.

9.2.4.12 JOINT ANALYSIS MOS SUMMARY FOR FAIL SAFE CONFIGURATION

In the following tables MoS summary for fail safe joint analysis is presented.

BOLTED JUNCTION (Joint 1-10)		
MOS TYPE	**MoS**	**Joint**
DIRECT TENSION ULTIMATE	4.81	1B
TOTAL TENSION ULTIMATE	0.46	3A
DIRECT THREAD SHEAR ULTIMATE	6.58	1B
TOTAL THREAD SHEAR ULTIMATE	0.48	3B
SHEAR ULTIMATE	1.43	1B
COMBINED SHEAR, TENSION AND BENDING ULTIMATE	0.46	3A
FLANGE 1 - BEARING ULTIMATE	1.07	7
FLANGE 2 - BEARING ULTIMATE	4.47	7

RIVETS (Joint 11)	
MOS TYPE	**MoS**
AXIAL ULTIMATE	18.09
SHEAR ULTIMATE	4.39

Table 9-20: Joint analysis MoS summary in fail safe configuration

Questo documento contiene informazioni di proprietà di CARLO GAVAZZI SPACE SpA. Tutti i diritti sono riservati.
All information contained in this document are property of CARLO GAVAZZI SPACE SpA. All right reserved.

9.2.5 INSERTS VERIFICATION FOR FAIL SAFE CONFIGURATION

From the fail safe bolt analysis (chp.9.2.4) the inserts maximum axial and shear forces are determined.
The following table summarizes the force entities and locations.

CONNECTED ITEMS	FORCE [N]	REMARKS
Z bracket-Zenith Radiator	964.9	Maximum Axial Force acting on inserts
Stiff Bracket-Zenith Radiator	1652	Maximum Shear Force acting on inserts

Table 9-21 Maximum forces acting on the Zenith radiator Inserts for Fail Safe configuration

As described in the chp. 8.2.5.1 these forces have been compared to the inserts test results of RD 19.
The following table summarizes the obtained MoS.

DESCRIPTION	VALUE	REMARKS
Safety Factor for insert verification fail safe configuration	1	
Axial Allowable Force [N]	1900	RD 19
Shear Allowable Force [N]	6498	RD 19
Applied Max. Axial Force [N]	964.9	Chp. 9.2.4.1
Applied Max. Shear Force [N]	1652	Chp. 9.2.4.2
MoS_{AXIAL}	**0.97**	
MoS_{SHEAR}	**2.93**	

Table 9-22 Zenith Radiator Insert verification summary

9.2.5.1 INSERTS MOS SUMMARY FOR FAIL SAFE CONFIGURATION

MARGIN OF SAFETY FOR INSERTS FOR FAIL SAFE CONFIGURATION							
ITEMS	Load Case	ID	Force	SF	Allowable Force [N]	MoS	Note
Inserts	8	213906	964.9	1	1900	0.97	Maximum axial load case
	4	227031	1652	1	6480	2.93	Maximum shear load case

Table 9-23: MOS summary table for inserts for Fail Safe configuration

Questo documento contiene informazioni di proprietà di CARLO GAVAZZI SPACE SpA. Tutti i diritti sono riservati.
All information contained in this document are property of CARLO GAVAZZI SPACE SpA. All right reserved.

10.CONCLUSIONS AND COMMENTS

The performed analyses of the CRYO TCS system and VSB Structure show the following results.

A. NOMINAL CONFIGURATION

- The 1st natural frequency of the CRYO TCS system and VSB is 50.4 Hz, see chapter 8.1 DYNAMIC ANALYSIS FOR NOMINAL CONFIGURATION.
- Maximum displacement for the CRYO TCS system and VSB for all the applied loads is 19.4 mm (on the LHP transport line), see chapter 8.2.1 DISPLACEMENT ANALYSIS FOR NOMINAL CONFIGURATION.
- All MoS are positive for all applied loads for the stress analysis, see chapter 8.2.2 STRESS ANALYSIS FOR NOMINAL CONFIGURATION.
- All MoS are positive for all applied loads for the joint analysis, see chapter 8.2.3 JOINT ANALYSIS FOR NOMINAL CONFIGURATION.
- All MoS are positive for all applied loads for the instability (buckling) analysis at local level, see chapter 8.2.4 LOCAL BUCKLING ANALYSIS FOR NOMINAL CONFIGURATION
- All MoS are positive for all applied loads for the inserts and bonded junction, see chapter 8.2.5 INSERTS AND BONDED JOINT VERIFICATION FOR NOMINAL CONFIGURATION
- All MoS are positive for all applied loads for the bimetallic joint, see chapter 8.2.6 BIMETALLIC JOINT VERIFICATION

B. FAIL SAFE CONFIGURATION

- One fail safe configuration is defined for CRYO TCS system and VSB structure.
- The relevant modal discrepancies in the modal results between the nominal configuration and the fail safe one have been detected. Static analyses have been performed to check the fail safe configuration structural integrity chapter 9.1 DYNAMIC ANALYSIS FOR FAIL SAFE CONFIGURATION. All MoS are positive for all applied loads in the fail safe configuration for the stress analysis, see chapter 9.2 STATIC ANALYSIS FOR FAIL SAFE CONFIGURATION.
- All MoS are positive for all applied loads for the joint analysis, see chapter 9.2.4 JOINT ANALYSIS FOR FAIL SAFE CONFIGURATION.
- All MoS are positive for all applied loads for the insert analysis, see chapter 9.2.5 INSERTS VERIFICATION FOR FAIL SAFE CONFIGURATION.

Moreover, the following topics are shown.

- An explanation of the complete methodology for the bolt analysis is shown in ANNEX 1.
- The tables with the input for the safety review are shown in ANNEX 2.

Results of all the performed analyses show that the CRYO TCS system and VSB structure can withstand the dimensioning loads without any rupture and/or any detrimental deformation with the application of the specified safety factors: all structural requirements shown in AD 1 are fulfilled.

Questo documento contiene informazioni di proprietà di CARLO GAVAZZI SPACE SpA. Tutti i diritti sono riservati.
All information contained in this document are property of CARLO GAVAZZI SPACE SpA. All right reserved.

ANNEX 1

BOLTS VERIFICATION EXAMPLE

Two different bolt verification typologies are shown:

1. The 1st one refers to the installation with inserts
2. The 2nd one refers to the installation with nuts.

Questo documento contiene informazioni di proprietà di CARLO GAVAZZI SPACE SpA. Tutti i diritti sono riservati.
All information contained in this document are property of CARLO GAVAZZI SPACE SpA. All right reserved.

Installation with inserts

Prepared By	C. Bala 10/7/04	LOCKHEED MARTIN Science, Engineering, Analysis, & Test Mechanical Systems Analysis Department	Page No.	Report No. LMSEAT-0005
Checked By			Drawing No.	
Title	Project Name	Bolt sample with insert	File name:	bolts_insert_RevC

BOLTS (NAS1351N3LE10), Insert MS21209 F1-15L, Washer NAS620C10L

Flange 1
Part number: Z BKT
Material:GFRP

Flange 2
Part number:TRD
Material: AL 7075 T7351

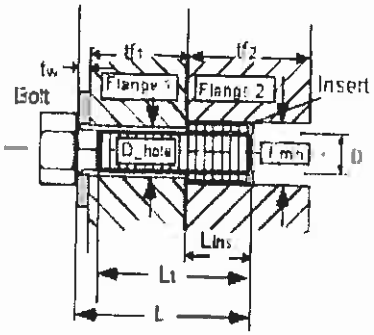

Loads

Applied tensile load $P := 190.3\,lbf$

Applied shear load $V := 128.5\,lbf$

Applied bending moment $M := 0 \cdot in \cdot lbf$

Factors of Safety

Ultimate $SFu := 2.0$ Yield $SFy := 1.25$

Joint Separation $SFsep := 1.2$ Fitting factor $FF := 1.15$

Temperature data

Assembly $Temp_initial := 68 \cdot deg$

Maximum $Temp_max := 122 \cdot deg$

Minimum $Temp_min := 32 \cdot deg$

Bolt and Insert Data

Nominal diameter of bolt $D := 0.19\,in$

Number of threads/inch $Nt := 32 \cdot \frac{1}{in}$

Total length of bolt $L := 0.625\,in$

Length of insert $Lins := 0.285\,in$

Threaded length $Lt := 0.625\,in$

Min. external diameter of insert $Fmin := 0.236\,in$

(If bolt is fully threaded, input Lt = L)

Depth of recess for insert $lr := 0.02 \cdot in$

Reference:E:\PROGETTI\AMS_ZENITH_RAD\ZENITH_RADIATOR\final analysis\SPOKES_2_PL_GFRP\Verifica bulloni\thread_data.mcd

Washer Data

Thickness of washer $tw := 0.032\,in$

Outer Diameter of washer $Dw := 0.354\,in$

Inner Diameter of washer $Dwi := 0.195\,in$

Bolt head dia. across flats $dw := 0.31 \cdot in$ (used only if there is no washer)

Flange data

Thickness of flange 1 $tf1 := 0.157\,in$

Thickness of flange 2 $tf2 := 0.285\,in$

Diameter of hole $D_hole := 0.21 \cdot in$

Note: If there is no washer, tw, Dw, and Dwi should be zero.

Questo documento contiene informazioni di proprietà di CARLO GAVAZZI SPACE SpA. Tutti i diritti sono riservati.
All information contained in this document are property of CARLO GAVAZZI SPACE SpA. All right reserved.

Prepared By	C. Bala 10/7/04	LOCKHEED MARTIN Science, Engineering, Analysis, & Test Mechanical Systems Analysis Department	Page No.	Report No. LMSEAT-0005
Checked By			Drawing No.	
Title	Project Name	Bolt sample with insert	File name:	bolts_insert_RevC

Material Property Data

Bolt

Temperature correction factor for bolt strength ultimate $TSu_bolt := 0.94$ yield $TSy_bolt := 0.94$

Bolt ultimate tensile allowable stress $Ftu_bolt := 160000psi$

Bolt ultimate shear allowable stress $Fsu_bolt := 0.6 \cdot Ftu_bolt$

Bolt yield tensile allowable $Fty_bolt := 110000psi$

Temperature correction factor for bolt modulus $TE_bolt := 0.94$

Modulus of elasticity of bolt $E_bolt := \left(29.1 \cdot 10^{6} \cdot psi\right)$ Thermal coeffecient for bolt: $\alpha_bolt_hot := 8.7 \cdot 10^{-6} \cdot \frac{\frac{in}{in}}{deg}$

Insert

$\alpha_bolt_cold := 8.5 \cdot 10^{-6} \cdot \frac{\frac{in}{in}}{deg}$

Temperature correction factor for insert strength $TS_ins := 1$

Ultimate tensile allowable stress $Ftu_ins := 150000psi$

Ultimate shear allowable stress $Fsu_ins := 0.6 \cdot Ftu_ins$

Washer

Temperature correction factor for washer modulus $TE_washer := 1.0$

Modulus of elasticity of washer $E_washer := \left(29.1 \cdot 10^{6} \cdot psi\right)$

Flanges

Stiffness of the joint depends upon number of members in the grip of the fasteners, Modulus of elasticity of these members, and diameters of the bolt and the washer.

Temperature correction factor for flange 1 $Tf1E := 1.0$ (modulus) $Tf2s := 0.94$ (strength)

Temperature correction factor for flange 2 $Tf2E := 1.0$ (modulus) $Fsu_f2 := 37999.89psi$

Modulus of elasticity for the parts in the joint $E_flange1 := \left(5.9 \cdot 10^{6} \cdot psi\right)$ $E_flange2 := \left(10.5 \cdot 10^{6} \cdot psi\right)$

Coefficient of thermal expansion for flanges $\alpha_flange1_hot := 6 \cdot 10^{-6} \cdot \frac{\frac{in}{in}}{deg}$ $\alpha_flange2_hot := 12.15 \cdot 10^{-6} \cdot \frac{\frac{in}{in}}{deg}$

$\alpha_flange1_cold := 6 \cdot 10^{-6} \cdot \frac{\frac{in}{in}}{deg}$ $\alpha_flange2_cold := 12 \cdot 10^{-6} \cdot \frac{\frac{in}{in}}{deg}$

Torque/Preload data

Maximum torque $Tmax := 40 \cdot in \cdot lbf$ Loading plane factor: $n := 0.5$

Minimum torque $Tmin := 34 \cdot in \cdot lbf$ Preload Uncertainty: $\Gamma := 0.35$

Torque coefficient: $k := 0.2$

Questo documento contiene informazioni di proprietà di CARLO GAVAZZI SPACE SpA. Tutti i diritti sono riservati.
All information contained in this document are property of CARLO GAVAZZI SPACE SpA. All right reserved.

Prepared By	C. Bala 10/7/04	LOCKHEED MARTIN Science, Engineering, Analysis, & Test Mechanical Systems Analysis Department	Page No.	Report No LMSEAT-0005
Checked By			Drawing No	
Title	Project Name	Bolt sample with insert	File name:	bolts_insert_RevC

Reference:E:\PROGETTI\AMS_ZENITH_RAD\ZENITH_RADIATOR\final analysis\SPOKES_2_PL_GFRP\Verifica bulloni\bolt_ stiffness_insert_RevC.m

Bolt Load data

Bolt/joint stiffness factor	$\phi = 0.37$	Preload due to temperature	$Pthr_pos = 32lbf$
Max. preload	$PLDmax = 1453.1lbf$		$Pthr_neg = -22.9lbf$
Min. preload	$PLDmin = 487.6lbf$	Uncertainty factor	$\Gamma = 0.35$
Joint separation load	$Psep = 228.36lbf$	Torque coefficient	$k = 0.2$
Max. load on the bolt(ultimate)	$Pb = 1534lbf$	Loading plane factor	$n = 0.5$
Max. load on the bolt(yield)	$Pby = 1503.6lbf$	Thread shear pullout load of bolt or insert	$Pths = 9980.2lbf$
Bolt ultimate tensile strength	$PAt = 2895lbf$	Thread shear pullout load in parent metal	$Ppths = 3773.9lbf$

Length_check = "Bolt length is sufficient"

Summary of Margins for bolt:

Joint separation	$MS_1 = 1.28$	Direct Thread shear Ultimate	$MS_6 = 7.62$
Direct Tension Ultimate	$MS_2 = 5.61$	Total Thread shear Ultimate	$MS_7 = 1.46$
Direct Tension Yield	$MS_3 = 6.28$	Shear Ultimate	$MS_8 = 4.35$
Total Tension Ultimate	$MS_4 = 0.89$	Bending Ultimate	$MS_9 = 10$
Total Tension Yield	$MS_5 = 0.324$	Combined shear, tension and bending ultimate	$MS_{10} = 0.848$

$$Util_coeff := \frac{PLDmax100}{PAy} \qquad Util_coeff = 73.008$$

Determination of the smallest margin of safety for the bolt, and the failure mode:

$$MSbolt := \min(MS)$$

$MSbolt = 0.324$ Failure_Mode = "Total Tension Yield"

Questo documento contiene informazioni di proprietà di CARLO GAVAZZI SPACE SpA. Tutti i diritti sono riservati.
All information contained in this document are property of CARLO GAVAZZI SPACE SpA. All right reserved.

Prepared By	C. Bala 10/7/04	LOCKHEED MARTIN Science, Engineering, Analysis, & Test Mechanical Systems Analysis Department	Page No	Report No LMSEAT-0005
Checked By			Drawing No.	
Title	Project Name	Bolt sample with insert	File name:	bolts_insert_RevC

Fail-safe Analysis

Fail-safe Loads

Applied tensile load $P_FS := 190.3\,lbf$

Applied shear load $V_FS := 128.5\,lbf$

Applied bending moment $M_FS := 0\,in \cdot lbf$

Fail-safe Factors of Safety

Ultimate $SFu_FS := 1.0$

Joint Separation $SFsep_FS := 1.0$

Reference:E:\PROGETTI\AMS_ZENITH_RAD\ZENITH_RADIATOR\final analysis\SPOKES_2_PL_GFRP\Verifica bulloni\bolt_ stiffness_insert_FS_RevC.mcd

Bolt Fail-safe Load data

Joint separation load $Psep_FS = 190.3\,lbf$

Max. load on the bolt(ultimate) $Pb_FS = 1493.5\,lbf$

Summary of fail-safe Margins for bolt:

Joint separation	$MS_FS_1 = 1.73$	Total Thread shear Ultimate	$MS_FS_5 = 1.53$
Direct Tension Ultimate	$MS_FS_2 = 12.23$	Shear Ultimate	$MS_FS_6 = 9.71$
Total Tension Ultimate	$MS_FS_3 = 0.94$	Bending Ultimate	$MS_FS_7 = 10$
Direct Thread shear Ultimate	$MS_FS_4 = 16.24$	Combined shear, tension and bending ultimate	$MS_FS_8 = 0.93$

Determination of the smallest fail-safe margin of safety for the bolt, and the failure mode:

$MSbolt_FS := \min(MS_FS)$

$MSbolt_FS = 0.93$ Failure_Mode_FS = "Combined Shear Tension Bending Ultimate"

Questo documento contiene informazioni di proprietà di CARLO GAVAZZI SPACE SpA. Tutti i diritti sono riservati.
All information contained in this document are property of CARLO GAVAZZI SPACE SpA. All right reserved.

Installation with nuts

Prepared By	C. Bala 10/11/04	LOCKHEED MARTIN Science, Engineering, Analysis, & Test Mechanical Systems Analysis Department	Page No.	Report No. LMSEAT-0004
Checked By			Drawing No.	
Title	Project Name	Bolt sample with Nut	File name:	bolts_nut_RevC

CHECK BOLTS (NAS1351N3-16 @ 160 ksi), Anchor Nut MS21060L3, Washer NAS260C10L

Flange 1
Part number: Z BKT
Material: GFRP

Flange 2
Part number: RADIATOR I/F
Material: AL 7075 T7351

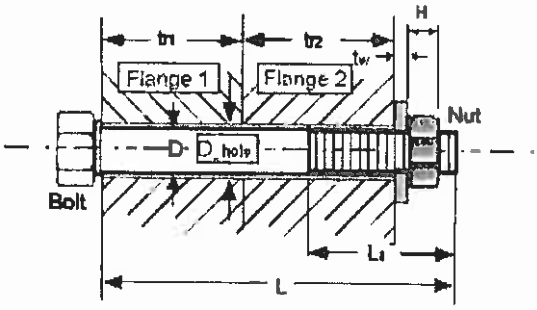

Loads

Applied tensile load	$P := 28.5 lbf$
Applied shear load	$V := 99.3 lbf$
Applied bending moment	$M := 0 in \cdot lbf$

Factors of Safety

Ultimate	$SFu := 2.0$	Yield	$SFy := 1.25$
Joint Separation	$SFsep := 1.2$	Fitting factor	$FF := 1.15$

Temperature data

Assembly	$Temp_initial := 68 \cdot deg$
Maximum	$Temp_max := 122 \cdot deg$
Minimum	$Temp_min := 32 \cdot deg$

Bolt and Nut Data

Nominal diameter of bolt	$D := 0.19 in$	Number of threads/inch	$Nt := 32 \cdot \frac{1}{in}$
Total length of bolt	$L := 1 \cdot in$	Height of nut	$H := 0.25 \cdot in$
Threaded length	$Lt := 1 \cdot in$		

(If bolt is fully threaded, input Lt = L)

Reference:E:\PROGETTI\AMS_ZENITH_RAD\ZENITH_RADIATOR\final analysis\SPOKES_2_PL_GFRP\Verifica bulloni\thread_data.mcd

Washer Data

Thickness of washers	$tw := 0.032 in$
Outer Diameter of washer	$Dw := 0.354 in$
Inner Diameter of washer	$Dwi := 0.195 in$
Bolt head dia. across flats	$dw := 0.430 in$ (used only if there is no washer)

Flange data

Thickness of flange 1	$tf1 := 0.157 in$
Thickness of flange 2	$tf2 := 0.394 in$
Diameter of hole	$D_hole := 0.195 in$

Note: If there is no washer tw, Dw and Dwi should be zero

Questo documento contiene informazioni di proprietà di CARLO GAVAZZI SPACE SpA. Tutti i diritti sono riservati.
All information contained in this document are property of CARLO GAVAZZI SPACE SpA. All right reserved.

Prepared By	C. Bala 10/11/04	LOCKHEED MARTIN Science, Engineering, Analysis, & Test Mechanical Systems Analysis Department	Page No.	Report No. LMSEAT-0004
Checked By			Drawing No.	
Title	Project Name	Bolt sample with Nut	File name:	bolts_nut_RevC

Material Property Data

Bolt

Temperature correction factor for bolt strength ultimate. $TSu_bolt := 0.94$ Yield $TSy_bolt := 0.94$

Bolt ultimate tensile allowable stress $Ftu_bolt := 160000psi$

Bolt ultimate shear allowable stress $Fsu_bolt := 0.6 \cdot Ftu_bolt$

Bolt yield Tensile allowable stress $Fty_bolt := 110000psi$

Temperature correction factor for bolt modulus $TE_bolt := 0.94$

Modulus of elasticity of bolt $E_bolt := (29.1 \cdot 10^6 \cdot psi)$ Thermal coeffecient for bolt $\alpha_bolt_hot := 9.1 \cdot 10^{-6} \cdot \frac{\frac{in}{in}}{deg}$

Nut

Temperature correction factor for nut strength $TS_nut := 0.94$ $\alpha_bolt_cold := 7.8 \cdot 10^{-6} \cdot \frac{\frac{in}{in}}{deg}$

Ultimate tensile allowable stress $Ftu_nut := 160000psi$

Ultimate Shear allowable stress: $Fsu_nut := 0.6 \cdot Ftu_nut$

Ultimate axial strength of nut $Ptu_nut := 8400lbf$

Washer

Temperature correction factor for washer modulus $TE_washer := 1.0$

Modulus of elasticity of washer: $E_washer := (29.1 \cdot 10^6 \cdot psi)$

Flanges

Stiffness of the joint depends upon number of members in the grip of the fasteners, Modulus of elasticity of these members, and diameters of the bolt and the washer.

Temperature correction factor for flange 1 $Tf1E := 1.0$ (modulus)

Temperature correction factor for flange 2 $Tf2E := 1.0$

Modulus of elasticity for the parts in the joint $E_flange1 := (5.9 \cdot 10^6 \cdot psi)$ $E_flange2 := (10.5 \cdot 10^6 \cdot psi)$

Coefficient of thermal expansion for flanges $\alpha_flange1_hot := 6 \cdot 10^{-6} \cdot \frac{\frac{in}{in}}{deg}$ $\alpha_flange2_hot := 12.15 \cdot 10^{-6} \cdot \frac{\frac{in}{in}}{deg}$

$\alpha_flange1_cold := 5.5 \cdot 10^{-6} \cdot \frac{\frac{in}{in}}{deg}$ $\alpha_flange2_cold := 11.5 \cdot 10^{-6} \cdot \frac{\frac{in}{in}}{deg}$

Torque/Preload data Maximum torque $Tmax := 40 \cdot in \cdot lbf$ Loading plane factor $n := 0.5$

Minimum torque $Tmin := 35in \cdot lbf$ Preload Uncertainty $\Gamma := 0.35$

Torque coefficient $k := 0.2$

Questo documento contiene informazioni di proprietà di CARLO GAVAZZI SPACE SpA. Tutti i diritti sono riservati.
All information contained in this document are property of CARLO GAVAZZI SPACE SpA. All right reserved.

Prepared By	C. Bala 10/11/04	LOCKHEED MARTIN Science, Engineering, Analysis, & Test Mechanical Systems Analysis Department	Page No	Report No. LMSEAT-0004
Checked By			Drawing No.	
Title	Project Name	Bolt sample with Nut	File name	bolts_nut_RevC

Reference:E:\PROGETTI\AMS_ZENITH_RAD\ZENITH_RADIATOR\final analysis\SPOKES_2_PL_GFRP\Verifica bulloni\bolt_ stiffness_nut_RevC.mcd

$FF = 1.15$

Bolt Load data

Bolt/joint stiffness factor	$\phi = 0.294$	Preload due to temperature	$Pthr_pos = 24.6lbf$
Max. preload	$PLDmax = 1445.7lbf$		$Pthr_neg = -25.2lbf$
Min. preload	$PLDmin = 502.5lbf$	Uncertainty factor	$\Gamma = 0.35$
Joint separation load	$Psep = 34.2lbf$	Torque coefficient	$k = 0.2$
Max. load on the bolt(ultimate)	$Pb = 1455.3lbf$	Loading plane factor	$n = 0.5$
Max. load on the bolt(yield)	$Pby = 1451.7lbf$	Thread pullout strength required to develop full strength of bolt	$PAs = 3474lbf$
Bolt ultimate tensile strength	$PAt = 2895lbf$	Nut ultimate tensile strength	$Ptu_nut = 7896lbf$

Length_check = "Bolt length is sufficient"

Summary of Margins for bolt:

Joint separation	$MS_1 = 13.98$	Direct Thread shear Ultimate	$MS_6 = 52$
Direct Tension Ultimate	$MS_2 = 43.16$	Total Thread shear Ultimate	$MS_7 = 1.39$
Direct Tension Yield	$MS_3 = 47.58$	Shear Ultimate	$MS_8 = 5.93$
Total Tension Ultimate	$MS_4 = 0.99$	Bending Ultimate	$MS_9 = 10$
Total Tension Yield	$MS_5 = 0.37$	Combined shear, tension and bending ultimate	$MS_{10} = 0.97$

$$Util_coeff := \frac{PLDmax \cdot 100}{PAy} \qquad Util_coeff = 72.635$$

Determination of the smallest margin of safety for the bolt, and the failure mode:

$$MSbolt := \min(MS)$$

$MSbolt = 0.37$ Failure_Mode = "Total Tension Yield"

Questo documento contiene informazioni di proprietà di CARLO GAVAZZI SPACE SpA. Tutti i diritti sono riservati.
All information contained in this document are property of CARLO GAVAZZI SPACE SpA. All right reserved.

Prepared By	C. Bala 10/11/04	LOCKHEED MARTIN Science, Engineering, Analysis, & Test Mechanical Systems Analysis Department	Page No	Report No. LMSEAT-0004
Checked By			Drawing No.	
Title	Project Name	Bolt sample with Nut	File name	bolts_nut_RevC

Fail-safe Analysis

Fail-safe Loads

Applied tensile load $P_FS := 217 \cdot lbf$

Applied shear load $V_FS := 47.6 \cdot lbf$

Applied bending moment $M_FS := 0 \cdot in \cdot lbf$

Fail-safe Factors of Safety

Ultimate $SFu_FS := 1.0$

Joint Separation $SFsep_FS := 1.0$

Reference:E:\PROGETTI\AMS_ZENITH_RAD\ZENITH_RADIATOR\final analysis\SPOKES_2_PL_GFRP\Verifica bulloni\bolt_ stiffness_nut_FS_RevC.mc

Bolt Fail-safe Load data

Joint separation load $Psep_FS = 217 lbf$

Max. load on the bolt(ultimate) $Pb_FS = 1482.4 lbf$

Summary of fail-safe Margins for bolt:

Joint separation	$MS_FS_1 = 1.36$	Total Thread shear Ultimate	$MS_FS_5 = 1.34$
Direct Tension Ultimate	$MS_FS_2 = 10.6$	Shear Ultimate	$MS_FS_6 = 27.9$
Total Tension Ultimate	$MS_FS_3 = 0.95$	Bending Ultimate	$MS_FS_7 = 10$
Direct Thread shear Ultimate	$MS_FS_4 = 12.92$	Combined shear, tension and bending ultimate	$MS_FS_8 = 0.95$

Determination of the smallest fail-safe margin of safety for the bolt, and the failure mode:

$MSbolt_FS := \min(MS_FS)$

$MSbolt_FS = 0.95$ Failure_Mode_FS = "Combined Shear Tension Bending Ultimate"

Questo documento contiene informazioni di proprietà di CARLO GAVAZZI SPACE SpA. Tutti i diritti sono riservati.
All information contained in this document are property of CARLO GAVAZZI SPACE SpA. All right reserved.

ANNEX 2

TABLES FOR SAFETY REVIEW

MARGIN OF SAFETY OF CRYO TCS FOR NOMINAL CONFIGURATION

Item	Drawing no.	Material and temper	Material allowable stress [ksi]	Max. applied stress [ksi]	Ratio of applied limit stress to allowable stress	Margin of Safety (ult) SF=2	Fracture Classification	Rationale	Comments
STIFF BRACKET	40-AMS02TCS-210.01.03	Al 7075 T7351	68	31.1	0.46	0.09			
GPS ANTENNA SUPPORT	40-AMS02TCS-200.00.01	Al 7075 T7351	68	27.5	0.40	0.23			
ZENITH RADIATOR PANEL SKIN	40-AMS02TCS-220.01.01 40-AMS02TCS-220.01.03 40-AMS02TCS-220.01.06	Al 2024 T81	67	15.8	0.24	1.13			
ZENITH RADIATOR PANEL CORE	40-AMS02TCS-220.01.02	Rohacell	0.12	0.058	0.48	0.01			
LHP CONDENSER LINE	40-AMS02TCS-220.01.04 40-AMS02TCS-220.01.05	Al 3103	13.8	5.4	0.48	1.54			
SPOKES	40-AMS02TCS-240.00.00	GFRP	116	47.5	0.48	0.22			
BIMETALLIC SUPPORT BRACKETS	40-AMS02TCS-220.01.12	Peek	16	5.6	0.35	0.42			
LHP TRANSPORT LINE		AISI 316L	81	NA	NA	NA			
LHP TRD BRACKETS		Peek	16	7.1	0.44	0.12			
VSB SUPPORTS	40-AMS02TCS-281.00.02 40-AMS02TCS-281.00.03	Al 7075 T7351	68	15.5	0.23	1.18			
LHP VSB BRACKETS	40-AMS02TCS-281.00.12 40-AMS02TCS-281.00.13 40-AMS02TCS-281.00.14 40-AMS02TCS-283.00.04 40-AMS02TCS-283.00.05 40-AMS02TCS-283.00.06	Peek	16	2.3	0.14	>2			
LHP VSB STAND-OFF	40-AMS02TCS-281.00.18	Peek	16	4.8	0.3	0.65			
LHP VSB3 UPPER BRACKET		Peek	16	2.7	0.17	1.97			
Z-BRACKET	40-AMS02TCS-250.00.00 40-AMS02TCS-250.00.00	GFRP	55	NA	NA	0.47			MoS calculated from Failure Index
VSB COVER	40-AMS02TCS-281.00.07	CFRP	100	NA	NA	1.5			MoS calculated from Failure Index
VSB BODY	40-AMS02TCS-281.00.01	CFRP	100	NA	NA	0.56			MoS calculated from Failure Index

Questo documento contiene informazioni di proprietà di CARLO GAVAZZI SPACE SpA. Tutti i diritti sono riservati.
All information contained in this document are property of CARLO GAVAZZI SPACE SpA. All right reserved.

MARGIN OF SAFETY OF CRYO TCS FASTNER FOR NOMINAL CONFIGURATION

Item	Drawing no.	Material and type	Material allowable stress/force	MU	Applied load [lbf]	Utilisation Coefficient	Margin of Safety (ult) SF=2	Fracture Classification	Rationale	Comments
Z-BRACKET/ RADIATOR	Joint 1a	NAS1351N3 A286	160	ksi	Axial: 182.8 Shear: 288.1	72.6	0.63	Fail Safe		Maximum Combined Tension and Shear
Z-BRACKET/TRD	Joint 1b	NAS1351C4LE12 A286	160	ksi	Axial: 186.9 Shear: 136.3	73	0.842	Fail Safe		Maximum Combined Tension and Shear
STIFF BKT/RADIATOR	Joint 2a	NAS1351N4-16 A286	160	ksi	Axial: 0.5 Shear: 244.2	73.1	0.94	Fail Safe		Maximum Combined Tension and Shear
STIFF BKT/TRD	Joint 2b	NAS1351N4LE12 A286	160	ksi	Axial: 0 Shear: 651.9	74.7	0.475	Fail Safe		Maximum Combined Tension and Shear
SPOKES/RADIATOR	Joint 3a	Ti 6Al 4V	150	ksi	Axial: 136.7 Shear: 0.7	74.5	0.45	Fail Safe		Maximum Combined Tension and Shear
SPOKES/TRD	Joint 3b	Ti 6Al 4V	150	ksi	Axial: 136.7 Shear: 0.7	71.2	0.47	Fail Safe		Total Thread Shear Ultimate
GPS ANTENNA SUPPORT/TRD	Joint 4	NAS1351N4LE12 A286	160	ksi	Axial: 0 Shear: 651.9	74.7	0.475	Fail Safe		Maximum Combined Tension and Shear
GPS ANTENNA/GPS ANTENNA SUPPORT	Joint 5	DIN 965 M3x16 A2	101.5	ksi	Axial: 11.9 Shear: 28.6	67.7	1.17	Fail Safe		Maximum Combined Tension and Shear
VSB - VACUUM CASE	Joint 6	NAS1351 C6-20 A286	80	ksi	Axial: 38.5 Shear: 354.1	73.7	0.747	Fail Safe		Maximum Combined Tension and Shear
VSB BODY / LHP VSB BKT	Joint 7	NAS1351C08-6 A286	80	ksi	Axial: 53.2 Shear: 191.9	60.6	0.03	Fail Safe		Maximum Combined Tension and Shear
VSB SUPPORTS/ LHP VSB STAND-OFF	Joint 8	DIN 912 M5x12 A2	101.5	ksi	Axial: 18.7 Shear: 21.9	70.7	1.158	Fail Safe		Maximum Combined Tension and Shear
VSB BODY/VSB COVER	Joint 9	NAS1351C3-8 A286	80	ksi	Axial: 1.5 Shear: 154.7	64.9	0.59	Fail Safe		Maximum Combined Tension and Shear
BI-METALLIC SUPPORT BKT/RADIATOR	Joint 10	NAS1351N3LE12 A286	160	ksi	Axial: 14 Shear: 380.3	71.7	0.43	Fail Safe		Maximum Combined Tension and Shear
VSB SUPPORTS/VSB BODY	Joint 11	CR3522-5-05 A286	1545	lbs	Axial: 12.8 Shear: 284.2	NA	1.23	Fail Safe		Shear Ultimate

Questo documento contiene informazioni di proprietà di CARLO GAVAZZI SPACE SpA. Tutti i diritti sono riservati.
All information contained in this document are property of CARLO GAVAZZI SPACE SpA. All right reserved.

MARGIN OF SAFETY OF CRYO TCS FASTNER FOR FAIL SAFE CONFIGURATION

Item	Drawing no.	Material and type	Material allowable stress/force	MU	Applied load [lbf]	Utilisation Coefficient	Margin of Safety (ult) SF=1	Fracture Classification	Rationale	Comments
Z-BRACKET/ RADIATOR	Joint 1a	NAS1351N3 A286	160	ksi	Axial: 216.9 Shear: 47.5	72.6	0.95	Fail Safe		Maximum Combined Tension and Shear
Z-BRACKET/TRD	Joint 1b	NAS1351C4LE12 A286	160	ksi	Axial: 20 Shear: 228.8	73	0.87	Fail Safe		Total Tension Ultimate
STIFF BKT/RADIATOR	Joint 2a	NAS1351N4-16 A286	160	ksi	Axial: 20 Shear: 371.4	73.1	0.96	Fail Safe		Maximum Combined Tension and Shear
STIFF BKT/TRD	Joint 2b	NAS1351N4LE12 A286	160	ksi	Axial: 57.3 Shear: 985.4	74.7	0.66	Fail Safe		Maximum Combined Tension and Shear
SPOKES/RADIATOR	Joint 3a	Ti 6Al 4V	150	ksi	Axial: 133.7 Shear: 0.8	74.5	0.46	Fail Safe		Maximum Combined Tension and Shear
SPOKES/TRD	Joint 3b	Ti 6Al 4V	150	ksi	Axial: 133.7 Shear: 0.8	71.2	0.48	Fail Safe		Total Thread Shear Ultimate
GPS ANTENNA SUPPORT/TRD	Joint 4	NAS1351N4LE12 A286	160	ksi	Axial: 67.3 Shear: 348.8	74.7	0.92	Fail Safe		Maximum Combined Tension and Shear
GPS ANTENNA/GPS ANTENNA SUPPORT	Joint 5	DIN 965 M3x16 A2	101.5	ksi	Axial: 15.3 Shear: 19.8	67.7	1.27	Fail Safe		Maximum Combined Tension and Shear
VSB - VACUUM CASE	Joint 6	NAS1351 C6-20 A286	80	ksi	Axial: 334.3 Shear: 34.4	73.7	0.77	Fail Safe		Maximum Combined Tension and Shear
VSB BODY / LHP VSB BKT	Joint 7	NAS1351C08-6 A286	80	ksi	Axial: 40.7 Shear: 185.7	60.6	0.53	Fail Safe		Maximum Combined Tension and Shear
VSB SUPPORTS/ LHP VSB STAND-OFF	Joint 8	DIN 912 M5x12 A2	101.5	ksi	Axial: 28.6 Shear: 31.3	70.7	1.17	Fail Safe		Maximum Combined Tension and Shear
VSB BODY/VSB COVER	Joint 9	NAS1351C3-8 A286	80	ksi	Axial: 2.6 Shear: 149.9	64.9	0.93	Fail Safe		Maximum Combined Tension and Shear
BI-METALLIC SUPPORT BKT/RADIATOR	Joint 10	NAS1351N3LE12 A286	160	ksi	Axial: 17.4 Shear: 0	71.7	1.02	Fail Safe		Maximum Combined Tension and Shear
VSB SUPPORTS/VSB BODY	Joint 11	CR3522-5-05 A286	1545	lbs	Axial: 126 Shear: 249.1	NA	4.39	Fail Safe		Shear Ultimate

Questo documento contiene informazioni di proprietà di CARLO GAVAZZI SPACE SpA. Tutti i diritti sono riservati.
All information contained in this document are property of CARLO GAVAZZI SPACE SpA. All right reserved.