CARLO GAVAZZI SPACE SpA	AMSTCS

Tipo Doc.: *Doc.Type:*	PROCEDURE			N°DRD: *DRD N°:*	NA
N°Doc.: *Doc. N°:*	**AMSTCS-PR-CGS-015**	Ediz.: *Issue:* **1**	Data: *Date:* **MAY 2008**	Pagina *Page* **1**	Di *Of* **18**
Titolo : *Title :*	AMS ZENITH RADIATOR SPOKES GLUING PROCEDURE				

	Nome & Funzione *Name & Function*	Firma *Signature*	Data *Date*
Preparato da: *Prepared by:*	Bursi A. (DT/MT/)		
Approvato da: *Approved by:*	Duchini G. (DT/MT/) Vettore C. (DT/MT/) Cremonesi L. (PA/QA/) Cinquepalmi C. (PC/CC)	 L. Cre - omesi C. Cinquepalmi	16/5/09 16/05/09 18.05.09 18.05.09
Applicazione autorizzata da: *Application authorized by:*	Olivier M. (DP/PL/)		16/05/09
Customer / Higher Level Contractor			
Accettato da: *Accepted by:*			
Approvato da: *Approved by:*			

LISTA DI DISTRIBUZIONE *DISTRIBUTION LIST*	N	A	I
Interna / *Internal*			
Esterna / *External*			

N=Numero di copie A=Applicazione I=Informazione
N=Number of copy A=Application I=Information

Gestione documenti: *Data Management:*	Firma / *Signature*	Data / *Date* 16-05-09	File: AMSTCS-PR-CGS-015_I1.doc

Questo documento contiene informazioni di proprietà di CARLO GAVAZZI SPACE SpA. Tutti i diritti sono riservati.
All information contained in this document are property of CARLO GAVAZZI SPACE SpA. All right reserved.

REGISTRAZIONE DELLE MODIFICHE / *CHANGE RECORD*

EDIZIONE *ISSUE*	DATA *DATE*	AUTORIZZAZIONE *CHANGE AUTHORITY*	OGGETTO DELLA MODIFICA E SEZIONI AFFETTE *REASON FOR CHANGE AND AFFECTED SECTIONS*
1	May 2008		First Issue

Questo documento contiene informazioni di proprietà di CARLO GAVAZZI SPACE SpA. Tutti i diritti sono riservati.
All information contained in this document are property of CARLO GAVAZZI SPACE SpA. All right reserved.

LISTA DELLE PAGINE VALIDE / *LIST OF VALID PAGES*

PAGINA *PAGE*	EDIZIONE *ISSUE*	PAGINA *PAGE*	EDIZIONE *ISSUE*	PAGINA *PAGE*	EDIZIONE *ISSUE*	PAGINA *PAGE*	EDIZIONE *ISSUE*	PAGINA *PAGE*	EDIZIONE *ISSUE*
1 - 18	1								

Questo documento contiene informazioni di proprietà di CARLO GAVAZZI SPACE SpA. Tutti i diritti sono riservati.
All information contained in this document are property of CARLO GAVAZZI SPACE SpA. All right reserved.

TABLE OF CONTENT

1. SCOPE **5**

2. DOCUMENTS **6**

2.1 REFERENCE DOCUMENTS 6

3. ACRONYMS **7**

4. DESCRIPTION OF FLIGHT MODEL SPOKE **8**

5. DESCRIPTION OF SPOKE BREADBOARD **10**

6. REQUIREMENTS/CONDITIONS **12**

6.1 REQUIRED TOOLS AND SUPPORT EQUIPMENT 12
6.1.1 SPECIAL TOOLS 12
6.1.2 SPOKE BREADBOARD GLUING SUPPORT EQUIPMENT 13
6.1.3 FLIGHT MODEL SPOKE GLUING SUPPORT EQUIPMENT 14
6.2 PRODUCT ASSURANCE 15
6.3 ENVIRONMENTAL CONDITIONS 15
6.4 PERSONNEL 15

7. ORGANIZATION OF GLUING PROCESS **15**

7.1 RISKS 16
7.2 STAFF/RESPONSABILITIES 16

8. PROCEDURE VARIATION SHEET **16**

9. STEP-BY STEP ASSEMBLY SEQUENCE **18**

LIST OF TABLES

Table 4-1 Spoke flight model assembly parts 8
Table 4-1 Spoke BB assembly parts 10
Table 9-1 STEP_BY_STEP Assembly sequence 18

LIST OF FIGURES

Fig. 4-1 Spoke assembly 9
Fig. 5-1 Spoke assembly on support equipment 11

Questo documento contiene informazioni di proprietà di CARLO GAVAZZI SPACE SpA. Tutti i diritti sono riservati.
All information contained in this document are property of CARLO GAVAZZI SPACE SpA. All right reserved.

1. SCOPE

This document describes the Zenith Radiator spokes GFRP rod-titanium ends gluing procedure definition.
A description of the needed support equipments, tools and materials is provided (chp. 6) and finally a step by step sequence is shown (chp.9).
This procedure is applicable both to the spoke breadboard (BB) and flight model since they are analogous in terms of dimensions, material, roughness and surface treatment.

Questo documento contiene informazioni di proprietà di CARLO GAVAZZI SPACE SpA. Tutti i diritti sono riservati.
All information contained in this document are property of CARLO GAVAZZI SPACE SpA. All right reserved.

2. DOCUMENTS

2.1 REFERENCE DOCUMENTS

RD # (ID)	Doc Number	Issue	Date	Rev	Title
RD. 1			Aug, 2005		Technical Datasheet: 3M Scotch Weld Epoxy Adhesive 2216 B/A

Questo documento contiene informazioni di proprietà di CARLO GAVAZZI SPACE SpA. Tutti i diritti sono riservati.
All information contained in this document are property of CARLO GAVAZZI SPACE SpA. All right reserved.

3. ACRONYMS

AMS	Alfa Magnetic Spectrometer
BB	BreadBoard
C.I.	Configuration Item. Also called Part Number (P/N)
CGS	Carlo Gavazzi Space
NA	Not Applicable
NCR	Non Conformance Report
P/N	Part Number. Also called Configuration Item C.I.
PA	Product Assurance
PVS	Procedure Variation Sheet
QA	Quality Assurance
RD	Reference Document
S/N	Serial Number
UUT	Unit Under Test

Questo documento contiene informazioni di proprietà di CARLO GAVAZZI SPACE SpA. Tutti i diritti sono riservati.
All information contained in this document are property of CARLO GAVAZZI SPACE SpA. All right reserved.

4. DESCRIPTION OF FLIGHT MODEL SPOKE

The spokes will be installed on the AMS CRYO TCS between Zenith radiator panels and the TRD, as shown in the following figure.

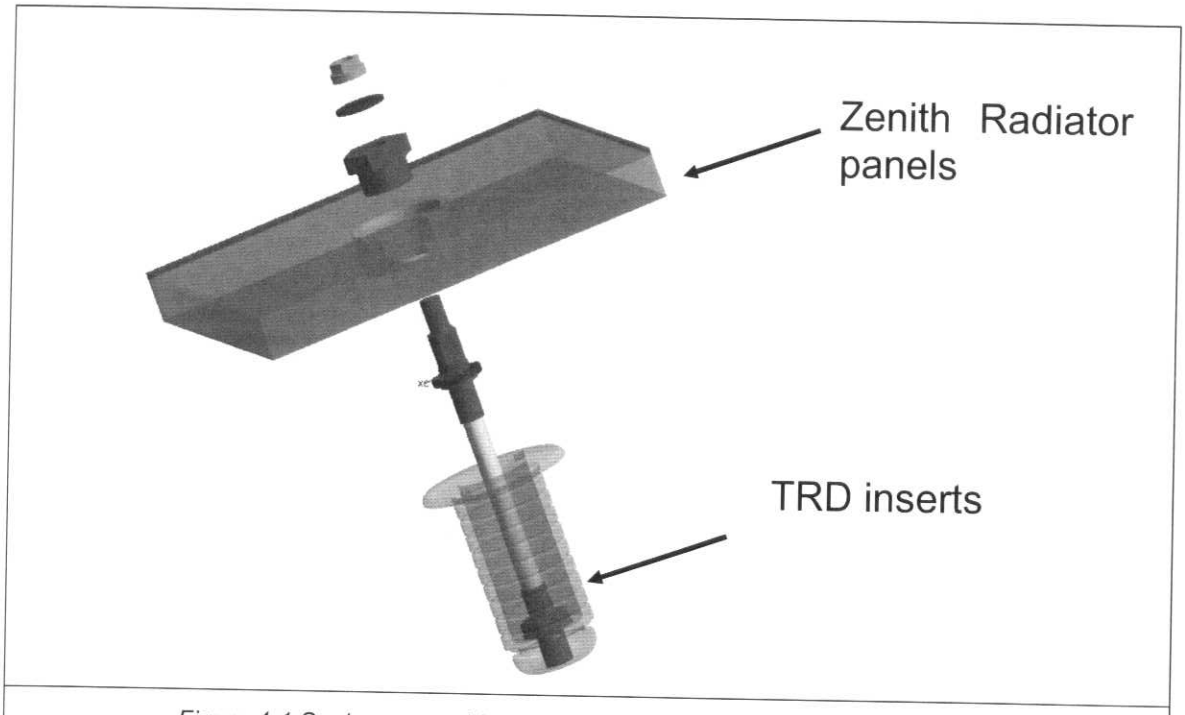

Figure 4-1 Spokes assembly between the Zenith Radiator panel and TRD

The spokes are composed by the following components:

ITEM	Qty	Drawing Number/Part Number	NOTES
Rod	1	40-AMS02TCS-290.00.01	
Lower rod end	1	40-AMS02TCS-290.00.02	
Upper rod end	1	40-AMS02TCS-290.00.03	

Table 4-1 Spoke flight model assembly parts

The spokes materials are:

- GFRP pultruded rod: E-glass fiber and Polyester resin Synolite 0612-N-1;
- Ti-6Al-4V rod ends;
- EC 2216 glue.

The spokes main dimensions are:

- Rod: OD: 3 mm – Length: 55 mm;
- Rod end: OD: 16 mm – ID: 3.2 mm

Questo documento contiene informazioni di proprietà di CARLO GAVAZZI SPACE SpA. Tutti i diritti sono riservati.
All information contained in this document are property of CARLO GAVAZZI SPACE SpA. All right reserved.

Following figure shows the flight model spoke assembly.

SPOKE ASSY P/N:
40-AMS02TCS-290.00.00

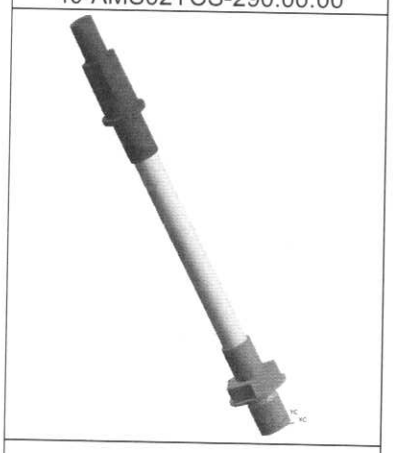

Fig. 4-1 Spoke assembly

Before assembling the spoke flight model a breadboard spoke has been developed to validate the gluing process and to determine the bonded junction ultimate strength.

Questo documento contiene informazioni di proprietà di CARLO GAVAZZI SPACE SpA. Tutti i diritti sono riservati.
All information contained in this document are property of CARLO GAVAZZI SPACE SpA. All right reserved.

5. DESCRIPTION OF SPOKE BREADBOARD

The main difference between the breadboard and flight model is the rod end design that for the breadboard is a simple threaded cylinder, as shown in the following figure.

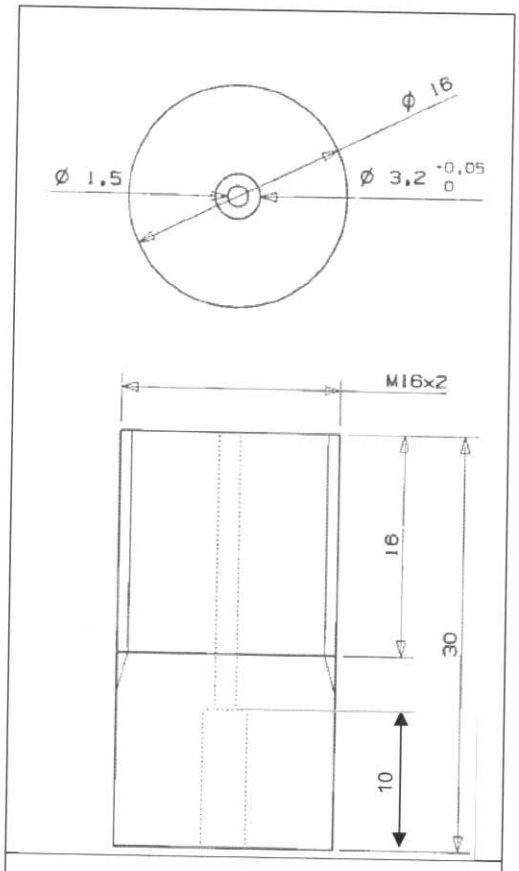

Figure 5-1 Spoke breadboard rod end

However the spoke BB is fully representative of flight model since material and interface between rod ends and GFRP rods are identical (hole machining dimensions and tolerances).
The spoke breadboard parts are:

ITEM	Qty	Drawing Number/Part Number	NOTES
Rod	1	01-POLIAMS02TCS-100.00.01	The test rod is provided by Politecnico di Milano. Test rod identical to the flight rod (40-AMS02TCS-290.00.01)
Rod ends	2	40-AMS02TCS-240.00.04	

Table 5-1 Spoke BB assembly parts

Questo documento contiene informazioni di proprietà di CARLO GAVAZZI SPACE SpA. Tutti i diritti sono riservati.
All information contained in this document are property of CARLO GAVAZZI SPACE SpA. All right reserved.

The spoke breadboard is shown in the next figure.

SPOKE BB ASSY P/N:
01-POLIAMS02TCS-100.00.00
(the spoke BB assembly is provided by Politecnico di Milano)

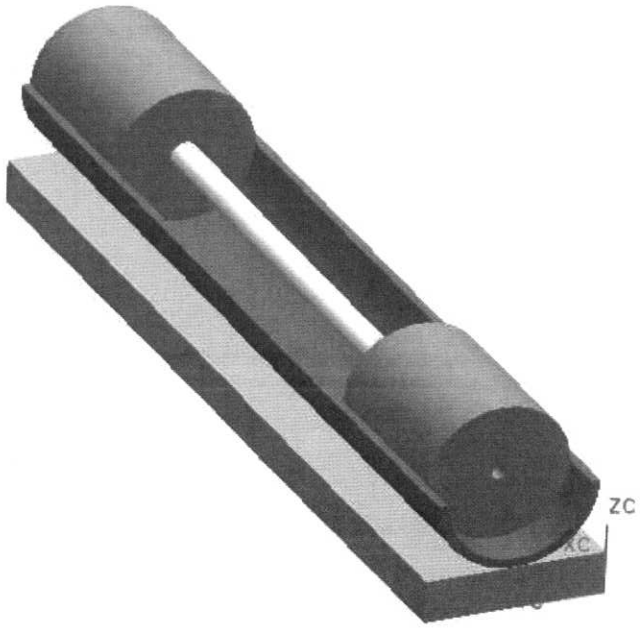

Fig. 5-1 Spoke assembly on support equipment

Questo documento contiene informazioni di proprietà di CARLO GAVAZZI SPACE SpA. Tutti i diritti sono riservati.
All information contained in this document are property of CARLO GAVAZZI SPACE SpA. All right reserved.

6. REQUIREMENTS/CONDITIONS

6.1 REQUIRED TOOLS AND SUPPORT EQUIPMENT

An adequate support equipment shall be used to perform the bonded junction between GFRP rod and titanium rod ends. This equipment is a mechanical support able to sustain stably the rod ends and the GFRP during the gluing process.
In particular two different support equipments shall be used for the breadboard and flight model spokes since the support design shall be based on the rod ends shape.

Since the EC2216 B/A has a polymerization time of 7 days @ 25℃ [RD1] a plug shall be used during the gluing process in order to fill the drain hole of the rod ends. This special tool will be used both for spoke BB and flight model.

6.1.1 SPECIAL TOOLS

The following figure shows a bottom plug schematic view.

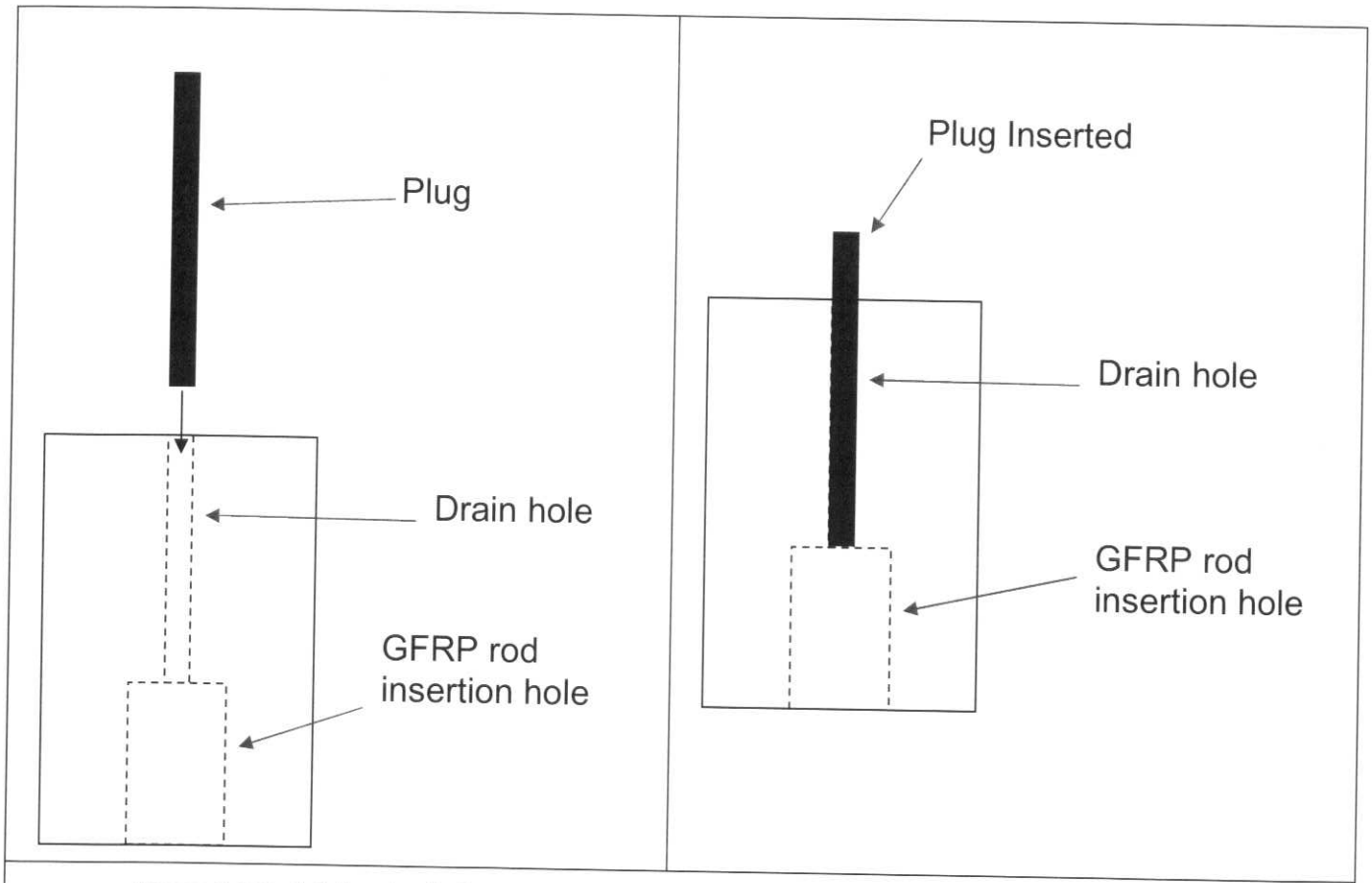

Figure 6-1 On left the plug before the insertion in the rod end; on right the rod end ready to be glued

The necessary quantity of plugs shall be prepared before the gluing process wrt the number of simultaneously gluing process.

Questo documento contiene informazioni di proprietà di CARLO GAVAZZI SPACE SpA. Tutti i diritti sono riservati.
All information contained in this document are property of CARLO GAVAZZI SPACE SpA. All right reserved.

6.1.2 SPOKE BREADBOARD GLUING SUPPORT EQUIPMENT

The spoke breadboard rod ends are threaded titanium cylinder with a diameter of 16mm.
The following figures show an example of an adequate spoke breadboard support equipment.

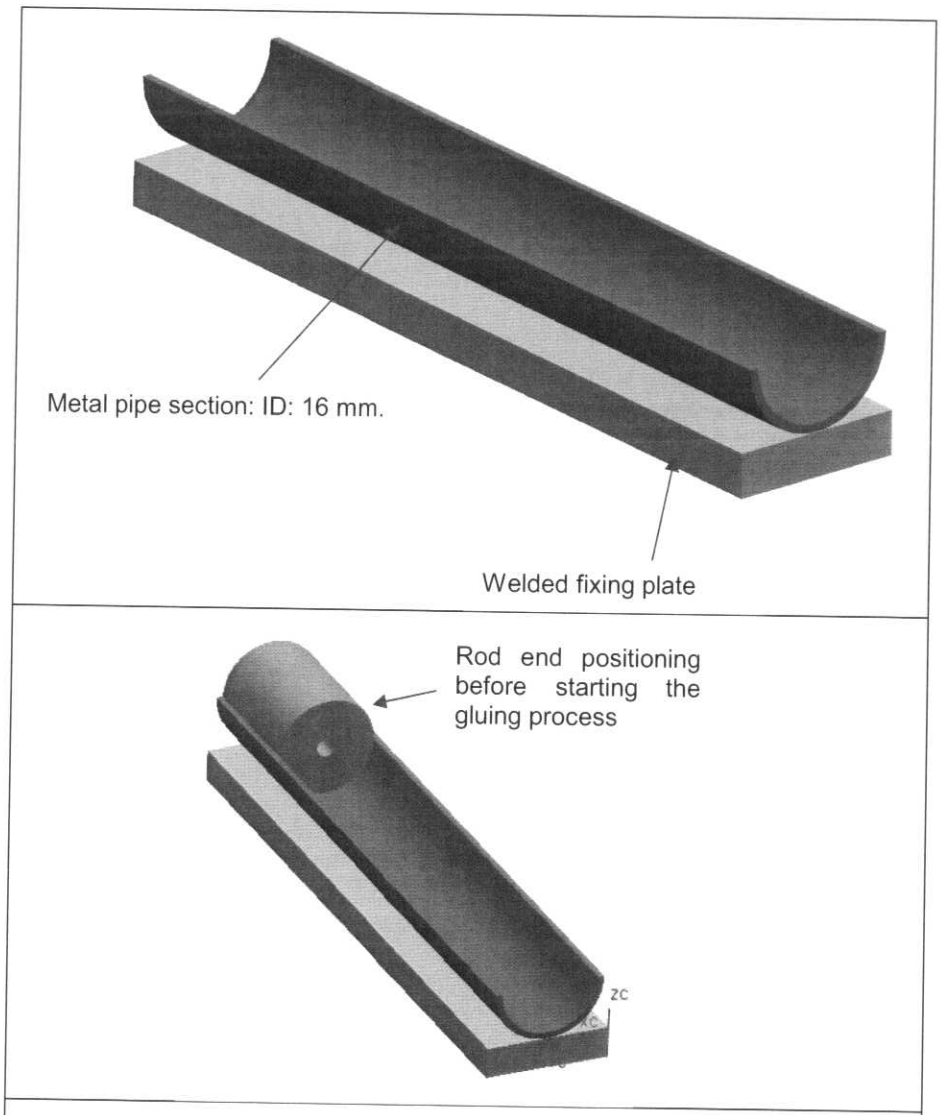

Figure 6-2 Spoke breadboard support equipment

The support equipment detailed design shall be provided in the spokes gluing report.

Questo documento contiene informazioni di proprietà di CARLO GAVAZZI SPACE SpA. Tutti i diritti sono riservati.
All information contained in this document are property of CARLO GAVAZZI SPACE SpA. All right reserved.

6.1.3 FLIGHT MODEL SPOKE GLUING SUPPORT EQUIPMENT

The following figures show an example of an adequate flight model spoke support equipment.

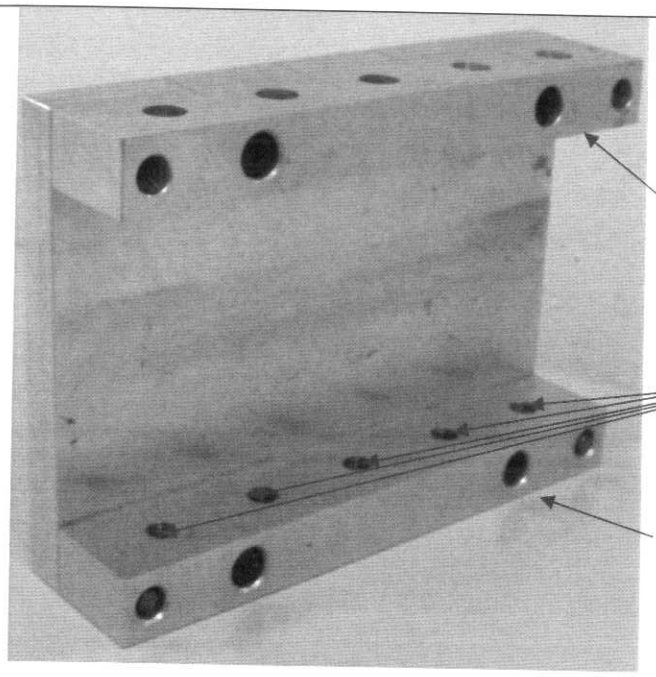

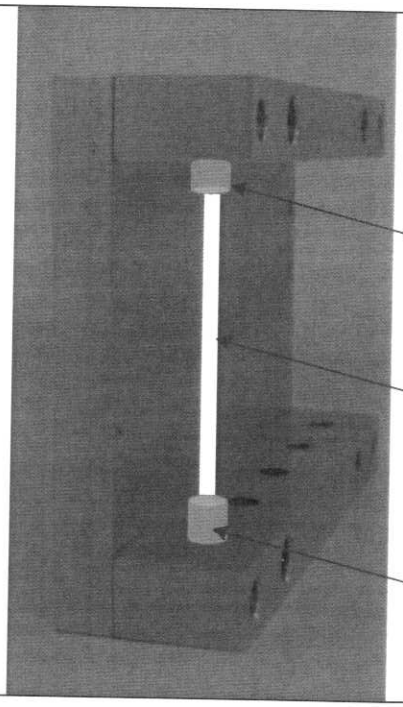

Figure 6-3 Flight model spoke support equipment

Not more than five spokes can be assembled using this equipment.

Questo documento contiene informazioni di proprietà di CARLO GAVAZZI SPACE SpA. Tutti i diritti sono riservati.
All information contained in this document are property of CARLO GAVAZZI SPACE SpA. All right reserved.

6.2 PRODUCT ASSURANCE

As a result of the design and development phase some safety aspects concerning qualification tests will be verified during integration and test to close the associated hazards of system safety analysis. Identified critical processes, functions and safety significant operations will be controlled by PA personnel during the activities.

6.3 ENVIRONMENTAL CONDITIONS

All assembly activities will be performed in dedicated facilities at an ambient temperature of 20°± 5° C. This is also the reference temperature for the manufacturing process.
It is important to perform the assembly activities at this specified temperature to prevent the generation of constraints and there-by built-in stresses. Recording of the ambient temperature during the dimensional verification is mandatory.

6.4 PERSONNEL

For all processes and activities where it is required (e.g. crimping, soldering etc.), only properly trained personnel will perform the work.

7. ORGANIZATION OF GLUING PROCESS

The assembly steps are put into chronological order, according to strategies, risks, and other marginal conditions :

Production control is performed after a manufacturing release; each single self-standing item is inspected and documented on an inspection record. All materials will be controlled beginning with the raw material manufacturing, during storage and until final manufacturing.
The main phases of the integration process are:

0. Preliminary phase;
1. Set-up phase;
2. First rod end gluing;
3. Second rod end gluing.

Chapter 9 of this document provide the step-by step Assembly plan in form of Task sheets which describe each assembly sequence in detail and require all intermediate assembly inspections, measurements, also.

Questo documento contiene informazioni di proprietà di CARLO GAVAZZI SPACE SpA. Tutti i diritti sono riservati.
All information contained in this document are property of CARLO GAVAZZI SPACE SpA. All right reserved.

7.1 RISKS

If a special integration step happens to be risky the possibly existing problems and counter-measures have to be documented (e. g. danger for hardware during interaction with faulty software while no protection measures have been taken).
Non Conformance Reports (NCRs) are raised for all measurements values out of specified ranges and classified for minor/Major severity. A Review Board is to decide on the suggested recovery actions for the non conformances.

7.2 STAFF/RESPONSABILITIES

The organizational units/instances are allocated responsibilities within the scope of the integration (supervision of

8. PROCEDURE VARIATION SHEET

In case that for any reason the gluing procedure has to be changed, the change shall be described in a Procedure Variation Sheet (PVS) as shown in the next page.

The PVS shall contain:

- Reference to the procedure to be changed
- Reference to procedure page and paragraph
- Description of the change, possibly in the form was….is…..
- Reason for change
- Integration engineer, QA, Assembly conductor signatures and dates
- Customer signature and date (when required).

Each PVS shall be identified by a reference number provided in sequential order.

All the generated PVS shall be collected in a dedicated section of the Assembly Report.

Questo documento contiene informazioni di proprietà di CARLO GAVAZZI SPACE SpA. Tutti i diritti sono riservati.
All information contained in this document are property of CARLO GAVAZZI SPACE SpA. All right reserved.

PROCEDURE VARIATION SHEET ref. N°:

Procedure Ref.:	Page Revised:	Paragraph Revised:

Description of Change:

Reason for Change:

CONCURRENCE

Cond.	QA	System Eng.		Customer
Date	Date	Date		Date

Questo documento contiene informazioni di proprietà di CARLO GAVAZZI SPACE SpA. Tutti i diritti sono riservati.
All information contained in this document are property of CARLO GAVAZZI SPACE SpA. All right reserved.

9. STEP-BY STEP ASSEMBLY SEQUENCE

0 Preliminary phase					
step	**Activity description**	**P/F**	**Date**	**Sign.**	**Stamp**
0.1	Prior to start of any assembly activity make sure that: All the spoke assembly parts (rod ends, GFRP rod and EC2216 B/A glue) are available according to the spoke assembly part list The required tools and equipments are available.				
0.2	Record type and calibration data of tools and devices				
1 Set-up phase					
step	**Activity description**	**P/F**	**Date**	**Sign.**	**Stamp**
1.1	Rub the GFRP rods with scotch brite only in the area to be glued				
1.2	Clean all the spoke parts with Isopropylic alcohol				
1.3	Mix the glue. Degas the mixture if needed.				
2 First rod end gluing					
step	**Activity description**	**P/F**	**Date**	**Sign.**	**Stamp**
2.1	Insert the plug in the first rod end for a length of 20 mm				
2.2	Fill the hole of the first spoke rod end where the GFRP rod end will be inserted with the EC2216 B/A up to a depth of 5 mm				
2.3	Insert the GFRP rod into the first rod end for all the hole depth.				
2.4	Rotate the GFRP rod to assure the contact between rod and glue.				
3 Second rod end gluing					
step	**Activity description**	**P/F**	**Date**	**Sign.**	**Stamp**
3.1	Insert the plug in the second rod end for a length of 20 mm				
3.2	Fill the hole of the second spoke rod end where the GFRP rod end will be inserted with the EC2216 B/A up to a depth of 5 mm				
3.3	Engage the GFRP rod in the second rod end for all the hole depth.				
3.4	Rotate the second spoke rod end to assure the contact between rod and glue.				
3.5	Check the assembly dimensions. Rod free length and assembly total length.				
3.6	Place the spoke assembly on the support equipment.				
3.8	Let polymerize the glue for 7 days [RD1]				
3.5	Assign a serial number to the assembly				
3.6	Go to the next assembly				

Table 9-1 STEP_BY_STEP Assembly sequence

Questo documento contiene informazioni di proprietà di CARLO GAVAZZI SPACE SpA. Tutti i diritti sono riservati.
All information contained in this document are property of CARLO GAVAZZI SPACE SpA. All right reserved.