ORIGINALE ARCHIVIO

CARLO GAVAZZI

CARLO GAVAZZI SPACE SpA

AMS02-TCS

Tipo Doc : *Doc.Type.*	TECHNICAL NOTE			N° DRD: *DRD N°:*	DEL061
N° Doc.: *Doc. N°:*	**AMSTCS-TN-CGS-006**	Ediz : *Issue:* **1**	Data: *Date:* **28-03-2008**	Pagina *Page* **1**	Di *Of* **23**
Titolo : *Title*	MAIN and TRACKER RADIATORS DESIGN REPORT				

	Nome & Funzione *Name & Function*	Firma *Signature*	Data *Date*
Preparato da: *Prepared by:*	G. Duchini (DT/MT)		28-3-08
Approvato da: *Approved by:*	M Molina (DT/MT) C Vettore (DP-OI) L Cremonesi (PA/QA) C. Cinquepalmi (PA/CC)		28/3/08 28/03/2008 28.03.08 28/03/08
Applicazione autorizzata da: *Application authorized by:*	M Olivier (PM)		28-03-08
Customer / Higher Level Contractor			
Accettato da: *Accepted by:*			
Approvato da: *Approved by:*			

LISTA DI DISTRIBUZIONE *DISTRIBUTION LIST*	N	A	I
Interna / *Internal*			
Esterna / *External* E. Russo (ASI)			

N=Numero di copie A=Applicazione I=Informazione
N=Number of copy A=Application I=Information

Gestione documenti: *Data Management* ..... Firma / *Signature* Data / *Date* 28/03/08

File: AMSTCS-TN-CGS-006_ issue 1

REGISTRAZIONE DELLE MODIFICHE / *CHANGE RECORD*

EDIZIONE *ISSUE*	DATA *DATE*	AUTORIZZAZIONE *CHANGE AUTHORITY*	OGGETTO DELLA MODIFICA E SEZIONI AFFETTE *REASON FOR CHANGE AND AFFECTED SECTIONS*
1	28-3-2008		FIRST ISSUE

LISTA DELLE PAGINE VALIDE / *LIST OF VALID PAGES*

PAGINA *PAGE*	EDIZIONE *ISSUE*	PAGINA *PAGE*	EDIZIONE *ISSUE*	PAGINA *PAGE*	EDIZIONE *ISSUE*	PAGINA *PAGE*	EDIZIONE *ISSUE*	PAGINA *PAGE*	EDIZIONE *ISSUE*
1-22	1	1-25							

TABLE OF CONTENT

1. SCOPE 5

2. RELEVANT DOCUMENTS 6

2.1 APPLICABLE DOCUMENTS 6
2.2 REFERENCE DOCUMENT 6

3. ACRONYMS 7

4. GENERAL RADIATORS DESIGN PHILOSOPY 9

4.1 RAM RADIATOR DESIGN DESCRIPTION 15
4.2 WAKE RADIATOR DESIGN DESCRIPTION 18
4.3 TRACKER RADIATOR DESIGN DESCRIPTION 21

1. SCOPE

The document corresponds to contract deliverable DEL 065

The purpose of the present document is to provide all the technical information for the design of the following radiators:

- RAM RADIATOR ASSY (1 part)
- WAKE RADIATOR ASSY (1 part)
- TRACKER RADIATOR (2 parts)

These radiators are parts of the AMS-02 Thermal Control System, and shall be installed onto the payload in the position detailed in Figure 1.1
RAM and WAKE Radiators are designed to both dissipate heat from the electronics crates and provide their structural support.
TRACKER Radiators are designed to reject the heat transported by the Tracker Thermal Control System (TTCS).

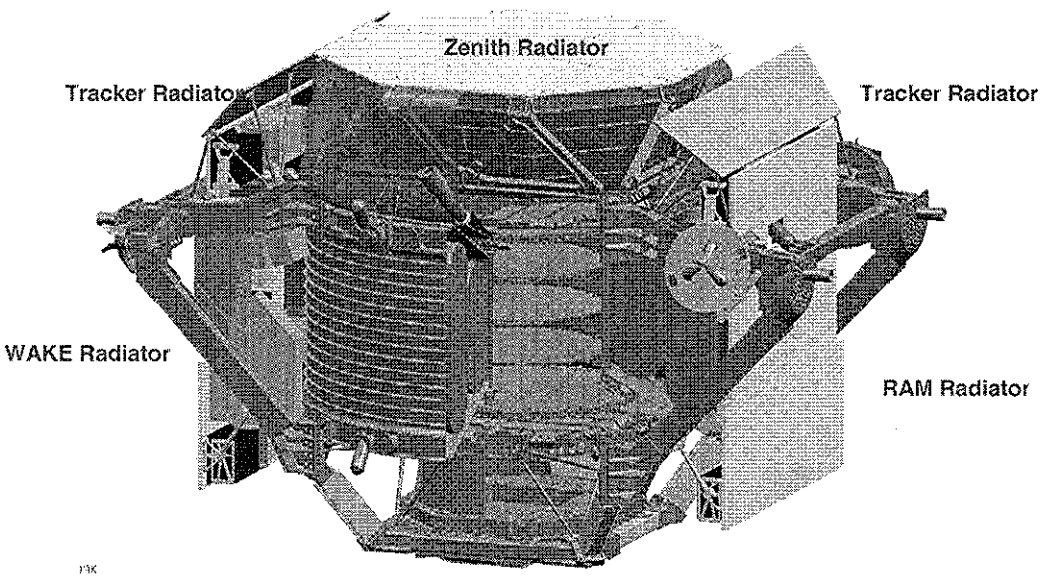

Figure 1.1 - AMS-02 Thermal Control System

2. RELEVANT DOCUMENTS

2.1 APPLICABLE DOCUMENTS

The documents listed here below are applicable to the present document for the extent recalled on it
The following documents in the latest applicable issue form a part of this plan to the extent specified herein:

AD	Document ID	Iss/Rev.	Date	Title
1	21-AMS-000.00.00	B	02/2008	RAM RADIATOR ASSEMBLY
2	21-AMS-000.01.00	B	02/2008	RAM RADIATOR ASSY PART LIST
3	22-AMS-000.00.00	B	02/2008	WAKE RADIATOR ASSEMBLY
4	22-AMS-000.01.00	A	02/2008	WAKE RADIATOR ASSY PART LIST
5	25-AMS-000.00.00	A	02/2008	TRACKER RADIATOR ASSEMBLY
6	25-AMS-000.01.00	A	02/2008	TRACKER RADIATOR ASSY PART LIST
6	MIL-HDBK-5H	-	01-12-1998	Metallic Materials and Elements for Aerospace Vehicle Structures
8	MIL-C-5541	E	30-11-1990	Chemical Conversion Coating on Aluminium and Aluminium Alloy
9	MIL-A-8625	F	10-09-1993	Anodic Coating For Aluminium and Aluminium and Alloy
10	PRC-6501	Rev. C	May 2003	Process Specification for Ultrasonic Inspection of Composite
11	Capitolato generale ASI, available on http://www.asi.it/html/norme/cap_gen.pdf			
12	Richiesta d'offerta per Programma AMS, attività di Fase C/D – Prot. ASI 006194 – 25/07/2007			
13	CapitolatoTecnico "Progetto: AMS Attività di fase C/D" Doc. N. DC-IPC-2007-062			
14	Tailoring di primo livello delle norme ECSS, serie M-E-Q Progetto AMS attività di fase C/D- Doc. n° DC-IPC-2007-063 Rev. A			
15	"Product Assurance Requirements - Progetto AMS attività di fase C/D " *-Doc. n° DC-IPC-2007-064 Rev. A*			
16	"AMS-02 Structural Verification Plan for the Space Transportation System *and the International Space Station", Doc. JSC28792, Iss.D, March 2005*			
17	"**AMS-***02 Thermal Control Requirements", Doc. AMS-RQ-CGS-001, Iss.1, April 2007*			

2.2 REFERENCE DOCUMENT

The documents listed here below are applicable to the present document for the extent recalled on it
The following documents in the latest applicable issue form a part of this plan to the extent specified herein:

RD	Document ID	Iss/Rev.	Date	Title
1	AMSTCS-TN-CGS-007	1	25/03/2008	MAIN and TRACKER RADIATOR ANALYSIS REPORT
2	Alpha Magnetic Spectrometer – 02 Assembly and Testing Integration Plan, Version A, JSC63123, 28-11-2005			

3. ACRONYMS

AIT	Assembly, Integration and Test
AIV	Assembly, Integration and Verification
AI&T	Assembly, Integration and Test
AD	Applicable Document
AIDC	Aerospace Industrial Development Corporation
CDR	Critical Design Review
CGS	Carlo Gavazzi Space
CCB	Configuration Control Board
CCN	Contract Change Notice
CDR	Critical Design Review
CIDL	Configuration Item Data List
CIJ	Crates Integration Jig
CN	Change notice
COA	Certificate of Acceptance
COQ	Certificate of qualification
CoC	Certificate of Conformity
D&D	Design and Development
DRD	Document Requirement Description
DRB	Delivery Review Board
DR	Dimensional Report
DI	Destructive Inspection
FM	Flight Model
F/H	Flight Hardware
GSE	Ground Support Equipment
GS	Ground Segment
ICD	Interface Control Document
IR	Inspection Report
MAIT	Manufacturing, Assembly, Integration and Test
MGSE	Mechanical Ground Support Equipment
NCR	Non Conformance Report
NC	Numeric Control
N/A	Not Applicable
NDI	Not Destructive Inspection
OTS	Off the shelf
P/L	Payload
P/N	Part Number
PA	Product Assurance
PDR	Preliminary Design Review
PT	Product Tree
QA	Quality Assurance
QAR	Qualification Acceptance Review
QC	Quality Control

QSR	Qualification Status Review
RCIJ	Ram Crates Integration Jig
RFD	Request for Deviation
RFW	Request for Waiver
RID	Review Item Discrepancy
SF	Safety Factor
SOW	Statement of Work
SRD	System Requirements Document
SRR	System Requirements Review
TBD	To Be Determined
TBC	To Be Confirmed
TBW	To Be Written
TC	Thermal Control
TRB	Test Review Board
TRRB	Test Readiness Review Board
TTCS	Tracker Thermal Control System
USS	Unique Support Structure
VCB	Verification Control Board
WCIJ	Wake Crate Integration Jig
WBS	Work Breakdown Structure
W/O	Without
WRT	With Respect To
W/P	Work Package

4. GENERAL RADIATORS DESIGN PHILOSOPY

The radiators consist of sandwich structure with Rohacell core, two aluminium face skins, embedded heat pipe and inserts.
All the parts shall be hot glued together using film or paste adhesive, under vacuum bag, following the autoclave process.
In the following Figure 4.1 an exploded typical radiator overview

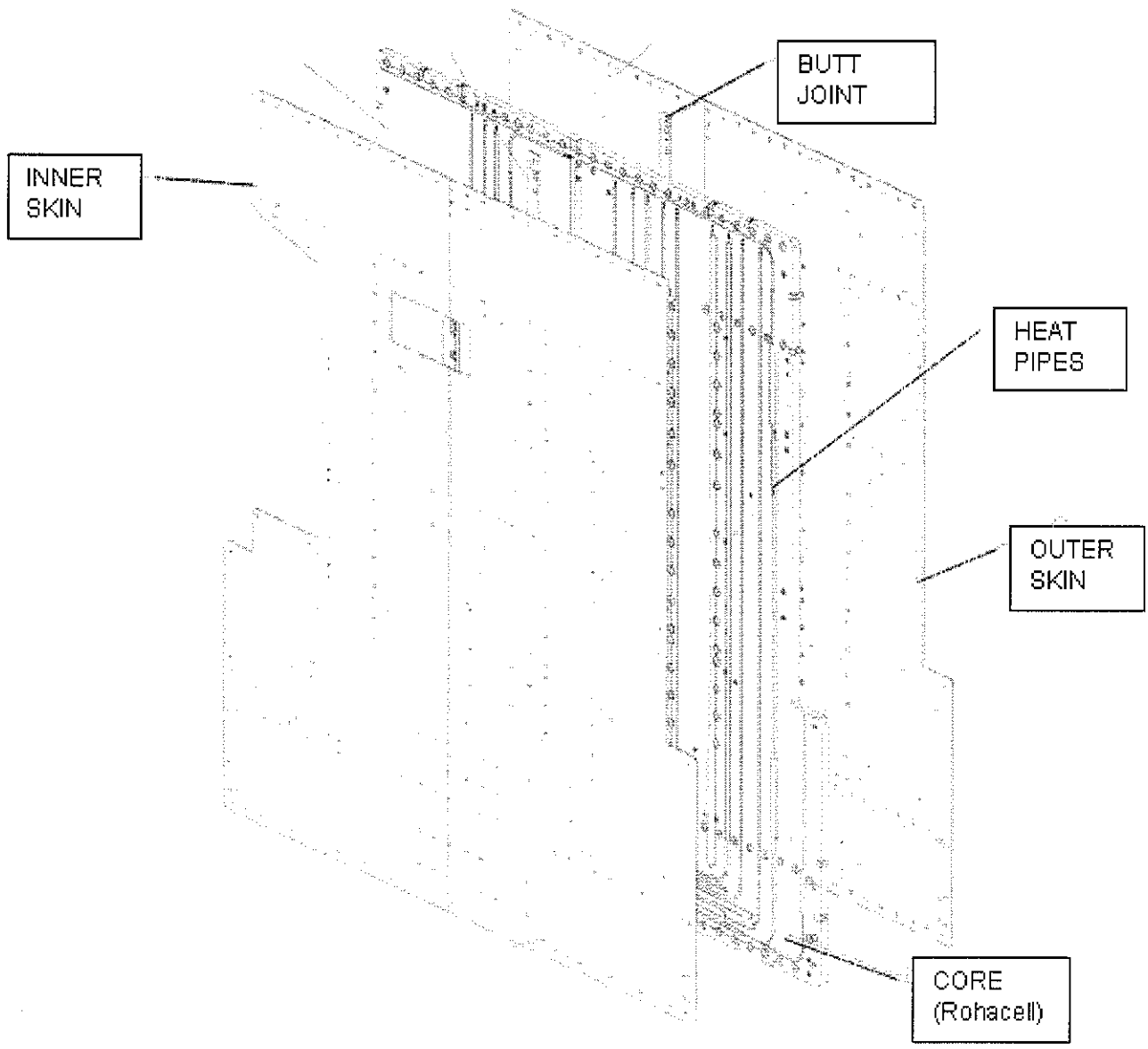

Figure 4.1 – Radiator Exploded view

The passive thermal control system is realized by means of a set of Heat Pipes, positioned (and glued) between outer and inner radiator skins.
Heat Pipes are standard axial groove made in Aluminium alloy and filled with high purity ammonia.
The Pipe ends are provided by two cups, the first one to close the Pipe (End Cup) and the second one to fill the Pipe (Filling Cup). After the Pipe filling, the Filling Cup shall be closed
In Figure 4.2 a typical Heat Pipe, flanged and bended

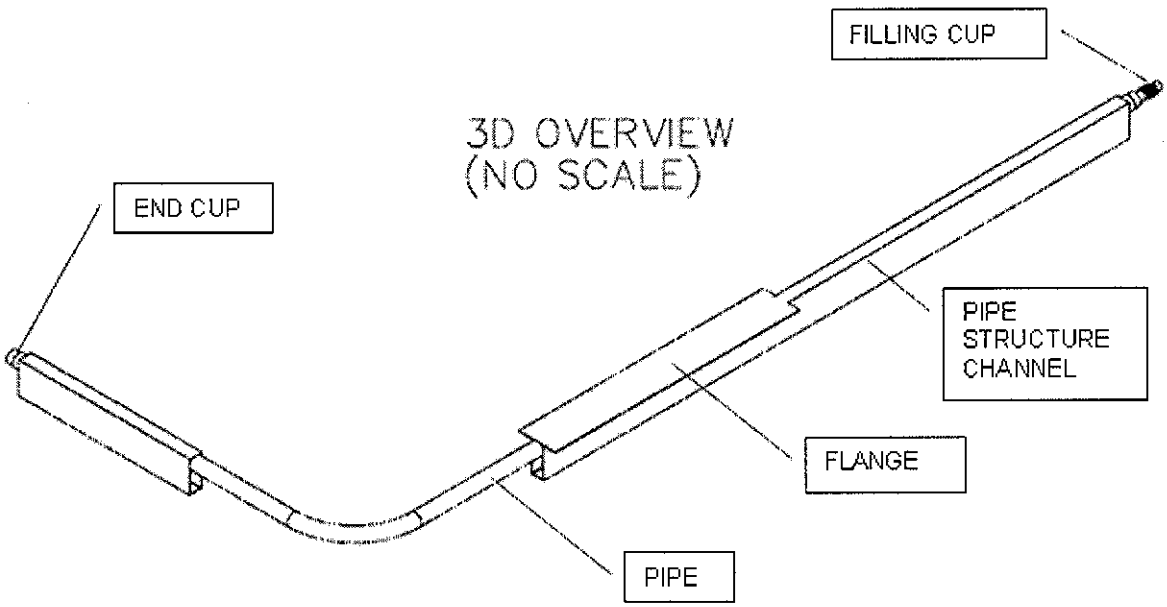

Figure 4.2 – Heat Pipe

The Pipe's structure channel (see figure 4.2) shall be vented by means of 2 mm diameter holes (at least two for each pipe). The same holes have to be replied on the skin as detailed in figure 4.3

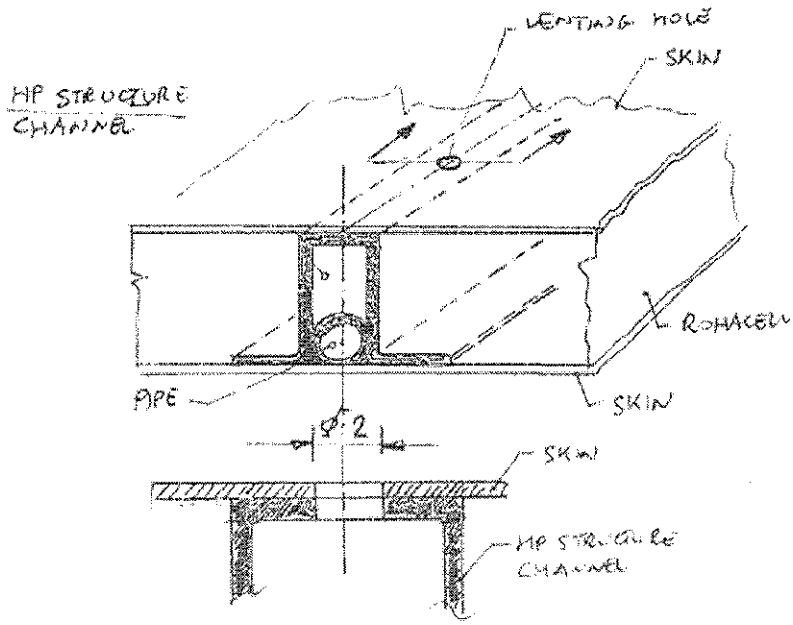

Figure 4.3 – Venting Holes (Pipe and skin)

A set of inserts, positioned between outer and inner skins, supply a structural fitting interface point with crates and radiators support brackets.
Typical panel cross sections, with installed inserts, are shown in Figure 4 4

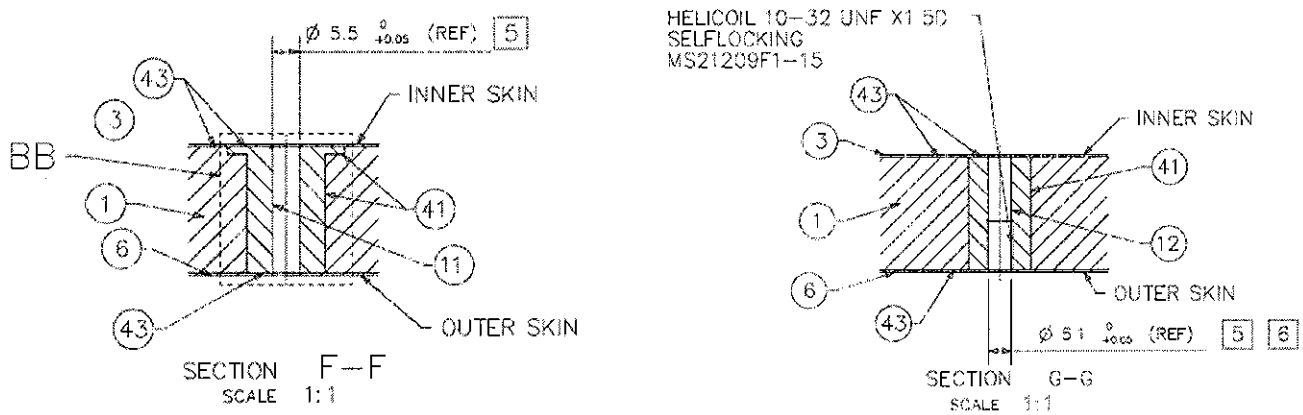

Figure 4.4 - inserts

All around the panel perimeter, a close out (mixture made of 60% Adhesive EC2216 B/A and 40% Ecchosphere IG101) 0.5mm thick, works as a Rohacell core protection.
In the following Figure 4.5 the typical close out application:

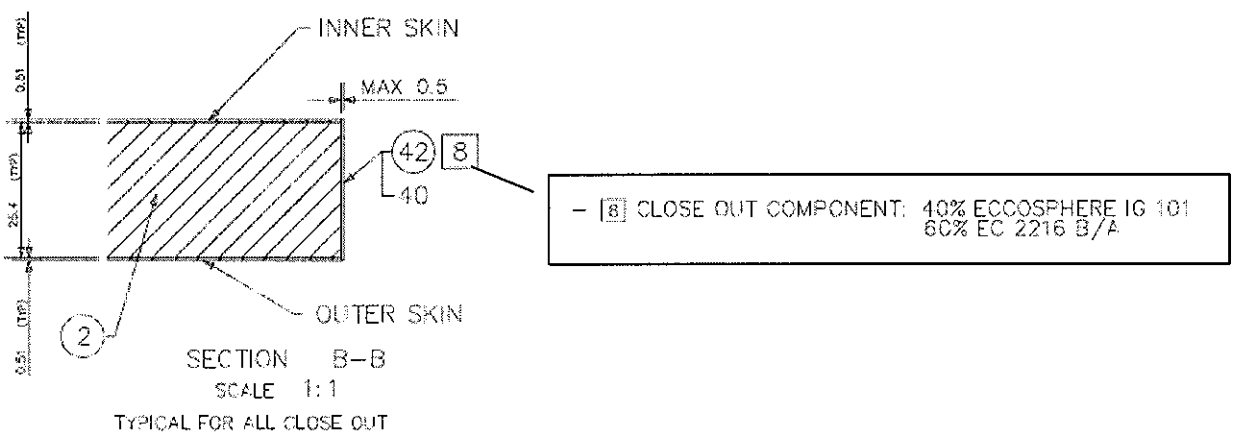

Figure 4.5 – Close out

All the aluminium alloy parts surface protection (Alodine and Anodic Coating) shall be done according to [AD8] and [AD9]
White paint SG121FD shall be applied according to the Supplier Technical Data Sheet

The outer and inner surface of the radiator shall be protected by means of Lexan (transparent Polycarbonate) removable sheets to protect white paint on the radiator front side and heater/thermostats circuits on the back-side The radiator external surface shall be protected according to the following Table 4.6

RADIATOR	INNER SURFACE (AMS02 Side)	OUTER SURFACE (Radiative Side)
RAM RADIATOR	YES	YES
WAKE RADIATOR	YES	YES
TRACKER RADIATOR (Both)	NO	YES

Table 4.6 – Radiator Protection Shield

The protection shall be installed according to the sketch in Figure 4.7.

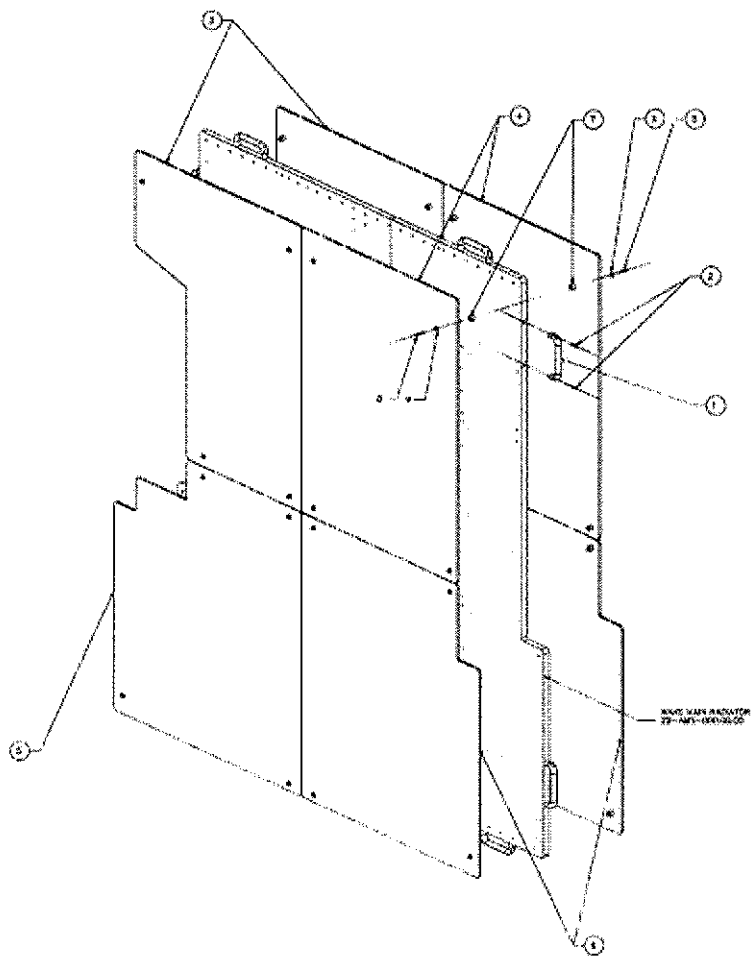

Figure 4.6 – Lexan protection installation

The radiator handling shall be done using a set of removable handles positioned onto the Radiator perimeter as shown in figure 4.8

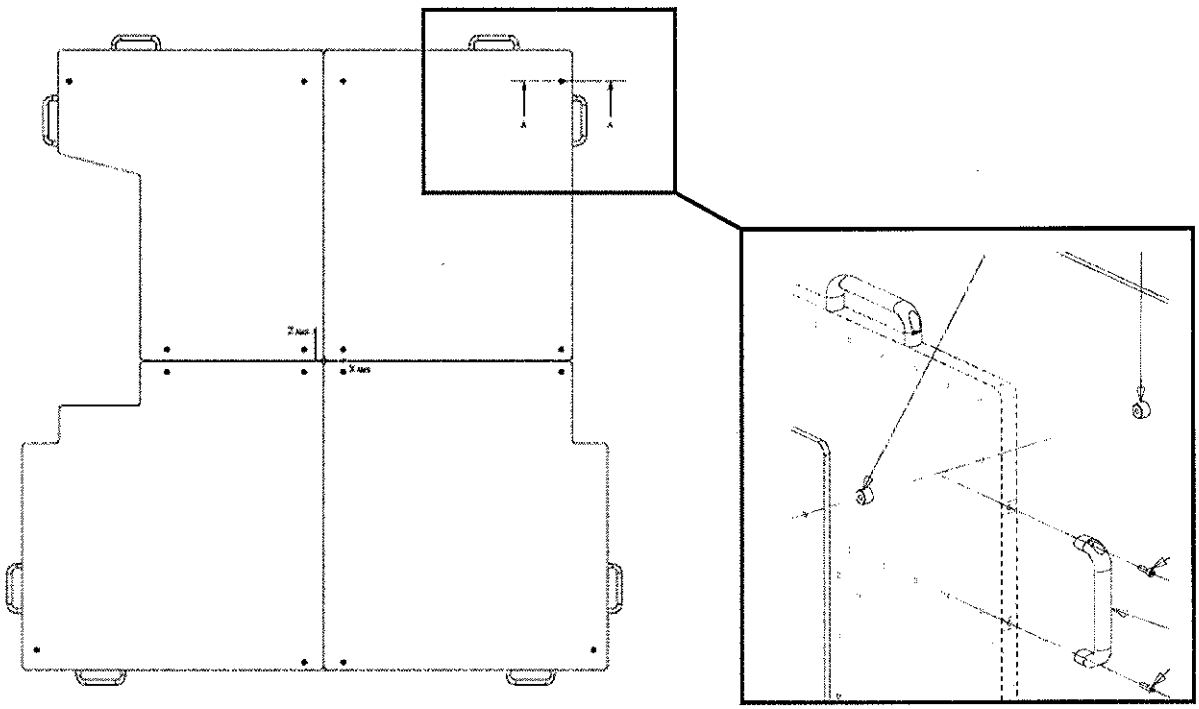

Figure 4.8 – Removable handles

On the radiator (mechanical hardware) shall be also installed thermal and electric hardware like:

- Heaters
- Thermostats
- Connector brackets
- Terminal blocks

In the following Figure 4.9, a typical H/W positioning

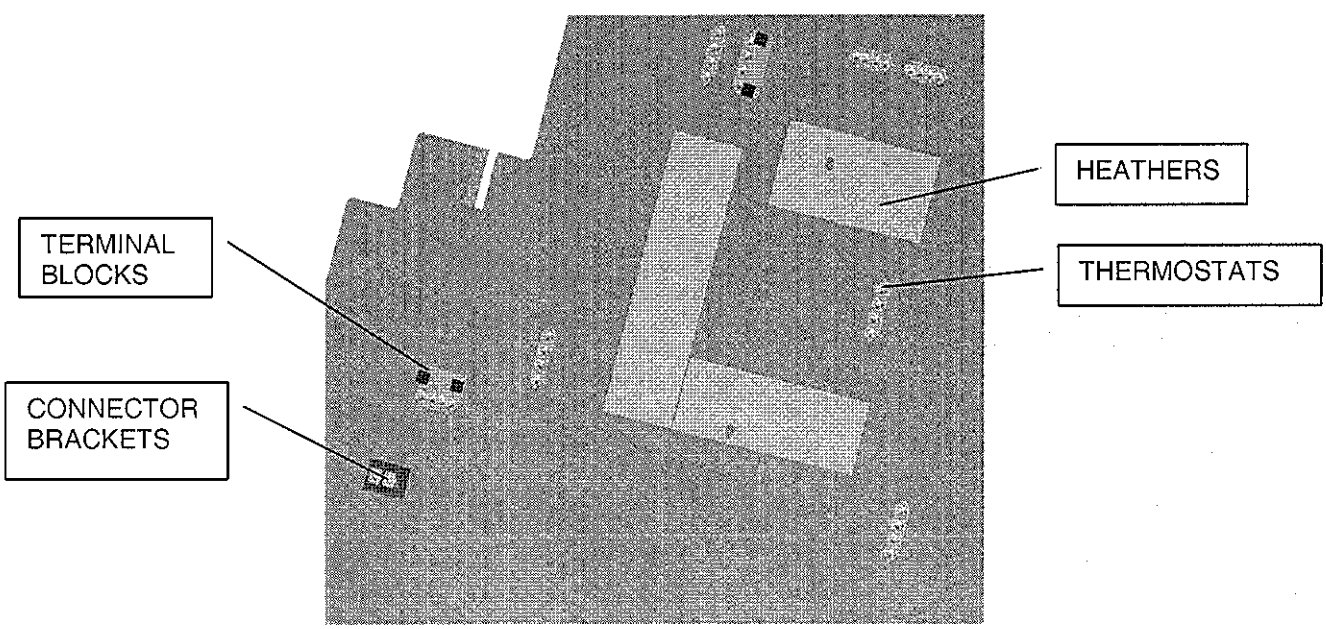

Figure 4.9 - typical H/W positioning

On each radiator, the two skins shall be bonded together as detailed in Figure 4.10

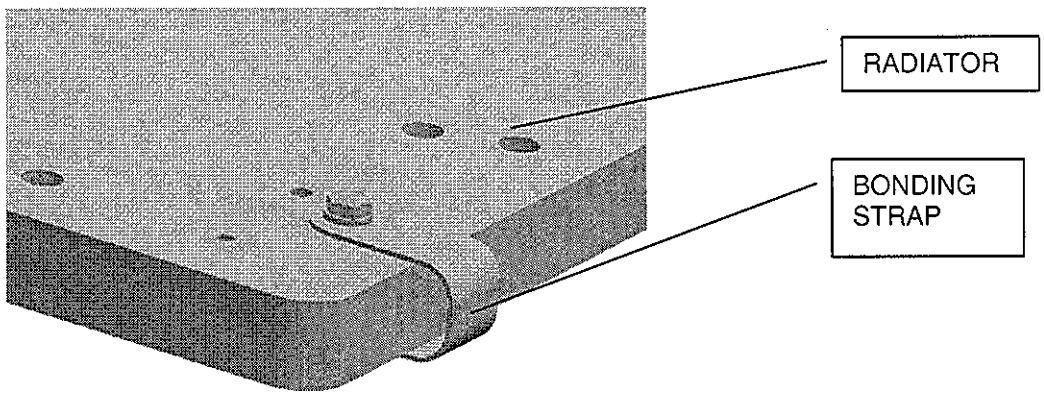

Figure 4.10 – Skin to skin bonding

Each radiator assy shall be also bonded with the USS. In the following Figure 4.11, a typical radiator / USS bonding

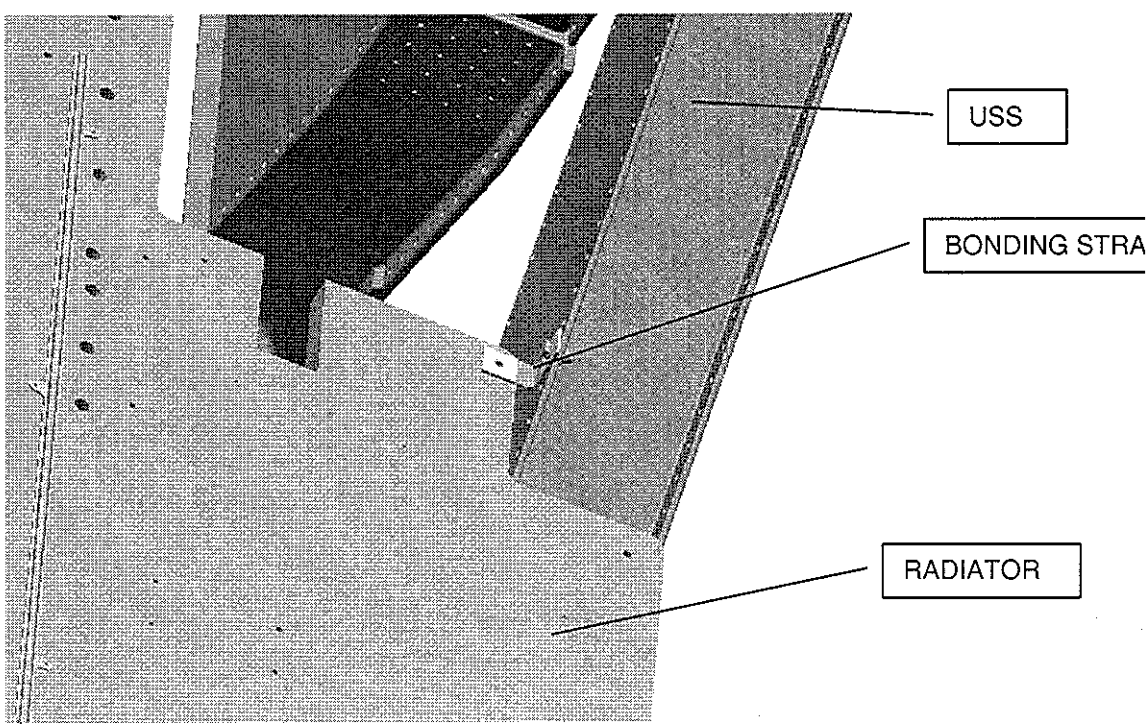

Figure 4.11 – Radiator / USS bonding

4.1 RAM RADIATOR DESIGN DESCRIPTION

In Figure 4.1.1 a Ram Radiator Assy 3d overview is shown, while all the technical engineering data are collected in Table 4.1.2
The detailed design information are available in the Ram Radiator Engineering Drawings and Part List in [AD1] and [AD2].

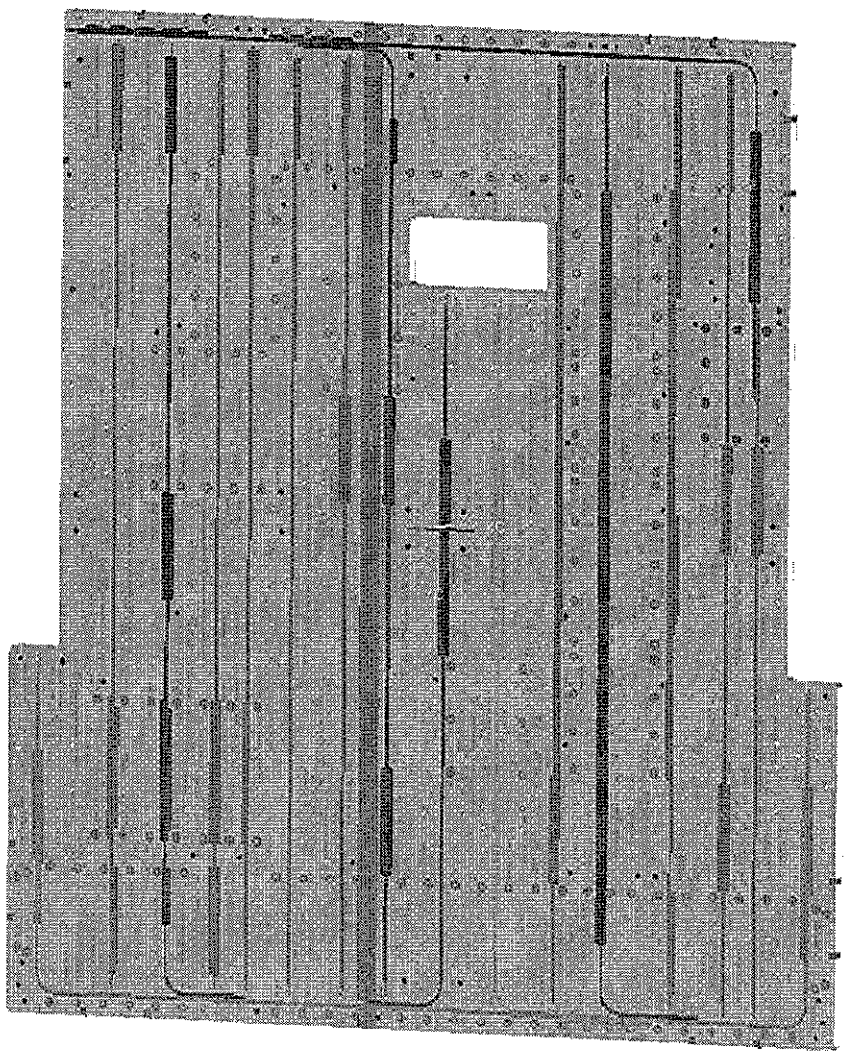

Figure 4.1.1 – Ram Radiator Assy

RAM RADIATOR ASSY

Part/Activity Name's	Material/Treatment	Supplier	Remarks
Inner Skin material (Crates side)	Aluminium Alloy 2024 T81 (Sheet) Spec. AMS-QQ-A-250/4 Thickness 0.51mm	Alcoa Copper & Brass or equivalent	The row material shall be according to [AD7]
Outer Skin material (Radiative side)	Aluminium Alloy 2024 T81 (Sheet) Spec. AMS-QQ-A-250/4 Thickness 0.51mm	Alcoa Copper & Brass or equivalent	The row material shall be according to [AD7]
Skin Butt Joint material	Aluminium Alloy 2024 T81 (Sheet) Spec. AMS-QQ-A-250/4 Thickness 0.51mm	Alcoa Copper & Brass or equivalent	The row material shall be according to [AD7]
Inner Skin (Crates side) Surface treatment	**EXTERNAL SURFACE (Crates interface)**		Primer EC 3924B shall be applied within 8 hours to the anodic coating treatment
	Alodine 1200 acc. to MIL-C-5541 Class 3	AIDC	
	Anodic Coating Acc. to MIL-A-8625 Type 1 Class 1 (NOT SEALED)	AIDC	
	INTERNAL SURFACE (Rohacell interface)		
	Anodic Coating Acc. to MIL-A-8625 Type 1 Class 1 (NOT SEALED)	AIDC	
	Epoxy Primer Coating Acc. to EC 3924B	3M	
Outer Skin (Radiative side) surface treatment	**EXTERNAL SURFACE (Radiative Side)**		
	Alodine 1200 acc. to MIL-C-5541 Class 3	AIDC	
	White Paint SG121FD (Some areas shall not be painted)	AIDC	
	INTERNAL SURFACE (Rohacell interface)		
	Anodic Coating Acc. to MIL-A-8625 Type 1 Class 1 (NOT SEALED)	AIDC	
	Epoxy Primer Coating Acc. to EC 3924B	3M	
Butt joint surface (both) treatment	Anodic Coating Acc. to MIL-A-8625 Type 1 Class 1 (NOT SEALED)		
	Epoxy Primer Coating EC 3924B	3M	
Core material	Rohacell 51WF Thickness 25mm	Degussa	Thickness tolerance (± 0.2mm)
Core material surface treatment	Backing before laminate	AIDC	Heating in autoclave
Insert	Aluminium Alloy 7075 T7351 (Bar) Spec. AMS-QQ-A-225/9	Alcoa Copper & Brass or Equivalent	The row material shall be according to [AD7]
Insert surface treatment	Anodic Coating Acc. to MIL-A-8625 Type 1 Class 1 (NOT SEALED)	AIDC	Primer EC 3924B shall be applied within 8 hours to the anodic coating treatment
	Epoxy Primer Coating EC 3924B	3M	
Heat Pipe	Aluminium Alloy 6063 T5, filled with high purity ammonia.	IBERESPACIO	

Part/Activity Name's	Material/Treatment	Supplier	Remarks
Heat Pipe surface treatment	Anodic Coating Acc. to MIL-A-8625 Type 1 Class 1 (NOT SEALED)	AIDC	Primer EC 3924B shall be applied within 8 hours to the anodic coating treatment
	Epoxy Primer Coating EC 3924B	3M	
Heat Pipe Venting holes		AIDC	See CGS Engineering Drawing
Close Out	Scotch-Weld Epoxy Adhesive 2216 B/A Gray	3M	60% EC2216 40% IG101
	ECCOSPHERES IG101	Emerson & Cuming	
Filled Areas	Scotch-Weld Epoxy Adhesive 2216 B/A Gray	3M	40% EC2216 60% IG101
	ECCOSPHERES G101	Emerson & Cuming	
Film adhesive for skin and butt joint	Redux 312 (300 g/m2)	Hexcel	
Epoxy Adhesive for: Heat Pipe	Scotch-Weld Epoxy Adhesive 2216 B/A Gray	3M	
Epoxy Adhesive for: Insert	Epoxy Paste Adhesive Hysol EA 934 NA	Loctite	

Panel inner surface (crates side)	Total Planarity	1.5 mm
Panel inner surface (crates side)	Local Planarity (500x500mm)	0.25 mm
Panel outer surface (Radiative side)	Total Planarity	2 mm
Panel outer surface (Radiative side)	Local Planarity (500x500mm)	0.5 mm

Table 4.1.2 –Ram Radiator Technical Data

4.2 WAKE RADIATOR DESIGN DESCRIPTION

In Figure 4.2.1 a Wake Radiator Assy 3d overview is shown, while all the technical engineering data are collected in Table 4.2.2
The detailed design information are available in the Wake Radiator Engineering Drawings and Part List in [AD3] and [AD4].

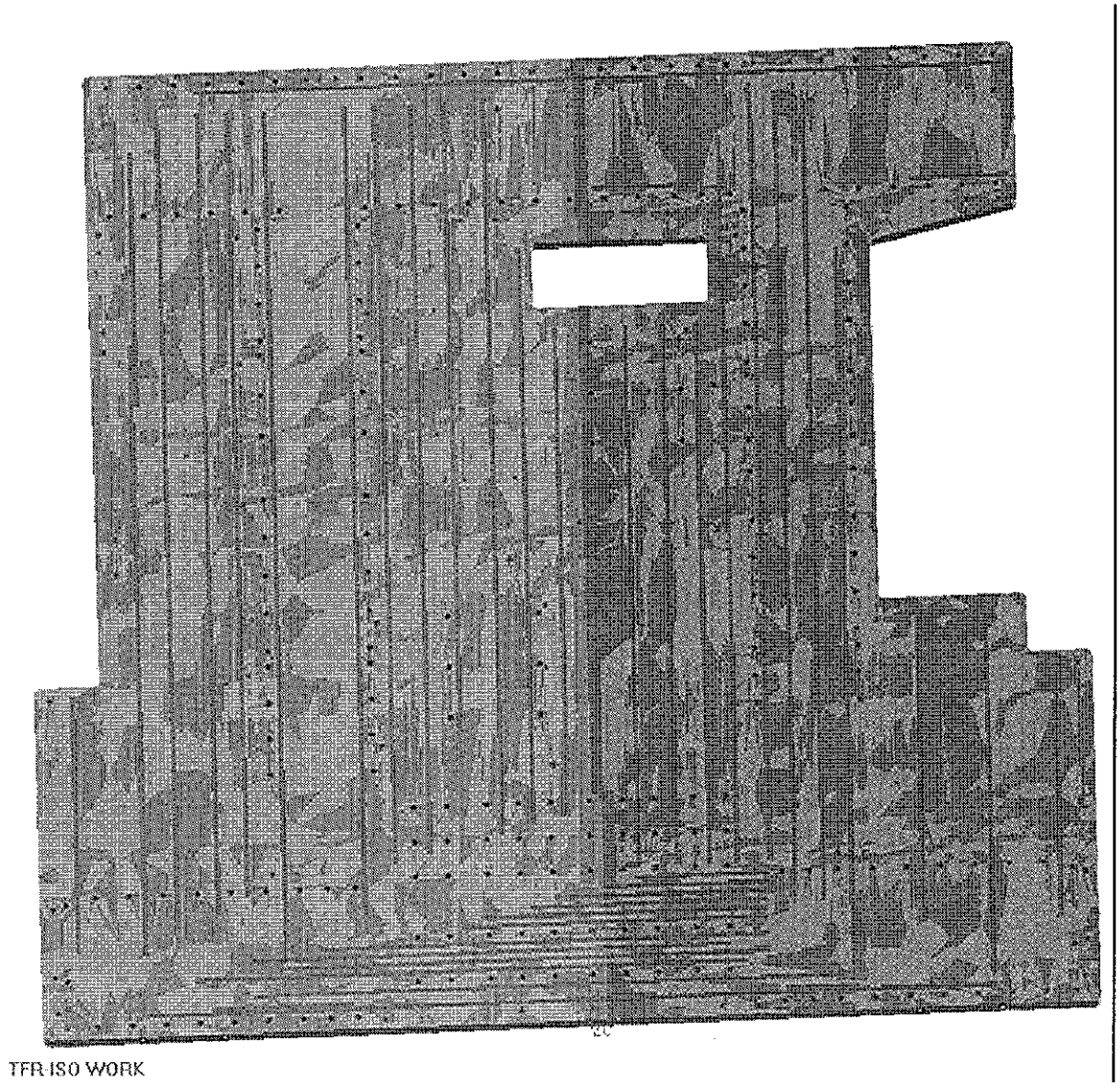

Figure 4.2.1 – Wake Radiator Assy

WAKE RADIATOR ASSY

Part/Activity Name's	Material/Treatment	Supplier	Remarks
Inner Skin material (Crates side)	Aluminium Alloy 2024 T81 (Sheet) Spec. AMS-QQ-A-250/4 Thickness 0.51mm	Alcoa Copper & Brass or equivalent	The row material shall be according to [AD7]
Outer Skin material (Radiative side)	Aluminium Alloy 2024 T81 (Sheet) Spec. AMS-QQ-A-250/4 Thickness 0.51mm	Alcoa Copper & Brass or equivalent	The row material shall be according to [AD7]
Skin Butt Joint material	Aluminium Alloy 2024 T81 (Sheet) Spec. AMS-QQ-A-250/4 Thickness 0.51mm	Alcoa Copper & Brass or equivalent	The row material shall be according to [AD7]
Inner Skin (Crates side) Surface treatment	**EXTERNAL SURFACE (Crates interface)**		Primer EC 3924B shall be applied within 8 hours to the anodic coating treatment
	Alodine 1200 acc. to MIL-C-5541 Class 3	AIDC	
	Anodic Coating Acc. to MIL-A-8625 Type 1 Class 1 (NOT SEALED	AIDC	
	INTERNAL SURFACE (Rohacell interface)		
	Anodic Coating Acc. to MIL-A-8625 Type 1 Class 1 (NOT SEALED)	AIDC	
	Epoxy Primer Coating Acc. to EC 3924B	3M	
Outer Skin (Radiative side) surface treatment	**EXTERNAL SURFACE (Radiative Side)**		
	Alodine 1200 acc. to MIL-C-5541 Class 3	AIDC	
	White Paint SG121FD (Some areas shall not be painted)	AIDC	
	INTERNAL SURFACE (Rohacell interface)		
	Anodic Coating Acc. to MIL-A-8625 Type 1 Class 1 (NOT SEALED)	AIDC	
	Epoxy Primer Coating Acc. to EC 3924B	3M	
Butt joint surface (both) treatment	Anodic Coating Acc. to MIL-A-8625 Type 1 Class 1 (NOT SEALED)		
	Epoxy Primer Coating EC 3924B	3M	
Core material	Rohacell 51WF Thickness 25mm	Degussa	Thickness tolerance (± 0.2mm)
Core material surface treatment	Backing before laminate	AIDC	Heating in autoclave
Insert	Aluminium Alloy 7075 T7351 (Bar) Spec. AMS-QQ-A-225/9	Alcoa Copper & Brass or Equivalent	The row material shall be according to [AD7]
Insert surface treatment	Anodic Coating Acc. to MIL-A-8625 Type 1 Class 1 (NOT SEALED)	AIDC	Primer EC 3924B shall be applied within 8 hours to the anodic coating treatment
	Epoxy Primer Coating EC 3924B	3M	
Heat Pipe	Aluminium Alloy 6063 T5, filled with high purity ammonia.	IBERESPACIO	

Part/Activity Name's	Material/Treatment	Supplier	Remarks
Heat Pipe surface treatment	Anodic Coating Acc. to MIL-A-8625 Type 1 Class 1 (NOT SEALED)	AIDC	Primer EC 3924B shall be applied within 8 hours to the anodic coating treatment
	Epoxy Primer Coating EC 3924B	3M	
Heat Pipe Venting holes		AIDC	See CGS Engineering Drawing
Close Out	Scotch-Weld Epoxy Adhesive 2216 B/A Gray	3M	60% EC2216 40% IG101
	ECCOSPHERES IG101	Emerson & Cuming	
Filled Areas	Scotch-Weld Epoxy Adhesive 2216 B/A Gray	3M	40% EC2216 60% IG101
	ECCOSPHERES G101	Emerson & Cuming	
Film adhesive for skin and butt joint	Redux 312 (300 g/m2)	Hexcel	
Epoxy Adhesive for: Heat Pipe	Scotch-Weld Epoxy Adhesive 2216 B/A Gray	3M	
Epoxy Adhesive for: Insert	Epoxy Paste Adhesive Hysol EA 934 NA	Loctite	

Panel inner surface (crates side)	Total Planarity	1.5 mm
Panel inner surface (crates side)	Local Planarity (500x500mm)	0.25 mm
Panel outer surface (Radiative side)	Total Planarity	2 mm
Panel outer surface (Radiative side)	Local Planarity (500x500mm)	0.5 mm

Table 4.2.2 – Wake Radiator Technical Data

4.3 TRACKER RADIATOR DESIGN DESCRIPTION

In Figure 4.3.1 a Tracker Radiator Assy 3d overview is shown, while all the technical engineering data are collected in Table 4.3.2
The detailed design information are available in the Tracker Radiator Engineering Drawings and Part List in [AD5] and [AD6].

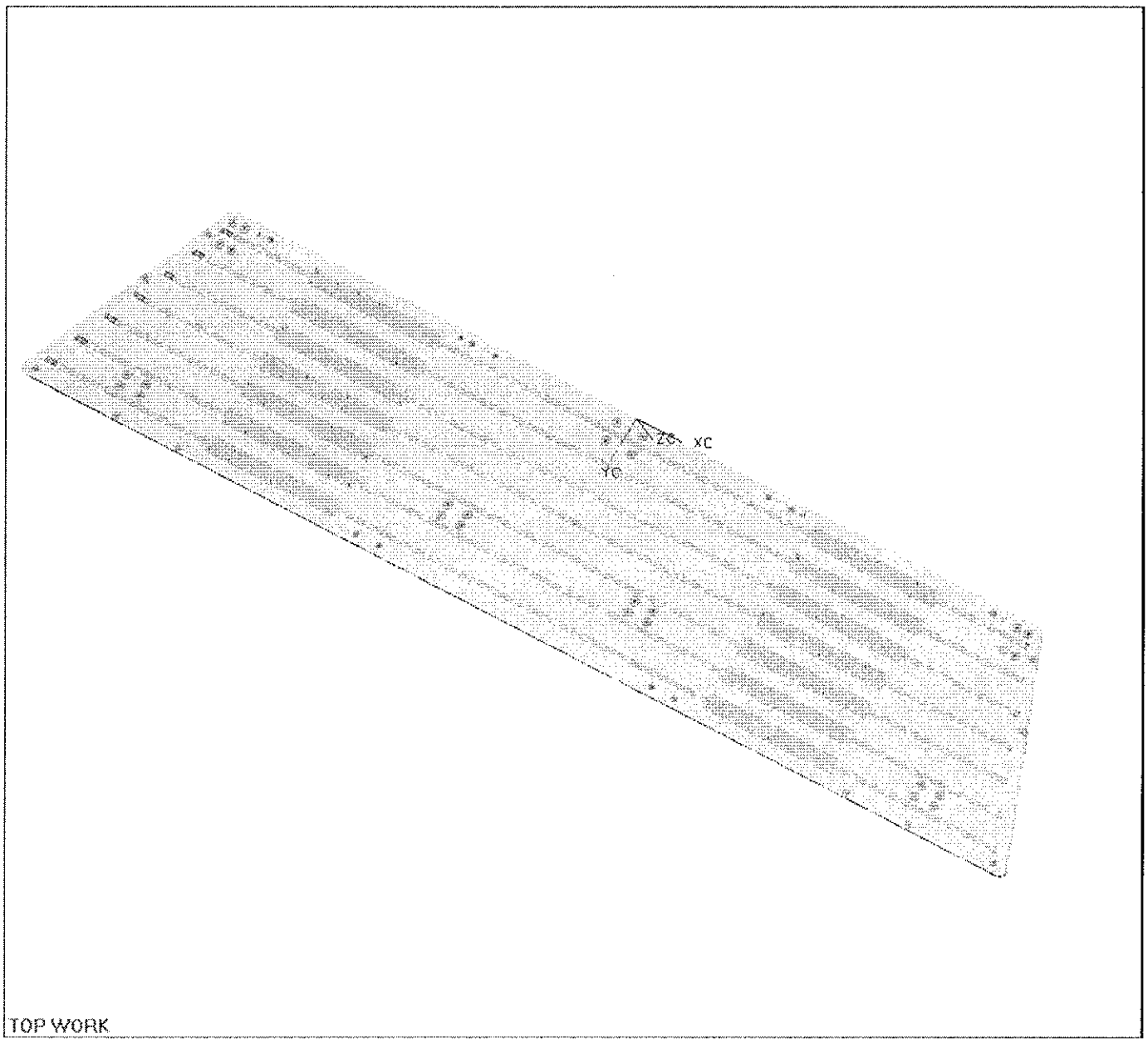

Figure 4.3.1 – Tracker Radiator Assy

TRACKER RADIATORS ASSY

Part/Activity Name's	Material/Treatment	Producer	Remarks
Inner Skin material (TTCS side)	Aluminium Alloy 2024 T81 (Sheet) Spec. AMS-QQ-A-250/4 Thickness 0.2 mm	Alcoa Copper & Brass or equivalent	The row material shall be according to [AD7]
Outer Skin material (Radiative side)	Aluminium Alloy 2024 T81 (Sheet) Spec. AMS-QQ-A-250/4 Thickness 0.81 mm	Alcoa Copper & Brass or equivalent	The row material shall be according to [AD7]
Inner Skin (TTCS Side) surface treatment	**EXTERNAL SURFACE (TTCS interface)**		Primer EC 3924B shall be applied within 8 hours to the anodic coating treatment
	Alodine 1200 acc. to MIL-C-5541 Class 3	AIDC	
	INTERNAL SURFACE (Rohacell interface)		
	Anodic Coating Acc. to MIL-A-8625 Type 1 Class 1 (NOT SEALED)	AIDC	
	Epoxy Primer Coating EC 3924B	3M	
Outer Skin (Radiative side) surface treatment	**EXTERNAL SURFACE (Radiative Side)**		
	Alodine 1200 acc. to MIL-C-5541 Class 3	AIDC	
	White Paint SG121FD (Some areas shall not be painted)	AIDC	
	INTERNAL SURFACE (Rohacell interface)		
	Anodic Coating Acc. to MIL-A-8625 Type 1 Class 1 (NOT SEALED)	AIDC	
	Epoxy Primer Coating EC 3924B	3M	
Butt joint surface (both) treatment	Anodic Coating Acc. to MIL-A-8625 Type 1 Class 1 (NOT SEALED) Epoxy Primer Coating EC 3924B	AIDC 3M	
Core material	Rohacell 51WF Thickness 14mm	Degussa	Thickness tolerance (± 0.2mm)
Core material surface treatment	Backing before laminate		Heating in autoclave
Insert	Aluminium Alloy 7075 T7351 (Bar) Spec. AMS-QQ-A-225/9	Alcoa Copper & Brass or Equivalent	The row material shall be according to [AD7]
Insert surface treatment	Anodic Coating Acc. to MIL-A-8625 Type 1 Class 1 (NOT SEALED)	AIDC	Primer EC 3924B shall be applied within 8 hours to the anodic coating treatment
	Epoxy Primer Coating EC 3924B	3M	
Heat Pipe	Aluminium Alloy 6063 T5, filled with high purity ammonia.	IBERESPACIO	
Heat Pipe surface treatment	Anodic Coating Acc. to MIL-A-8625 Type 1 Class 1 (NOT SEALED)	AIDC	Primer EC 3924B shall be applied within 8 hours to the anodic coating treatment
	Epoxy Primer Coating EC 3924B	3M	

Part/Activity Name's	Material/Treatment	Producer	Remarks
Heat pipe filling surface	Scotch-Weld Epoxy Adhesive 2216 B/A Gray	3M	50% EC2216 50% IG101 To fill the two HP external surfaces in order to fit with the Rohacell slots surface
	ECCOSPHERES IG101	Emerson & Cuming	
Close Out	Scotch-Weld Epoxy Adhesive 2216 B/A Gray	3M	60% EC2216 40% IG101
	ECCOSPHERES IG101	Emerson & Cuming	
Filled Areas	Scotch-Weld Epoxy Adhesive 2216 B/A Gray	3M	40% EC2216 60% IG101
	ECCOSPHERES IG101	Emerson & Cuming	
Film adhesive for skin and butt joint (if any)	Redux 312 (300 g/m2)	Hexcel	
Epoxy Adhesive for: Heat Pipe	Scotch-Weld Epoxy Adhesive 2216 B/A Gray	3M	
Epoxy Adhesive for: Insert	Epoxy Paste Adhesive Hysol EA 934 NA	Loctite	
Panel inner surface (Condenser Side)	Total Planarity	1.5 mm	
Panel inner surface (Condenser Side)	Local Planarity (500x500mm)	0.25 mm	
Panel outer surface (Radiative side)	Total Planarity	2 mm	
Panel outer surface (Radiative side)	Local Planarity (500x500mm)	0.5 mm	

Table 4.3.2 – Tracker Radiator Technical Data