ORIGINALE ARCHIVIO

CARLO GAVAZZI

CARLO GAVAZZI SPACE SpA

AMS02 - TCS

Tipo Doc.: *Doc.Type:*	TECHNICAL NOTE			N° DRD: *DRD N°:*	DEL 078
N° Doc.: *Doc. N°:*	**AMSTCS-IC-CGS-002**	Ediz.: *Issue:* **1**	Data: *Date:* **31/03/2008**	Pagina *Page* **1**	Di *Of* **30**
Titolo : *Title :*	CRYO TCS AND SUPPORT BEAMS ICD				

	Nome & Funzione *Name & Function*	Firma *Signature*	Data *Date*
Preparato da: *Prepared by:*	A. Franzoso (DT/MT) G. Duchini (DT/MT)		31/03/2008
Approvato da: *Approved by:*	M. Molina (DT/MT) C. Vettore (DT/MT) L. Cremonesi (PA/QA) C. Cinquepalmi (PA/CC)	Molina L. Cremonesi C. Cinquepalmi	31-3-2008 31/03/2008 31.03.08 31.03.08
Applicazione autorizzata da: *Application authorized by:*	M. Olivier (PM)	M. Olivier	31.03.08

Customer / Higher Level Contractor			
Accettato da: *Accepted by:*			
Approvato da: *Approved by:*			

LISTA DI DISTRIBUZIONE *DISTRIBUTION LIST*	N	A	I
Interna / *Internal*			
Esterna / *External* E. Russo (ASI)			x

N=Numero di copie A=Applicazione I=Informazione
N=Number of copy A=Application I=Information

Gestione documenti: *Data Management:* Firma / *Signature* 31/03/08 Data / *Date*

File: AMSTCS-IC-CGS-002_Issue1.doc

Questo documento contiene informazioni di proprietà di CARLO GAVAZZI SPACE SpA: Tutti i diritti sono riservati
All information contained in this document are property of CARLO GAVAZZI SPACE SpA. All right reserved.

REGISTRAZIONE DELLE MODIFICHE / *CHANGE RECORD*

EDIZIONE *ISSUE*	DATA *DATE*	AUTORIZZAZIONE *CHANGE AUTHORITY*	OGGETTO DELLA MODIFICA E SEZIONI AFFETTE *REASON FOR CHANGE AND AFFECTED SECTIONS*
1	31/03/2008		First Issue

Questo documento contiene informazioni di proprietà di CARLO GAVAZZI SPACE SpA: Tutti i diritti sono riservati
All information contained in this document are property of CARLO GAVAZZI SPACE SpA. All right reserved.

LISTA DELLE PAGINE VALIDE / *LIST OF VALID PAGES*

PAGINA *PAGE*	EDIZIONE *ISSUE*	PAGINA *PAGE*	EDIZIONE *ISSUE*	PAGINA *PAGE*	EDIZIONE *ISSUE*	PAGINA *PAGE*	EDIZIONE *ISSUE*	PAGINA *PAGE*	EDIZIONE *ISSUE*
1 - 30	1								

Questo documento contiene informazioni di proprietà di CARLO GAVAZZI SPACE SpA: Tutti i diritti sono riservati
All information contained in this document are property of CARLO GAVAZZI SPACE SpA. All right reserved.

TABLE OF CONTENT

1. SCOPE 6

2. APPLICABLE AND REFERENCE DOCUMENTS 6

2.1 APPLICABLE DOCUMENTS 6
2.2 REFERENCE DOCUMENTS 7

3. MECHANICAL INTERFACES 8

3.1 ZENITH RADIATOR I/FS TO TRD (SPOKES AND BRACKETS) 8
3.1.1 SPOKES 9
3.1.2 ZETA BRACKET 10
3.1.3 STIFF BRACKET 11
3.2 VSB I/F TO VC, LHP TUBES, TTCS TUBES, CRYOMAGNETICS TUBES 12
3.2.1 VERTICAL SUPPORT BEAMS INTERFACES TO VACUUM CASE 12
3.2.1.1 vertical support beam 1 assy / vacuum case interface points 13
3.2.1.2 VERTICAL SUPPORT BEAM 2 ASSY / vacuum case interface points 15
3.2.1.3 VERTICAL SUPPORT BEAM 3 ASSY / vacuum case interface points 17
3.2.2 VERTICAL SUPPORT BEAM TO TTCS TUBES INTERFACES 19
3.2.3 VERTICAL SUPPORT BEAM TO CRYOMAGNETICS TUBES INTERFACES 20
3.2.4 VERTICAL SUPPORT BEAM TO CRYO LHP TRANSPORT LINES INTERFACES 20
3.2.4.1 VSB 1 / CRYO lhp TRANSPORT LINES interfaces 20
3.2.4.2 VSB 3 / CRYO lhp TRANSPORT LINES interfaces 21
3.2.5 VERTICAL SUPPORT BEAMS INTERFACES TO TTCS WIRES 22
3.3 LHP 23

4. THERMAL INTERFACES 25

4.1 ZENITH RADIATOR 25
4.2 SUPPORT BEAMS 25
4.3 LHP 25

5. ELECTRICAL INTERFACES 26

5.1 ZENITH RADIATOR 26
5.2 SUPPORT BEAMS 29
5.3 LHP 29

Questo documento contiene informazioni di proprietà di CARLO GAVAZZI SPACE SpA: Tutti i diritti sono riservati
All information contained in this document are property of CARLO GAVAZZI SPACE SpA. All right reserved.

LIST OF TABLES

Tab. 5-1: PT1000 connectors pin function 29
Tab. 5-2: Heaters connectors pin function 30

LIST OF FIGURES

Fig. 3-1: Spokes 9
Fig. 3-2: Zeta brackets 10
Fig. 3-3: Stiff brackets 11
Fig. 3-4: VSB positioning 12
Fig. 3-5: VSB 1 layout 13
Fig. 3-6: VSB 1 location 13
Fig. 3-7: VSB 1 interface fasteners 14
Fig. 3-8: VSB Interfaces with Upper and Lower Ring 15
Fig. 3-9: VSB 2 layout 15
Fig. 3-10: VSB 2 location 16
Fig. 3-11: VSB 2 interfaces 17
Fig. 3-12: VSB 3 layout 17
Fig. 3-13: VSB 3 location 18
Fig. 3-14: Evaporator bolts 23
Fig. 3-15: Long Evaporator bolts highlighted by arrows 24
Fig. 5-1: Connectors layout 27
Fig. 5-2: Glenair M83513 connector 28
Fig. 5-3: Heaters circular connector 30

Questo documento contiene informazioni di proprietà di CARLO GAVAZZI SPACE SpA: Tutti i diritti sono riservati
All information contained in this document are property of CARLO GAVAZZI SPACE SpA. All right reserved.

1. SCOPE

This document provides the description of the mechanical, thermal and electrical interfaces of the AMS Cryocooler Thermal Control System (TCS) and Vertical Support Beams.

This document corresponds to contract deliverable DEL 078.

2. APPLICABLE AND REFERENCE DOCUMENTS

Documents here below identified are applicable and/or reference for the activities described in the present document and are considered part of it to the extent specified herein.

2.1 APPLICABLE DOCUMENTS

CONTRACTUAL

AD1 Capitolato generale ASI, available on http://www.asi.it/html/norme/cap_gen.pdf

AD2 Richiesta d'offerta per Programma AMS, attività di Fase C/D – Prot. ASI 006194 – 25/07/2007

AD2bis CapitolatoTecnico "Progetto: AMS Attività di fase C/D" Doc. N. DC-IPC-2007-062

AD3 Tailoring di primo livello delle norme ECSS, serie M-E-Q – Progetto AMS attività di fase C/D- Doc. n° DC-IPC-2007-063 Rev. A

MANAGEMENT

AD4 "ECSS Glossary" – Doc. ECSS-P-001 Rev. B

PRODUCT ASSURANCE

AD5 "Product Assurance Requirements - Progetto AMS attività di fase C/D "-Doc. n° DC-IPC-2007-064 Rev. A

AD6 "Istruzione Operativa "Norme per la redazione del Piano di Assicurazione del Prodotto (PA Plan)", Doc. OP-IPC-2005-008

AD7 "Sistemi di Gestione per la Qualità", doc. UNI EN ISO 9001:2000

AD8 "Quality Management Plan for the Alpha Magnetic Spectrometer 02 (AMS-02) Experiment", Doc. JSC63164, Basic Version, 09/21/2005

AD9 "Master Verification Plan (MVP)", Doc. JSC 29788, Iss. Draft, 8/21/2006

AD10 "PA REQUIREMENTS DC-IPC-2007-064 RevA Conformity",doc AMSCD-RQ-CGS-001 issue 1

Questo documento contiene informazioni di proprietà di CARLO GAVAZZI SPACE SpA: Tutti i diritti sono riservati
All information contained in this document are property of CARLO GAVAZZI SPACE SpA. All right reserved.

ENGINEERING AND TECHNICAL

AD11 "Multi-Layer Insulation for the Alpha Magnetic Spectrometer Guidelines", Doc. CTSD-SH-1782, 9/30/2005

AD12 "AMS-02 Structural Verification Plan for the Space Transportation System and the International Space Station", Doc. JSC28792, Iss.D, March 2005

AD13 "Experiment/Payload Integration Hardware Interfaces - Part I", Doc. JSC29095, Iss.A, 06/01/2002

AD14 "Experiment/Payload Integration Hardware Interfaces - Part II", Doc. JSC29095, Iss.A, August 2004

AD15 "Experiment/Vacuum Case Payload Integration Hardware Interface", Doc. JSC29202, Iss.C, March 2005

AD16 "AMS-02 Thermal Control Requirements", Doc. AMS-RQ-CGS-001, Iss.1, April 2007

AD17 "Attached Payload Interface Requirements Document , Doc. SSP 57003, Iss. B, 17/06/03

AD18 "Attached Payload Hardware Interface Control Document, Doc. SSP 57004, Iss. B, 13/06/03

AD19 "AMSPDS-RP-CGS-001", Doc. PDS Design Description, Iss.2, July 05

AD20 "AmsE-PPL", AMS Electronics Preferred Parts List, available on (http://ams.cern.ch/AMS/Electronics/Parts/), Iss.1, Nov 01 configured on doc PDS-LI-CGS-006 iss 1

AD21 "PDS ICD - Interface Control Document", Doc. AMSPDS-IC-CGS-001, Iss.3, July 05

AD22 "PDS Specifications", Doc. AMS-RQ-CGS-002, Iss.1, April 07

2.2 REFERENCE DOCUMENTS

[RD 1] Phase II Flight Safety Data Package for the Alpha Magnetic Spectrometer - 02 (AMS-02) Version Basic JSC49978 , 2006

[RD 2] Alpha Magnetic Spectrometer – 02 Assembly and Testing Integration Plan, Version A, JSC63123, 28-11-2005

[RD 3] Dichiarazione INFN sulla consegna di componenti – lettera del 20 maggio 2007 (prot. ASI n. 0009869)

[RD 4] Capitolato gestionale ASI OP-IPC-2005-010-E

[RD 5] AMS-552-SPEC-001, Revision C, Thermal Requirements for the Interface between the Cryocooler and the External Thermal Control System, January 20, 2006

[RD 6] AMSTCS-TN-CGS-013 iss1, Cryo TCS And Support Beams Design Report, 31/03/2008

[RD 7] AMS-552-PROC-041, revision - , LHP Integration with Cooler Bracket Assembly, March 26, 2007

[RD 8] AMSTCS-TN-CGS-012, issue 1, Cryo TCS Thermal Analysis Report, 31/03/2008.

Questo documento contiene informazioni di proprietà di CARLO GAVAZZI SPACE SpA: Tutti i diritti sono riservati
All information contained in this document are property of CARLO GAVAZZI SPACE SpA. All right reserved.

3. MECHANICAL INTERFACES

The mechanical interfaces between AMS02 H/W and the Cryo TCS (Zenith radiator panel, Vertical Support Beams and LHP system) are in the following detailed

3.1 ZENITH RADIATOR I/FS TO TRD (SPOKES AND BRACKETS)

The four Zenith Radiators Assy interfaces with the TRD main structure via the following listed items:

- 56 Spokes (14 for each Radiator)
- 4 Zeta brackets (1 for each Radiator)
- 4 Stiff brackets (1 for each Radiator)

The interface points are typical for each of the four radiators.
The detailed information for the installation are collected into the engineering drawings

Questo documento contiene informazioni di proprietà di CARLO GAVAZZI SPACE SpA: Tutti i diritti sono riservati
All information contained in this document are property of CARLO GAVAZZI SPACE SpA. All right reserved.

3.1.1 SPOKES

The 56 spokes shall be installed onto the TRD structure in order to work as a support for the four Zenith Radiators. Spokes are positioned onto the TRD structure as detailed in the following Figure 3.1.

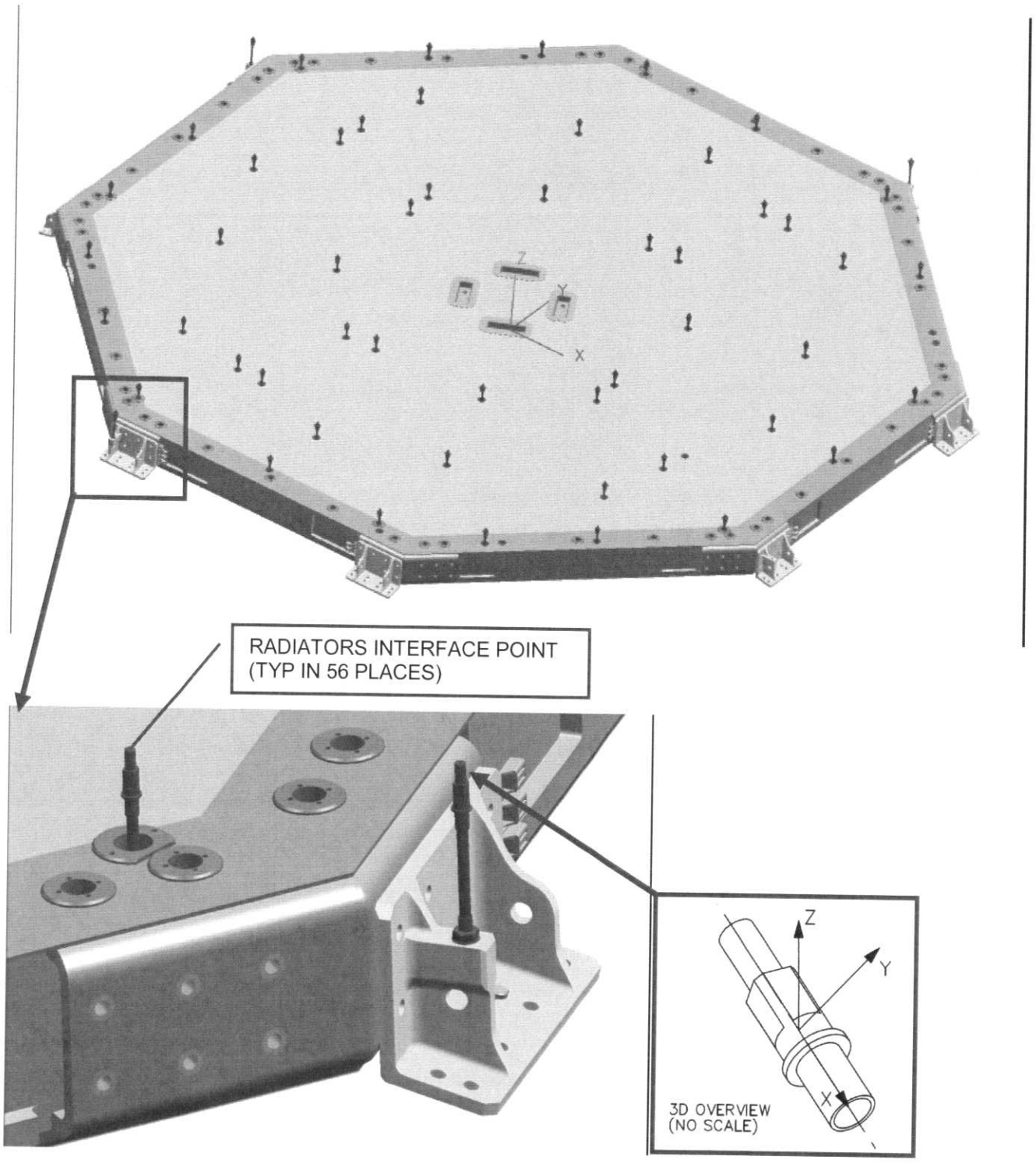

Fig. 3-1: Spokes

Questo documento contiene informazioni di proprietà di CARLO GAVAZZI SPACE SpA: Tutti i diritti sono riservati
All information contained in this document are property of CARLO GAVAZZI SPACE SpA. All right reserved.

3.1.2 ZETA BRACKET

Four Zeta brackets installed onto the TRD structure supply the support for one corner of each Radiator. The interface points are detailed in the below Figure 3.2

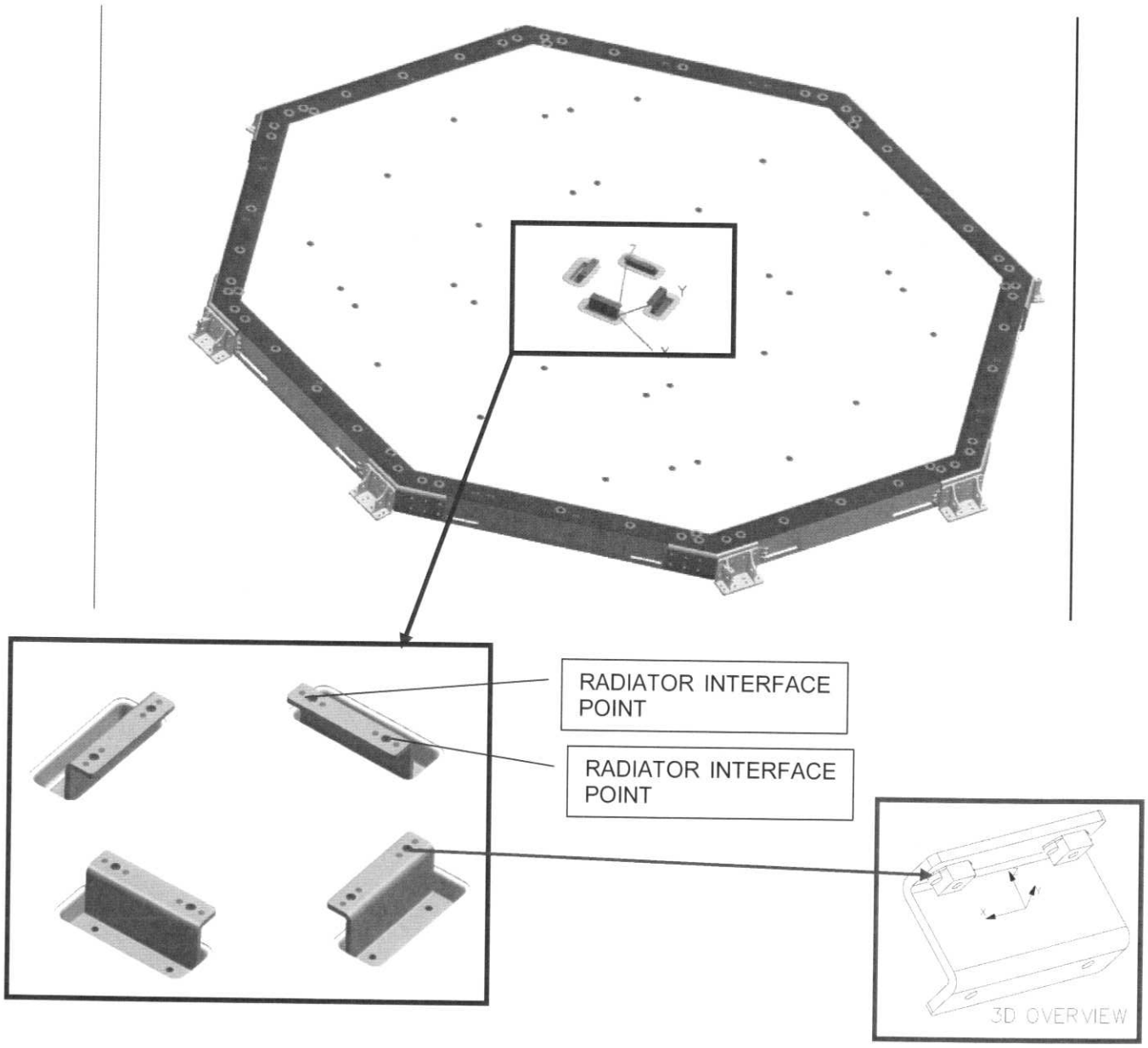

Fig. 3-2: Zeta brackets

Questo documento contiene informazioni di proprietà di CARLO GAVAZZI SPACE SpA: Tutti i diritti sono riservati
All information contained in this document are property of CARLO GAVAZZI SPACE SpA. All right reserved.

3.1.3 STIFF BRACKET

Four Stiff brackets installed onto the TRD structure work as a stiff support for the Radiators
The interface point are detailed in Figure 3-3

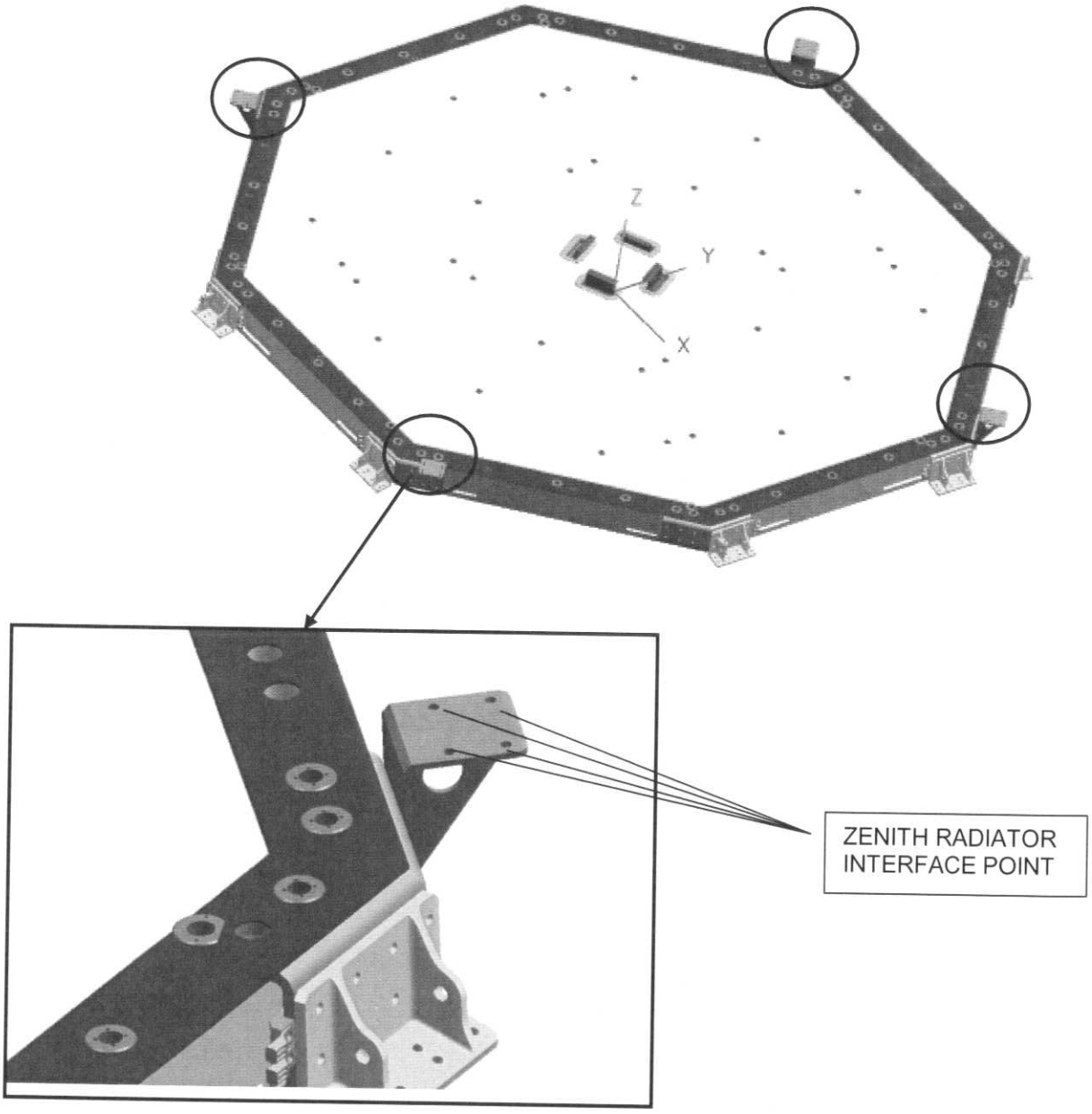

Fig. 3-3: Stiff brackets

Questo documento contiene informazioni di proprietà di CARLO GAVAZZI SPACE SpA: Tutti i diritti sono riservati
All information contained in this document are property of CARLO GAVAZZI SPACE SpA. All right reserved.

3.2.1.1 VERTICAL SUPPORT BEAM 1 ASSY / VACUUM CASE INTERFACE POINTS

The Vertical Support Beam 1 Assy, P/N 40-AMS02TCS-281.00.00, is detailed in the following Figure.

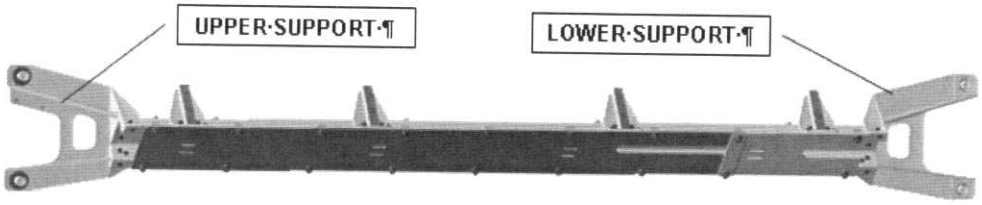

Fig. 3-5: VSB 1 layout

The Vertical Support Beam 1 has to be installed onto the AMS02 Cryomagnet Vacuum Case by means of four screws as detailed in the next Figures.

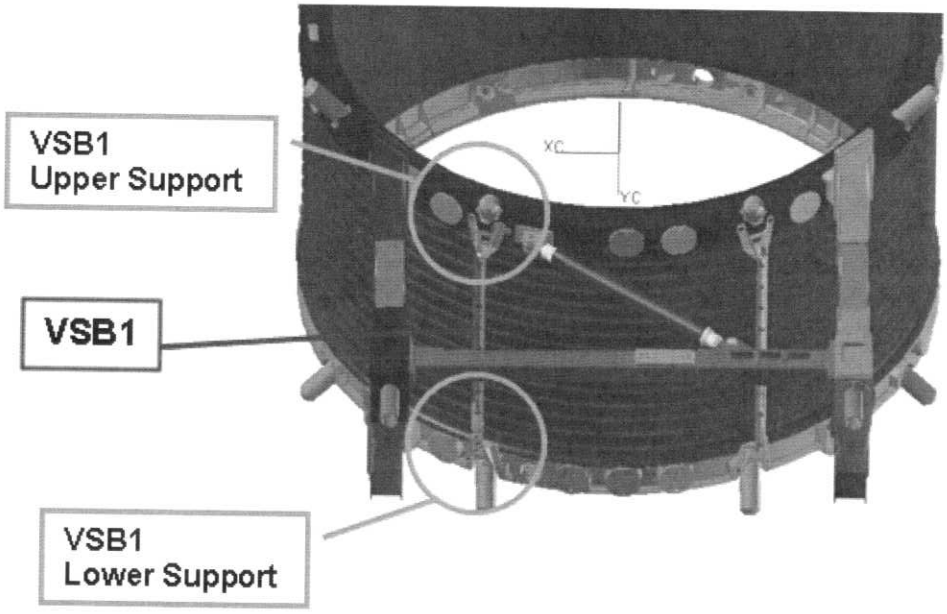

Fig. 3-6: VSB 1 location

Questo documento contiene informazioni di proprietà di CARLO GAVAZZI SPACE SpA: Tutti i diritti sono riservati
All information contained in this document are property of CARLO GAVAZZI SPACE SpA. All right reserved.

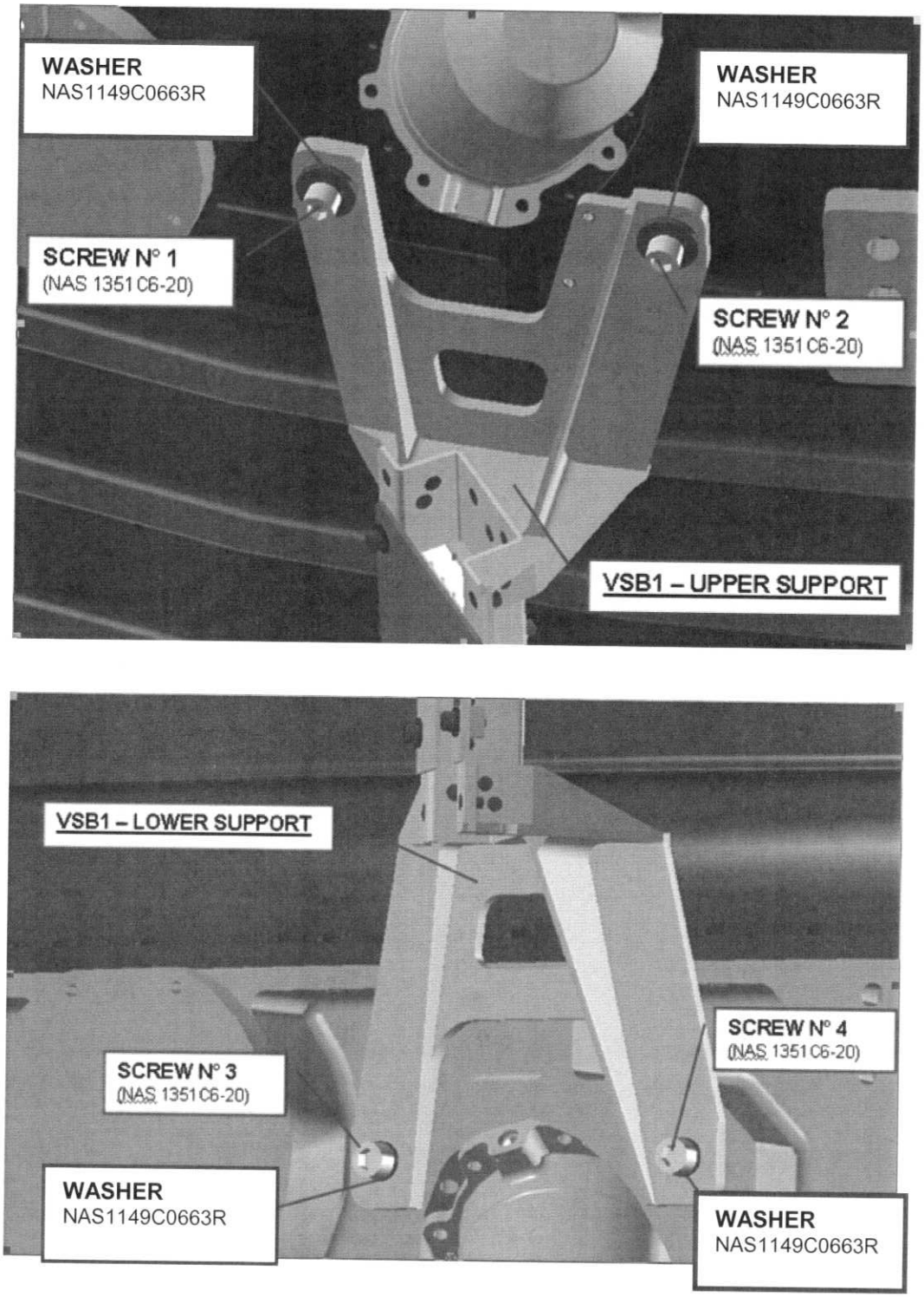

Fig. 3-7: VSB 1 interface fasteners

The VSB 1 interface points with the Upper and Lower Vacuum Case Rings are shown in the following Fig. 3.8.

Questo documento contiene informazioni di proprietà di CARLO GAVAZZI SPACE SpA: Tutti i diritti sono riservati
All information contained in this document are property of CARLO GAVAZZI SPACE SpA. All right reserved.

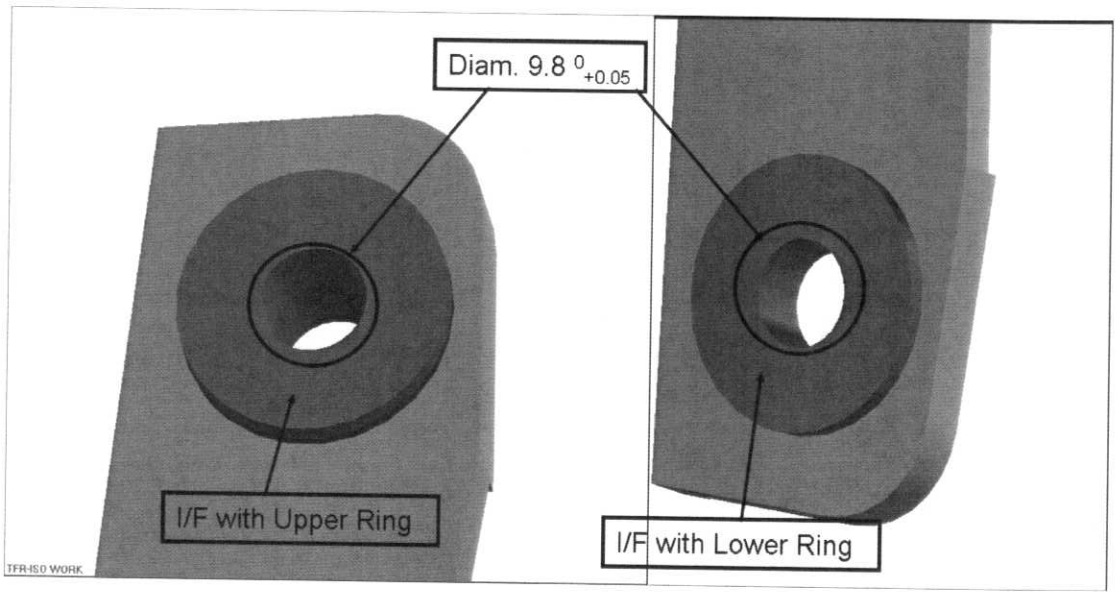

Fig. 3-8: VSB Interfaces with Upper and Lower Ring

3.2.1.2 VERTICAL SUPPORT BEAM 2 ASSY / VACUUM CASE INTERFACE POINTS

The Vertical Support Beam 2 Assy, P/N 40-AMS02TCS-282.00.00, is detailed in the following Figure 3.9

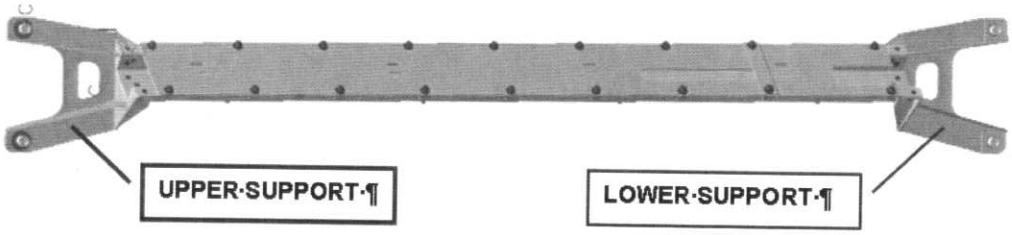

Fig. 3-9: VSB 2 layout

The Vertical Support Beam 2 has to be installed onto the AMS02 Cryomagnet Vacuum Case by means of four screws as detailed in next Figures.

Questo documento contiene informazioni di proprietà di CARLO GAVAZZI SPACE SpA: Tutti i diritti sono riservati
All information contained in this document are property of CARLO GAVAZZI SPACE SpA. All right reserved.

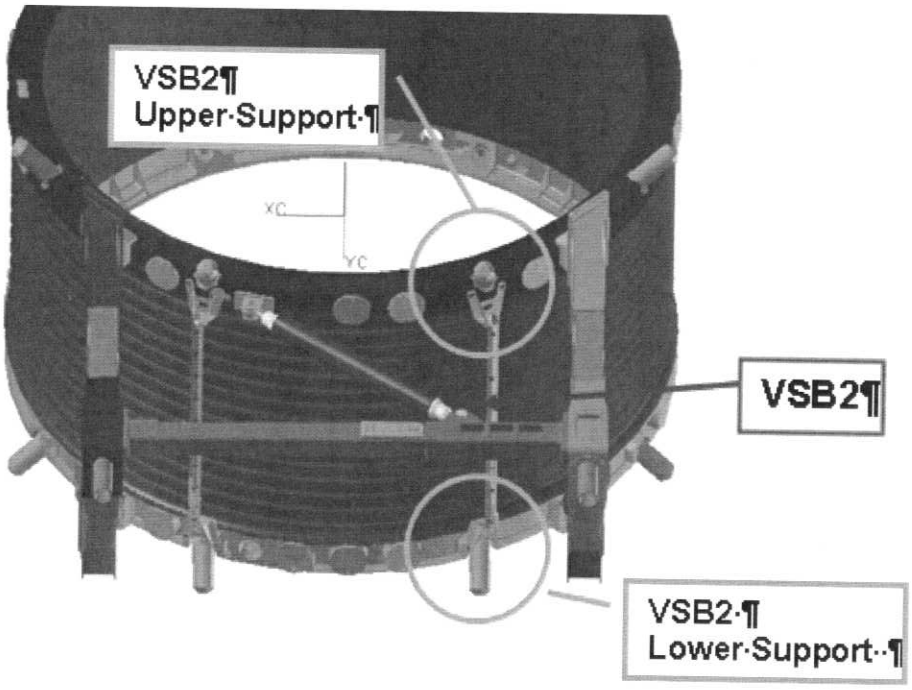

Fig. 3-10: VSB 2 location

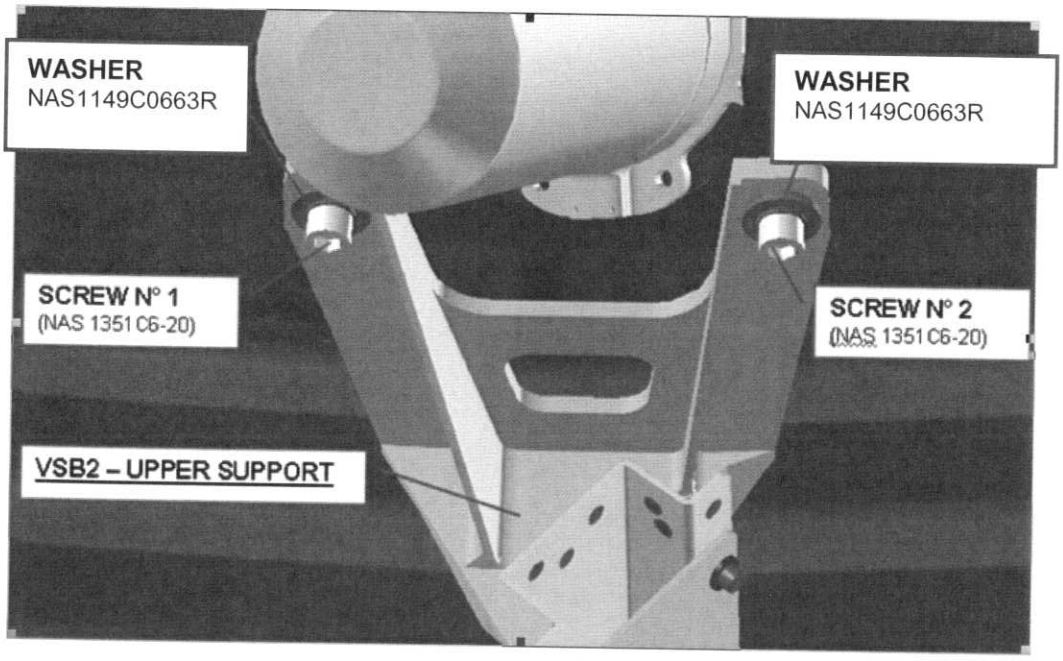

Questo documento contiene informazioni di proprietà di CARLO GAVAZZI SPACE SpA: Tutti i diritti sono riservati
All information contained in this document are property of CARLO GAVAZZI SPACE SpA. All right reserved.

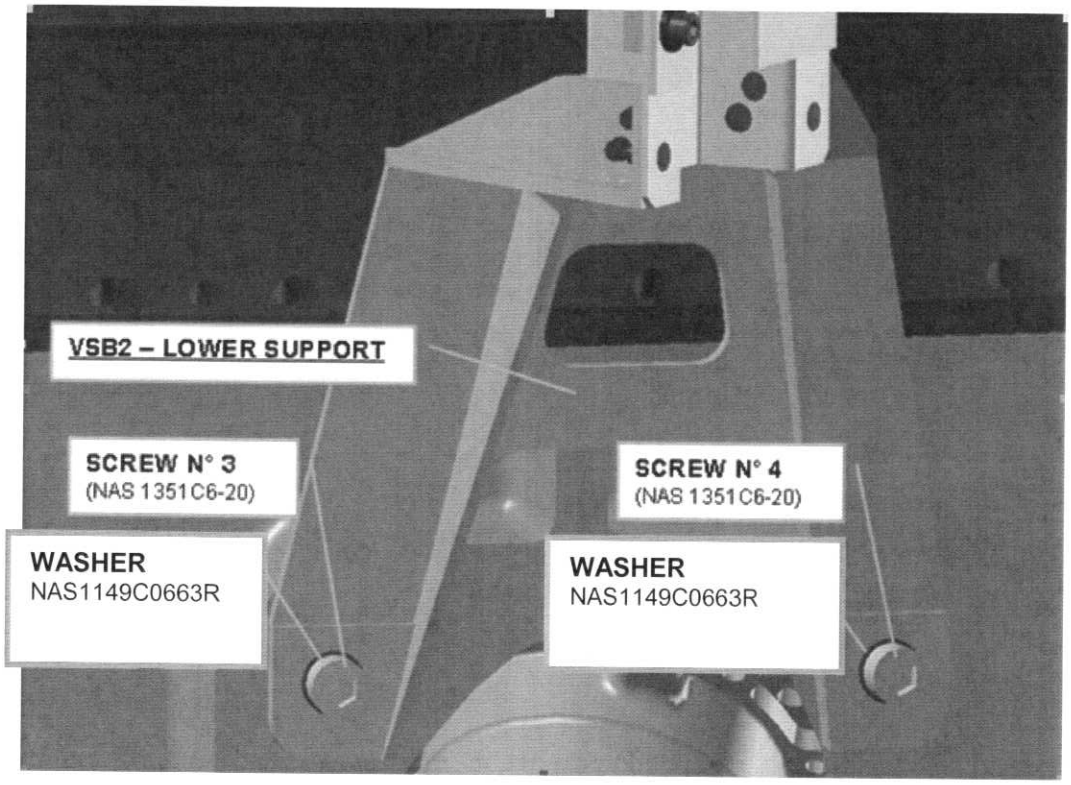

Fig. 3-11: VSB 2 interfaces

3.2.1.3 VERTICAL SUPPORT BEAM 3 ASSY / VACUUM CASE INTERFACE POINTS

The Vertical Support Beam 1 Assy, P/N 40-AMS02TCS-283.00.00, is detailed in the following Figure 3.12.

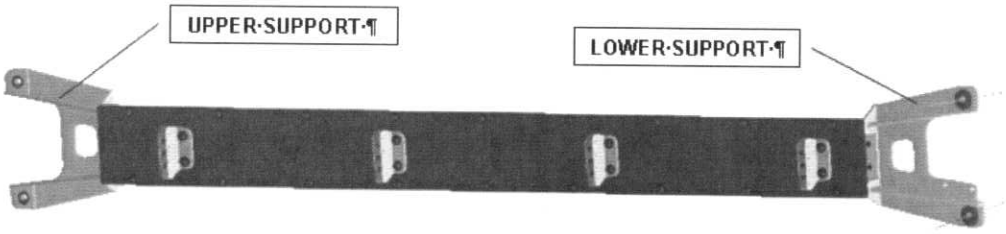

Fig. 3-12: VSB 3 layout

The Vertical Support Beam 3 has to be installed onto the AMS02 Cryomagnet Vacuum Case by means of four screws as detailed in Figure 5.3.3.2.

Questo documento contiene informazioni di proprietà di CARLO GAVAZZI SPACE SpA: Tutti i diritti sono riservati
All information contained in this document are property of CARLO GAVAZZI SPACE SpA. All right reserved.

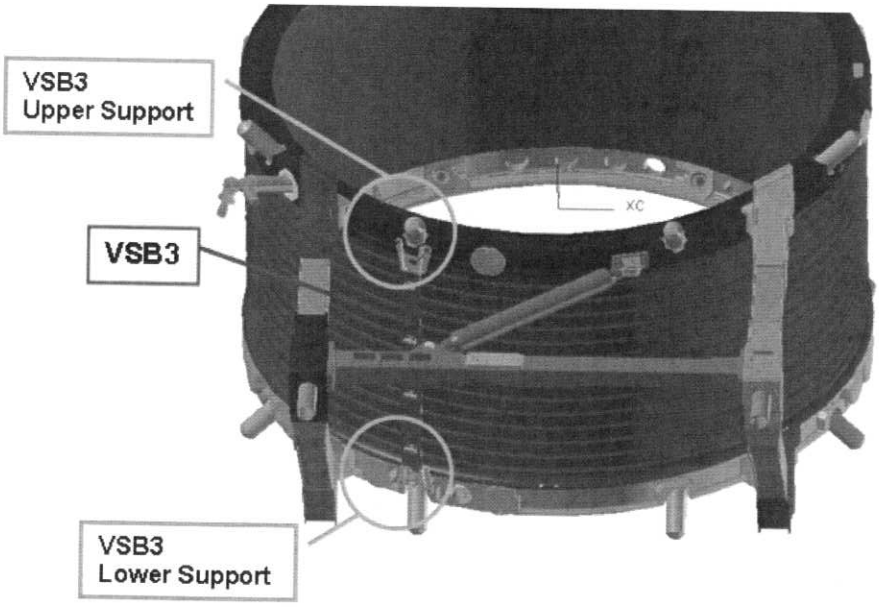

Fig. 3-13: VSB 3 location

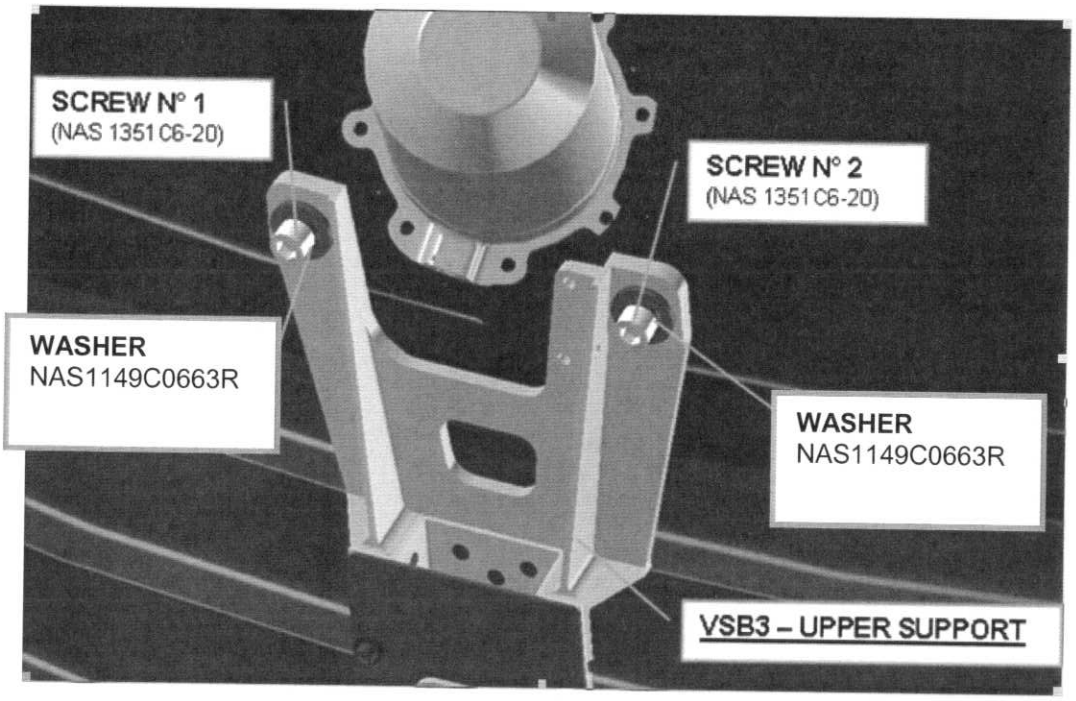

Fig. 3-14

Questo documento contiene informazioni di proprietà di CARLO GAVAZZI SPACE SpA: Tutti i diritti sono riservati
All information contained in this document are property of CARLO GAVAZZI SPACE SpA. All right reserved.

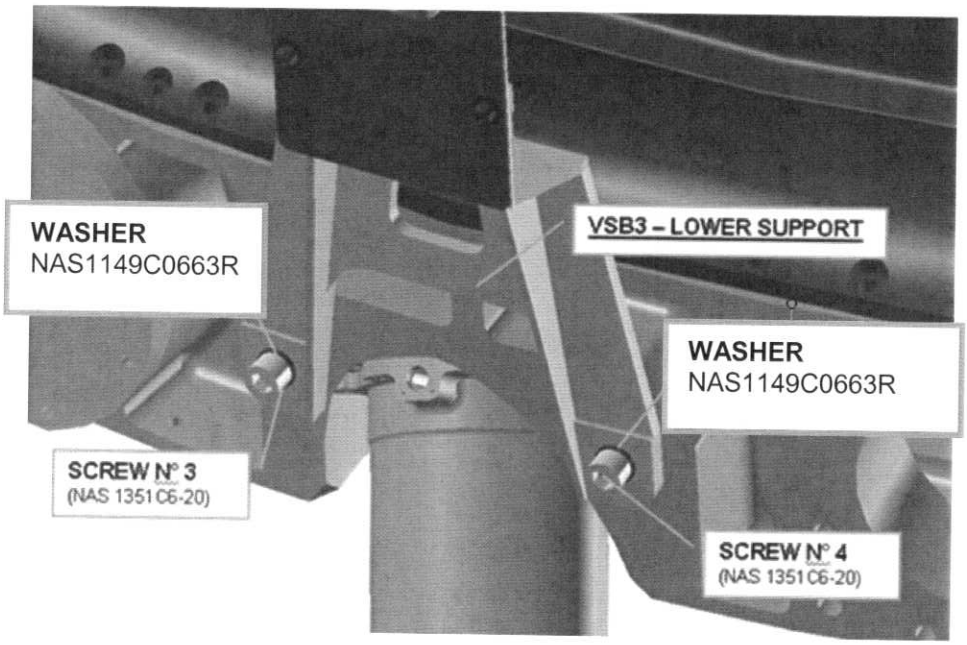

Fig. 3-15: VSB 3 interfaces

3.2.2 VERTICAL SUPPORT BEAM TO TTCS TUBES INTERFACES

Only the VSB 1 and the VSB 2 have interfaces with the TTCS tubes. The interfaces are equal for each of the two VSB assy. The tubes are clamped by using four "KETRON PEEK" Internal Supports inside the Channel. A typical Internal Support with the interface points with the TTCS tubes is shown in figure 3.16.

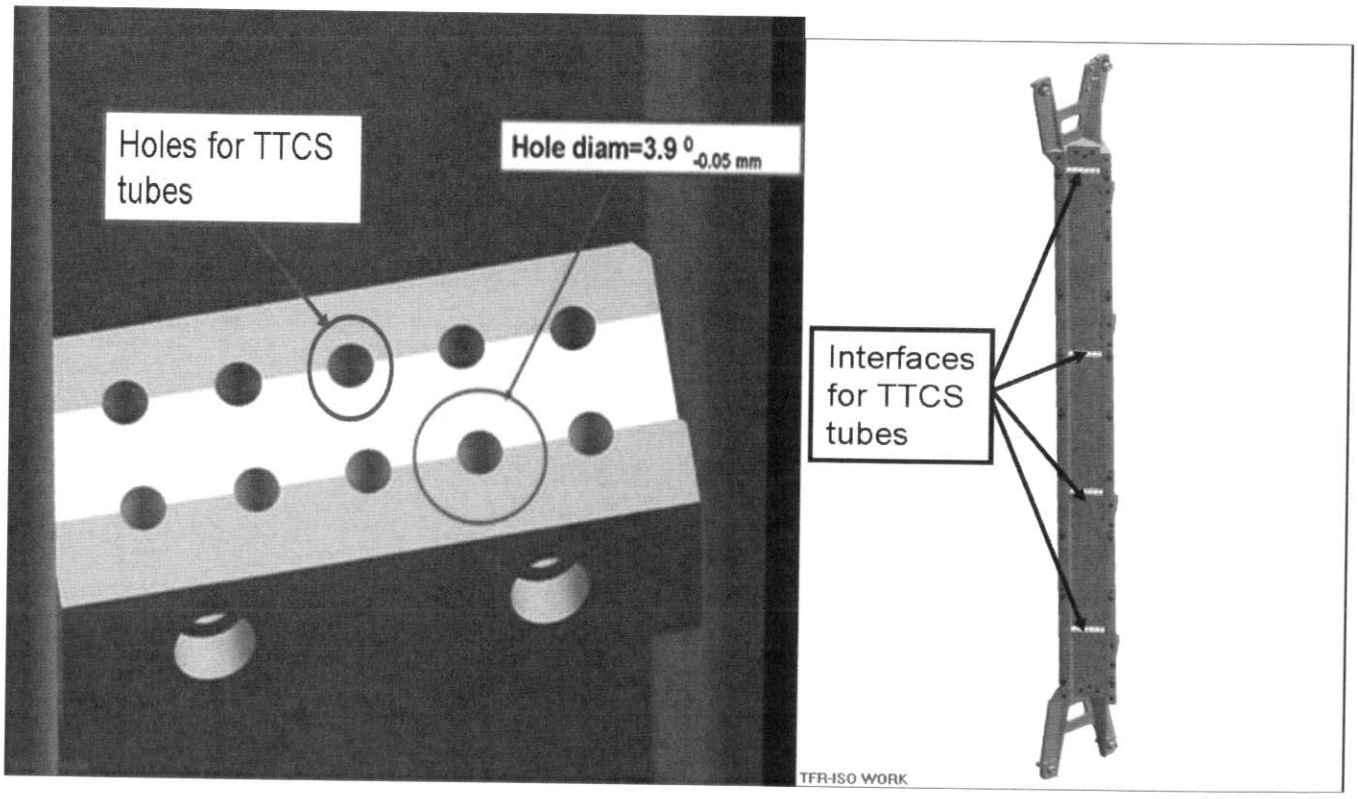

Fig. 3-16: Interfaces with TTCS tubes

Questo documento contiene informazioni di proprietà di CARLO GAVAZZI SPACE SpA: Tutti i diritti sono riservati
All information contained in this document are property of CARLO GAVAZZI SPACE SpA. All right reserved.

3.2.3 VERTICAL SUPPORT BEAM TO CRYOMAGNETICS TUBES INTERFACES

The CryoMagnetics tubes to be supported by the Vertical Support Beams are located only at the WAKE-PORT side, therefore only the VSB 1 has interfaces for these tubes. These interfaces are four "KETRON PEEK" "Lateral Brackets" and are described in the following figure 3.17:

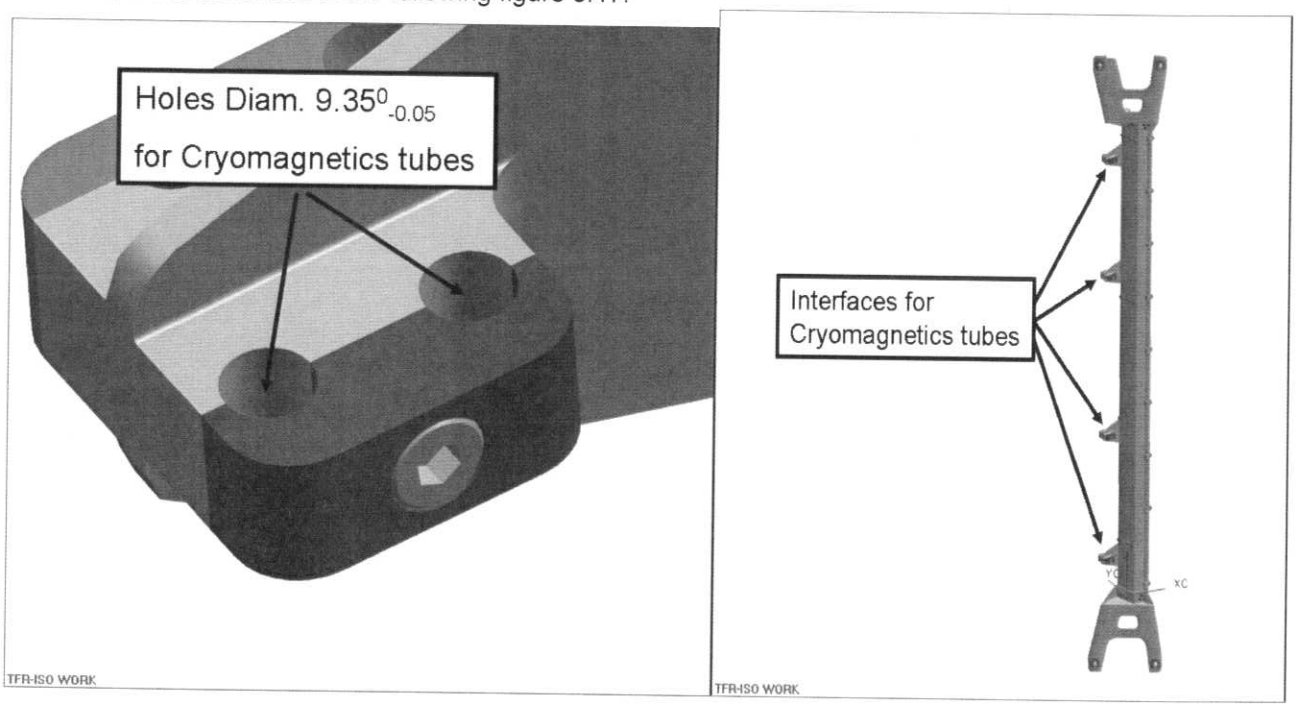

Fig. 3-17: Interfaces with Cryomagnetics tubes

3.2.4 VERTICAL SUPPORT BEAM TO CRYO LHP TRANSPORT LINES INTERFACES

The Cryo LHP are supported by the VSB 1 and VSB 3 only. The interfaces with these two assemblies are described in the next paragraphs.

3.2.4.1 VSB 1 / CRYO LHP TRANSPORT LINES INTERFACES

The Cryo LHP Transport Lines are supported by four "KETRON PEEK" "Lateral Brackets" located in the positions described in the next figure.
The CRYO LHP Transport Lines have not the same diameter, in particular two tubes have a diameter of 4 mm and two other tubes have instead a diameter of 3 mm. Therefore the "Lateral Brackets" have been provided with hole of 4.6 and 3.6 mm, being the exceeding dimension to be filled with "CHOTHERM". The interfaces are described in the next figure:

Questo documento contiene informazioni di proprietà di CARLO GAVAZZI SPACE SpA: Tutti i diritti sono riservati
All information contained in this document are property of CARLO GAVAZZI SPACE SpA. All right reserved.

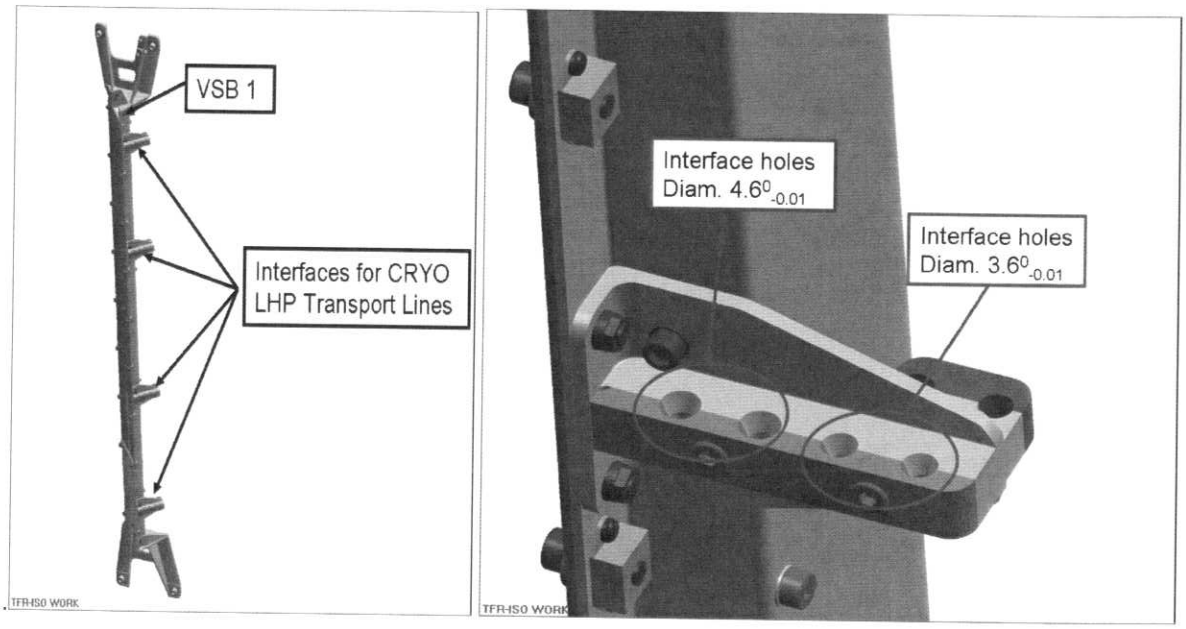

Fig. 3-18: VSB1 Interfaces with Cryo LHP Transport Lines

3.2.4.2 VSB 3 / CRYO LHP TRANSPORT LINES INTERFACES

The Cryo LHP Transport Lines are supported by four "KETRON PEEK" "Frontal Brackets" located in the positions described in the next figure.
The CRYO LHP Transport Lines have not the same diameter, in particular two tubes have a diameter of 4 mm and two other tubes have instead a diameter of 3 mm. Therefore the "Frontal Brackets" have been provided with hole of 4.6 and 3.6 mm, being the exceeding dimension to be filled with "CHOTHERM".

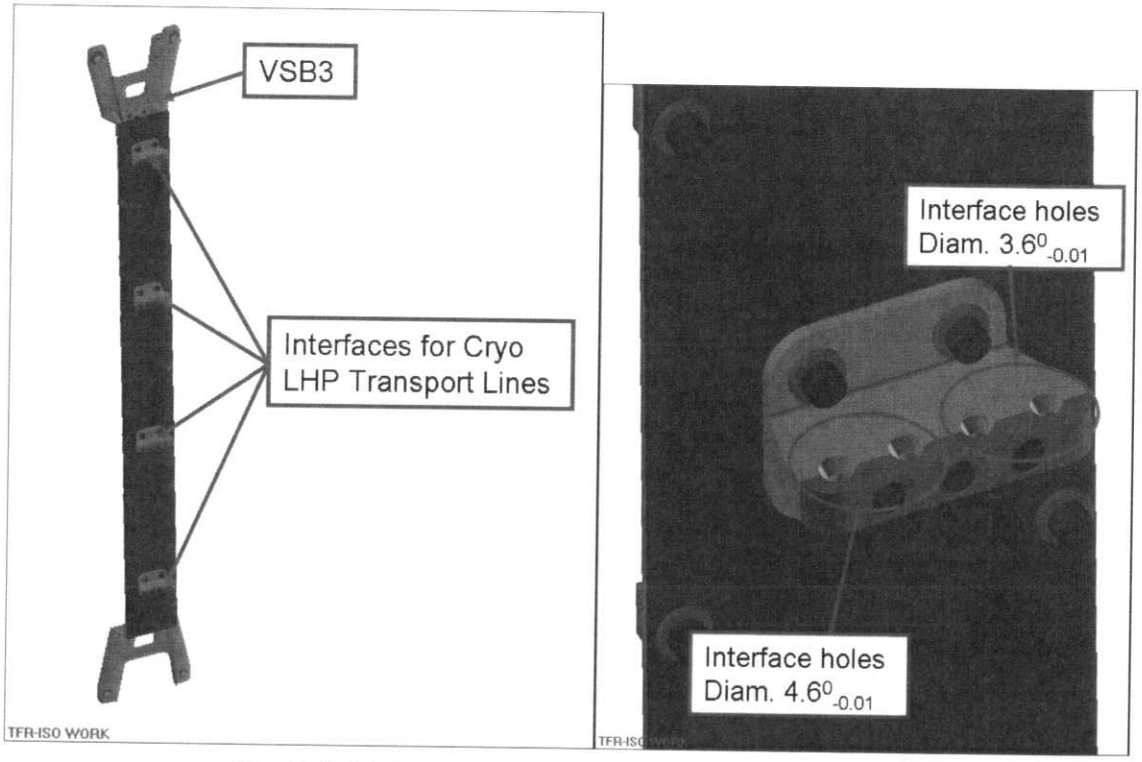

Fig. 3-19: VSB3 Interfaces with Cryo LHP Transport Lines

Questo documento contiene informazioni di proprietà di CARLO GAVAZZI SPACE SpA: Tutti i diritti sono riservati
All information contained in this document are property of CARLO GAVAZZI SPACE SpA. All right reserved.

3.2.5 VERTICAL SUPPORT BEAMS INTERFACES TO TTCS WIRES

The VSB 1 and VSB 2 have been provided with slots in order to fasten the wires from the TTCS Primary and Secondary boxes. The slots are placed in the covers and their position is the same on the VSB 1 and the VSB 2.

The slots are shown in the figure below.

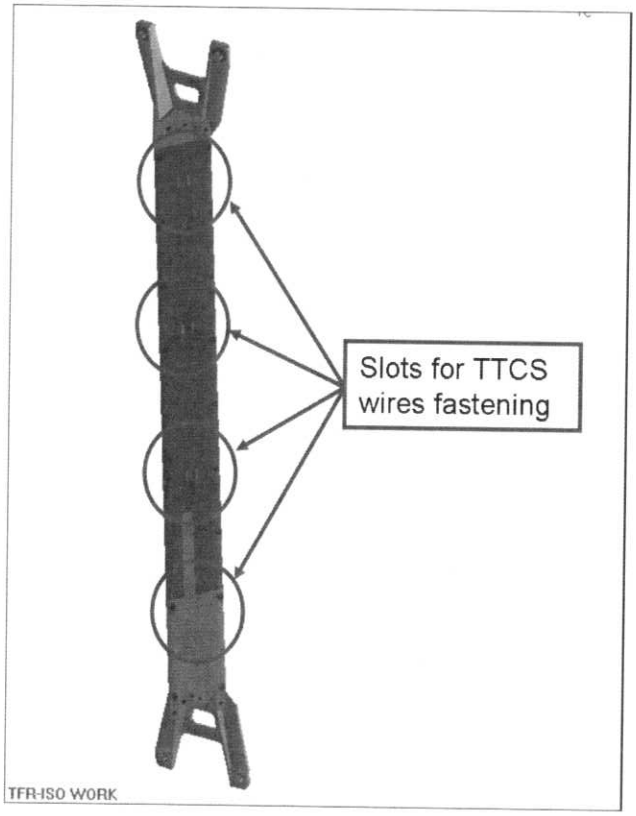

Fig. 3-20: slots for additional TTCS wires fastening

Questo documento contiene informazioni di proprietà di CARLO GAVAZZI SPACE SpA: Tutti i diritti sono riservati
All information contained in this document are property of CARLO GAVAZZI SPACE SpA. All right reserved.

3.3 LHP

LHP are interfacing the 4 cryocoolers in two locations each, at the evaporator saddle.

The interface is at the cryocooler rejection collar, which provides an interface area of about 100x30 mm^2. The LHP evaporator saddle is bolted with 14 screws on it.

Indium foil, 0.005" thick (0.13mm) is in between the two mating surfaces, to enhance thermal contact.

The details of the interface are provided in the following documents:

- [RD5], Thermal Requirements for the Interface between the Cryocooler and the External Thermal Control System
- [RD6], CRYO TCS AND SUPPORT BEAMS DESIGN REPORT, in particular Annex1 (drawings of interfacing elements).

Regarding bolting of these items, please refer to the installation procedure in [RD7]. This document contains the bolts and washers type, and the mounting torque information.

With reference to this installation procedure, please note that 2 bolts per each cryocooler (see Fig. 3-15, typical of all 8 interfaces) need to be changed in order to allow the mounting of the plate hosting the evaporator thermostats. With that regard, the bolts to be used in the two locations are:

Bolt: NAS0068-A040020 M4x0.7x24
Washer: DIN2093 dia 4mm

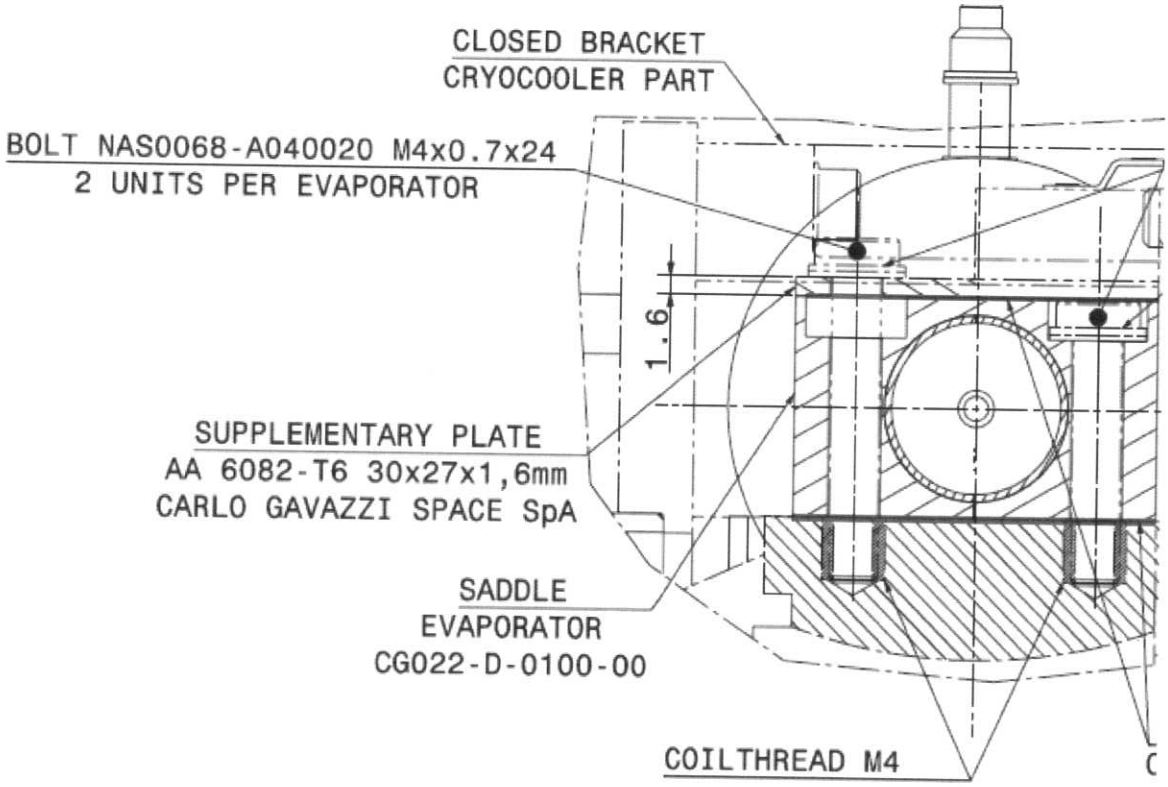

Fig. 3-14: Evaporator bolts

Questo documento contiene informazioni di proprietà di CARLO GAVAZZI SPACE SpA: Tutti i diritti sono riservati
All information contained in this document are property of CARLO GAVAZZI SPACE SpA. All right reserved.

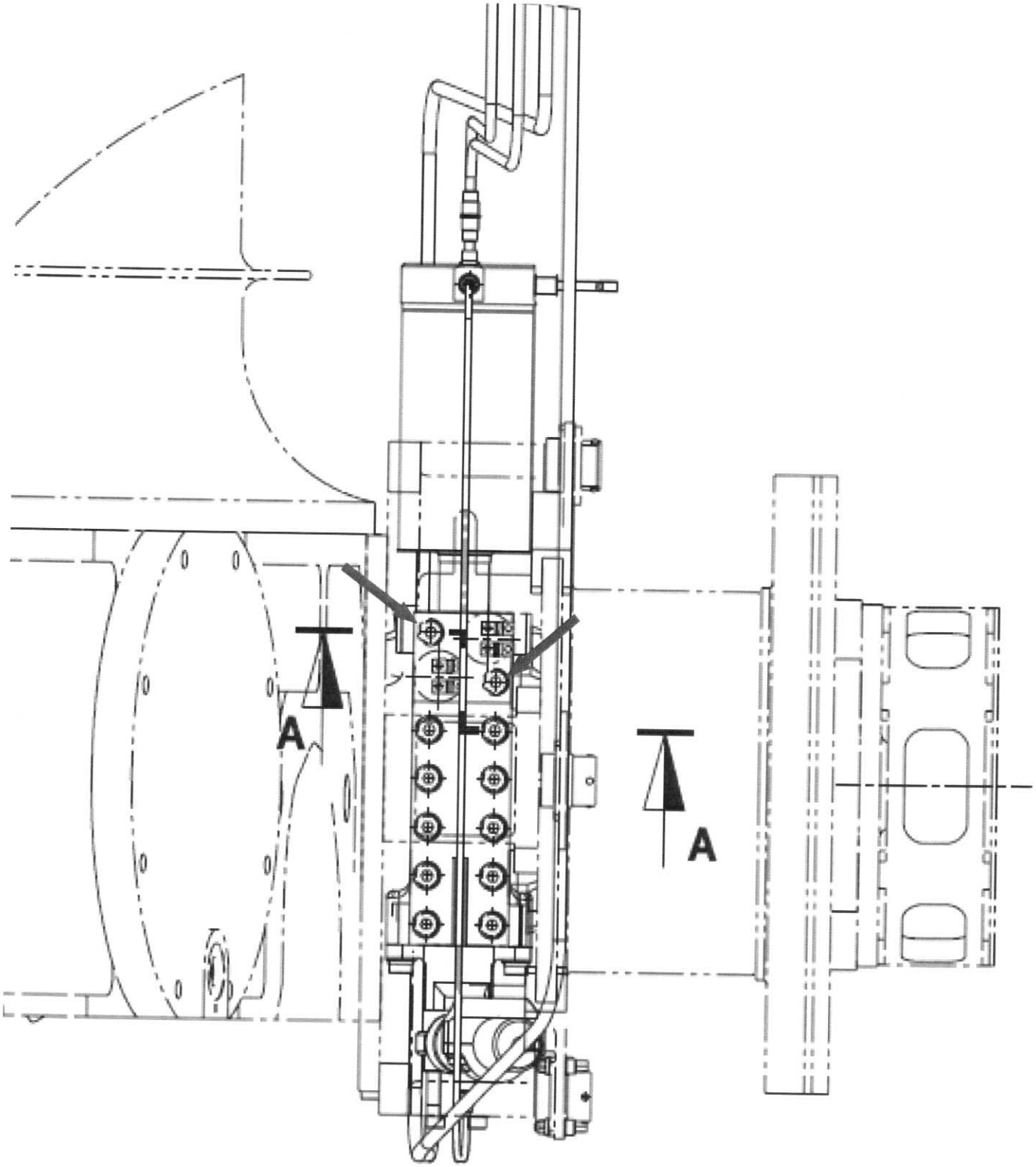

Fig. 3-15: Long Evaporator bolts highlighted by arrows

Questo documento contiene informazioni di proprietà di CARLO GAVAZZI SPACE SpA: Tutti i diritti sono riservati
All information contained in this document are property of CARLO GAVAZZI SPACE SpA. All right reserved.

4. THERMAL INTERFACES

4.1 ZENITH RADIATOR

The Zenith radiator is thermally decoupled from the TRD by means of:

1. Low conductance spokes (14 per radiator quadrant) , whose conductance is lower than 1.2E-4 W/K each
2. MLI, with an effective emissivity lower than 0.05.

Heat leak through the spokes is lower than 1W per radiator quadrant.
Heat leak through the MLI is characterized in the Thermal analysis report [RD8].

Cryocooler heat shall be rejected to deep space through the outer radiator skin, covered with silver Teflon tape, 5 mil., not embossed, perforated (see [RD6]).
The radiator optical properties are summarized below:

Area (per quadrant): 1.19m^2
Emissivity: 0.78 (BOL), 0.75 (EOL)
Absorptivity: 0.08 (BOL), 0.13 (EOL)

4.2 SUPPORT BEAMS

Support beams do not represent a thermal interface for the magnet, since no remarkable heat flows at the interfaces, and these elements are passive.

Support beams heat exchange with LHP transport lines is minimized by the use of KETRON PEEK support brackets. Heat exchange of VSB with other elements (piping and similar) is negligible.

4.3 LHP

LHP are thermally coupled to the Cryocooler rejection collar.
The interface is enhanced by the use of indium foil, which provides an interface conductance of 5.5W/K per each of the two interfaces of each cryocooler. See also [RD5] for details.

Questo documento contiene informazioni di proprietà di CARLO GAVAZZI SPACE SpA: Tutti i diritti sono riservati
All information contained in this document are property of CARLO GAVAZZI SPACE SpA. All right reserved.

5. ELECTRICAL INTERFACES

5.1 ZENITH RADIATOR

PT1000 sensors, located on the zenith radiator, provide 12 contacts per each radiator quadrant. Sensors wires are routed up to the cryocooler body, where a connector bracket is provided (by the same cryocooler structure). From the cryocooler body to the readout electronics box (the CCEB) the routing shall be in charge of the CCEB responsibles (ETH).

The interface points between the TCS group and the CCEB group will be the single 15-contact micro-D connector mounted on the bracket on each cryocooler – total of four connectors. The connector is type MIL-DTL-83513/04 Micro-D Connectors, Metal Shell Crimp, Pre-Wired, AWG 26, socket, 15 contacts, 18 inches irradiated Tefzel wires, Electronless nickel (Glenair P/N: M83513/04 B11N)

Questo documento contiene informazioni di proprietà di CARLO GAVAZZI SPACE SpA: Tutti i diritti sono riservati
All information contained in this document are property of CARLO GAVAZZI SPACE SpA. All right reserved.

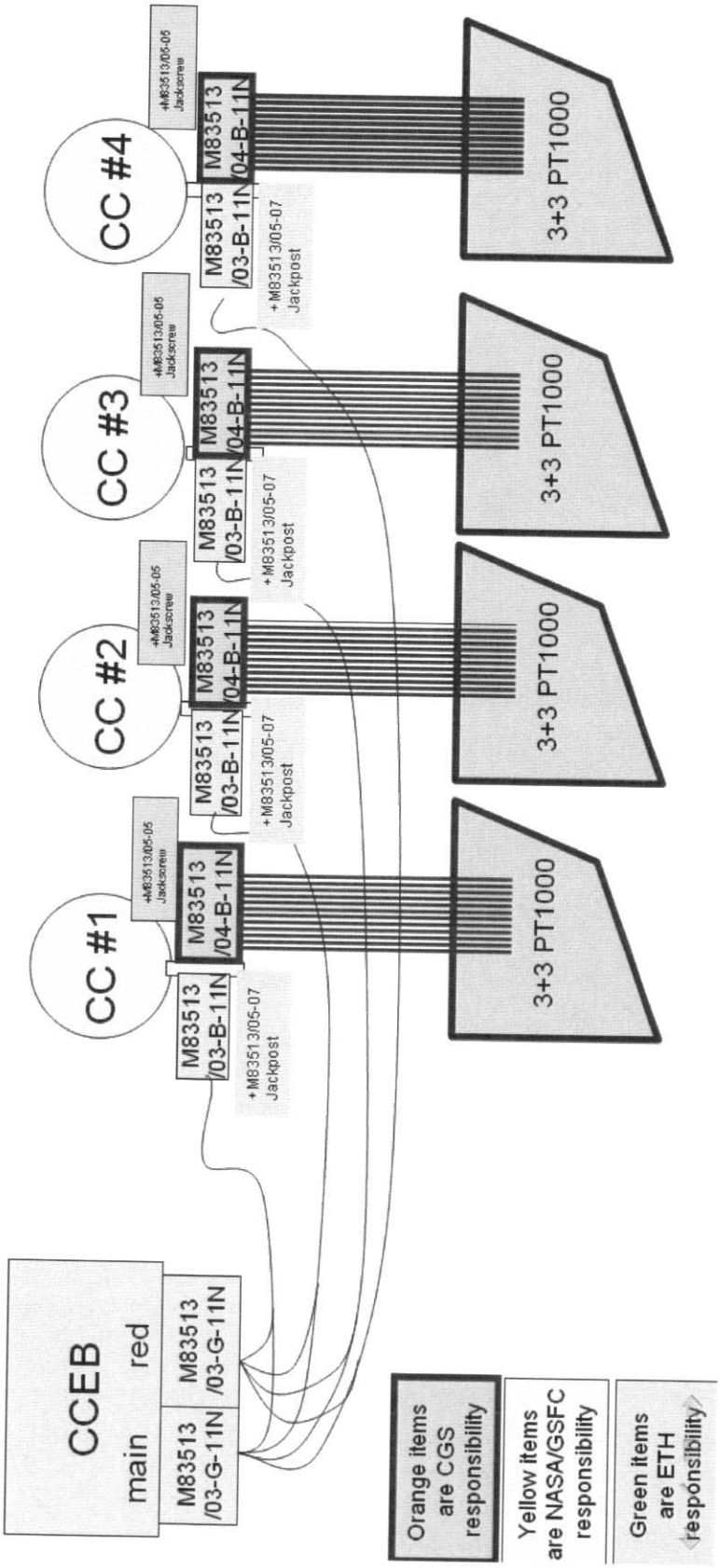

Fig. 5-1: Connectors layout

Questo documento contiene informazioni di proprietà di CARLO GAVAZZI SPACE SpA: Tutti i diritti sono riservati
All information contained in this document are property of CARLO GAVAZZI SPACE SpA. All right reserved.

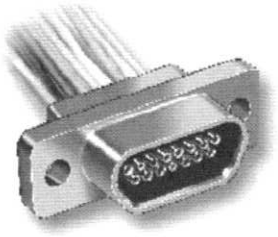

Micro-D Pre-Wired Pigtails — These connectors feature gold-plated TwistPin contacts and mil spec crimp termination. Specify aluminum shells for best availability. 100% tested and backpotted, ready for use.

Choose the Wire Type To Fit Your Application — For lightest weight and smallest diameter, select M22759/33 space grade insulated wire.

HOW TO ORDER METAL SHELL PRE-WIRED CRIMP MIL-DTL-83513 MICRO-D CONNECTORS

Base Part Number	Slash Number	Shell Size	Wire Type	Shell Finish
M83513	/03 Pin Connector (Plug) /04 Socket Connector (Receptacle)	A B C D E F G H Codes A - H specify the shell size. The number of contacts is shown below for reference. A – 9 B – 15 C – 21 D – 25 E – 31 F – 37 G – 51 H – 100	**M22759/11-26 Teflon®-Insulated Hookup Wire** 01 – 18 Inches (457mm), White 02 – 36 Inches (914mm), White 03 – 18 Inches (457mm), 10 Color Repeating 04 – 36 Inches (914mm), 10 Color Repeating 13 – 72 Inches (1829mm), White 14 – 72 Inches (1829mm), 10 Color Repeating **M22759/33-26 Irradiated Tefzel® Insulated Hookup Wire** 09 – 18 Inches (457mm), White 10 – 36 Inches (914mm), White 11 – 18 Inches (457mm), 10 Color Repeating 12 – 36 Inches (914mm), 10 Color Repeating 15 – 72 Inches (1829mm), White 16 – 72 Inches (1829mm), 10 Color Repeating **Single Strand Uninsulated Wire** 05 – .500 Inch (12.7mm), Gold Plated 06 – 1.000 Inch (25.4mm), Gold Plated 07 – .500 Inch (12.7mm), Tin-Lead Plated(2) 08 – 1.000 Inch (25.4mm), Tin-Lead Plated(2)	C – Cadmium N – Electroless Nickel P – Passivated SST

Fig. 5-2: Glenair M83513 connector

ETH is responsible for mounting its connector on bracket on cryo. CGS will arrive with a cable and mating connector.

On the TCS side there will be 2 wires (+,- also know as 1,2) twisted togther going up to the PT1000 mounted on the zenith radiators. Total wire length for all 12+12 PT1000 to be within +/- 1.000m (including differences on the radiator and vertically beside the vacuum case

Questo documento contiene informazioni di proprietà di CARLO GAVAZZI SPACE SpA: Tutti i diritti sono riservati
All information contained in this document are property of CARLO GAVAZZI SPACE SpA. All right reserved.

The pinout of the 15-contact connector is equal for the 4 cryocoolers, and is:

Contact	Description (PT1000 lead)		
	Sensor #	Bus (main/red)	+/-
1	#0 "-0" +		
2	#1 "-0" +		
3	#2 "-0" +		
4	N/C – cut short		
5	N/C – cut short		
6	#0 "-1" +		
7	#1 "-1" +		
8	#2 "-1" +		
9	#0 "-0" –		
10	#1 "-0" –		
11	#2 "-0" –		
12	N/C – cut short		
13	#0 "-1" –		
14	#1 "-1" –		
15	#2 "-1" –		

Tab. 5-1: PT1000 connectors pin function

where #0, #1 and #2 refer to the three measurement points and "-0" (often called "Main") and "-1" (Red.) refer to the eventual destination boards of these wires in the CCEB.

5.2 SUPPORT BEAMS

N.A.

5.3 LHP

LHP heaters and thermostats are connected to a connector bracket provided by the cryocooler structure.
A total of 8 wires – conventionally called: (A/B)x(+/–)x(L/R), where A or B is the PDS bus, and L and R indicate the Left or Right evaporator heater block – is connected to a circular connector on the cryocooler bracket. All wires shall be AWG22. The cryocooler bracket (provided by NASA/GSFC) will host a connector type MS27508E10F35PA, 13contacts for AWG 22D, pin (male connector), shell size 10.

Questo documento contiene informazioni di proprietà di CARLO GAVAZZI SPACE SpA: Tutti i diritti sono riservati
All information contained in this document are property of CARLO GAVAZZI SPACE SpA. All right reserved.

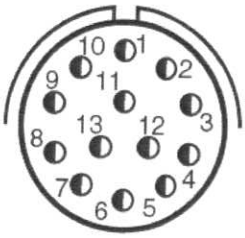

MIL-C-38999 Series II Connectors

KJ

Box Mounting Receptacle (Back Panel)

MS27508E
(MS service class E)

KJ5E

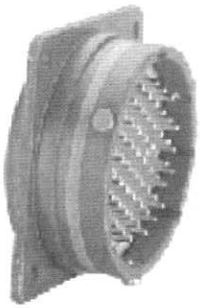

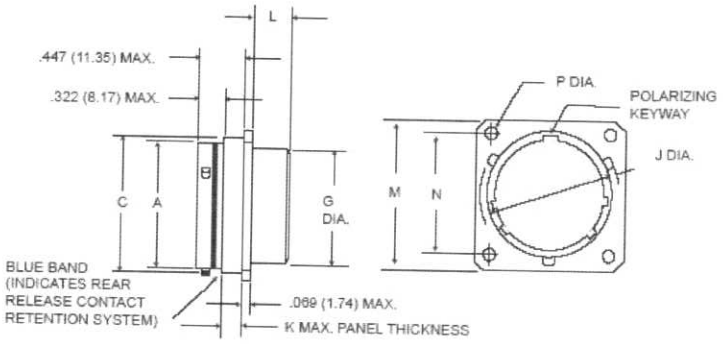

NOTE: This connector does not accommodate backshells

Shell Size	A Dia. Max.	C Dia. Max.	G Dia. Max.	J Dia. Max.	K Max.	L Max.	M Max.	N T.P	P +.005 (0.13) -.010 (0.25)
8	.474 (12.04)	.522 (13.26)	.421 (10.69)	.563 (14.30)	.147 (3.73)	.185 (4.70)	.828 (21.03)	.594 (15.09)	.125 (3.18)
10	.591 (15.01)	.639 (16.23)	.542 (13.77)	.680 (17.27)	.152 (3.86)	.185 (4.70)	.954 (24.23)	.719 (18.26)	.125 (3.18)

Fig. 5-3: Heaters circular connector

The Pin Function is the following:

Contact	Description
1	Not Connected
2	A + R
3	A + L
4	B + R
5	B + L
6	Not Connected
7	B – L
8	B – R
9	A – L
10	A – R
11	Not Connected
12	Not Connected
13	Not Connected

Tab. 5-2: Heaters connectors pin function

The mating connector shall be provided by the AMS Collaboration.

Questo documento contiene informazioni di proprietà di CARLO GAVAZZI SPACE SpA: Tutti i diritti sono riservati
All information contained in this document are property of CARLO GAVAZZI SPACE SpA. All right reserved.