ORIGINALE ARCHIVIO

CARLO GAVAZZI

CARLO GAVAZZI SPACE SpA

AMS02 - TCS

Tipo Doc.: *Doc.Type:*	TECHNICAL NOTE			N° DRD: *DRD N°:*	DEL 071
N° Doc.: *Doc. N°:*	**AMSTCS-TN-CGS-010**	Ediz.: *Issue:* **1**	Data: *Date:* **31/03/2008**	Pagina *Page* **1**	Di *Of* **24**
Titolo: *Title:*	CAB TCS DESIGN REPORT				

	Nome & Funzione *Name & Function*	Firma *Signature*	Data *Date*
Preparato da: *Prepared by:*	A Franzoso (DT/MT)		31/03/2008
Approvato da: *Approved by:*	M Molina (DT/MT)		31/3/2008
	C Vettore (DT/MT)		31/3/2008
	L Cremonesi (PA/QA)	L. Cremonesi	31.03.08
	C Cinquepalmi (PA/CC)	C. Cinquepalmi	31.03.08
Applicazione autorizzata da: *Application authorized by:*	M Olivier (PM)	M. Olivier	31/03/08
Customer / Higher Level Contractor			
Accettato da: *Accepted by:*			
Approvato da: *Approved by:*			

LISTA DI DISTRIBUZIONE *DISTRIBUTION LIST*	N	A	I
Interna / *Internal*			
Esterna / *External*			
E. Russo (ASI)			x

N=Numero di copie A=Applicazione I=Informazione
N=Number of copy A=Application I=Information

Gestione documenti: *Data Management*	Firma / *Signature*	Data / *Date* 31/03/08
File: AMSTCS-TN-CGS-010 Issue 1 doc		

Questo documento contiene informazioni di proprietà di CARLO GAVAZZI SPACE SpA: Tutti i diritti sono riservati
All information contained in this document are property of CARLO GAVAZZI SPACE SpA. All right reserved

REGISTRAZIONE DELLE MODIFICHE / *CHANGE RECORD*

EDIZIONE *ISSUE*	DATA *DATE*	AUTORIZZAZIONE *CHANGE AUTHORITY*	OGGETTO DELLA MODIFICA E SEZIONI AFFETTE *REASON FOR CHANGE AND AFFECTED SECTIONS*
1	31/03/2008		First Issue

Questo documento contiene informazioni di proprietà di CARLO GAVAZZI SPACE SpA: Tutti i diritti sono riservati
All information contained in this document are property of CARLO GAVAZZI SPACE SpA. All right reserved.

LISTA DELLE PAGINE VALIDE / *LIST OF VALID PAGES*

PAGINA *PAGE*	EDIZIONE *ISSUE*	PAGINA *PAGE*	EDIZIONE *ISSUE*	PAGINA *PAGE*	EDIZIONE *ISSUE*	PAGINA *PAGE*	EDIZIONE *ISSUE*	PAGINA *PAGE*	EDIZIONE *ISSUE*
1 - 24	1								
Annex 1 p. 1-31	1								

Questo documento contiene informazioni di proprietà di CARLO GAVAZZI SPACE SpA: Tutti i diritti sono riservati
All information contained in this document are property of CARLO GAVAZZI SPACE SpA. All right reserved.

TABLE OF CONTENT

1. SCOPE 6

2. APPLICABLE AND REFERENCE DOCUMENTS 6

2.1 APPLICABLE DOCUMENTS 6
2.2 REFERENCE DOCUMENTS 7

3. ACRONYMS 8

4. CAB THERMAL CONTROL SYSTEM 9

4.1 OVERVIEW AND COMPONENTS IDENTIFICATION 9
4.2 LHP 12
4.2.1 EVAPORATOR 12
4.2.2 COMPENSATION CHAMBER 12
4.2.3 BYPASS VALVE 13
4.2.4 TRANSPORT LINES 13
4.2.5 CONDENSERS SADDLE 13
4.3 LHP STARTUP HEATERS 14
4.4 CAB HEATERS AND THERMOSTATS 16
4.5 MLI 18
4.6 CAB RADIATOR TAPE 18
4.7 CAB HEAT PIPES 20
4.8 USS HEAT PIPES 21
4.9 CAB TO USS FILLER 23

ANNEX 1. CAB LHP DESIGN DESCRIPTION AND DRAWINGS 24

Questo documento contiene informazioni di proprietà di CARLO GAVAZZI SPACE SpA: Tutti i diritti sono riservati
All information contained in this document are property of CARLO GAVAZZI SPACE SpA. All right reserved

LIST OF TABLES

Tab. 4-1: CAB switch ON heater patches description 16

LIST OF FIGURES

Fig. 4-1: Schematics of the CAB TCS. MLI not included 9
Fig. 4-2: CAB TCS main elements 11
Fig. 4-3: CAB Evaporator zone CAD view. At left, CC and valves (red), at right the evaporators. The red circles highlight the heaters fin 12
Fig. 4-4: CAB Condenser line view, with detail of condenser saddles; in red circles, the rivets provisions 14
Fig. 4-5: Heater schematics for the 2 LHP of CAB 15
Fig. 4-6: Schematics of the CAB switch-on heaters 16
Fig. 4-7 Holes positions (3 inserts of M5x10) 17
Fig. 4-8: CAB tape-covered surfaces, highlighted in red 18
Fig. 4-9: CAB tape-covered surfaces, highlighted in red 19
Fig. 4-10: CAB Heat Pipes 20
Fig. 4-11: AGHP-8 mechanical dimensions 20
Fig. 4-12: Heat Pipes hole pattern 21
Fig. 4-13: CAB hole pattern for heat pipes accommodation 21
Fig. 4-14: USS Heat Pipes 22
Fig. 4-15: CAB/USS Heat Pipes dimensions 22
Fig. 4-16: CAB/USS Heat Pipes layout 22
Fig. 4-17: CAB/USS Heat Pipes dimensions (cross section) 23

Questo documento contiene informazioni di proprietà di CARLO GAVAZZI SPACE SpA: Tutti i diritti sono riservati
All information contained in this document are property of CARLO GAVAZZI SPACE SpA. All right reserved.

1. SCOPE

This document provides the design description of the AMS CAB Thermal Control System (TCS), including all the hardware not directly installed on the CAB, which participates to its dissipated heat rejection.

This document corresponds to contract deliverable DEL 071.

2. APPLICABLE AND REFERENCE DOCUMENTS

Documents here below identified are applicable and/or reference for the activities described in the present document and are considered part of it to the extent specified herein.

2.1 APPLICABLE DOCUMENTS

CONTRACTUAL

AD1 Capitolato generale ASI, available on http://www.asi.it/html/norme/cap_gen.pdf

AD2 Richiesta d'offerta per Programma AMS, attività di Fase C/D – Prot. ASI 006194 – 25/07/2007

AD2bis CapitolatoTecnico "Progetto: AMS Attività di fase C/D" Doc. N. DC-IPC-2007-062

AD3 Tailoring di primo livello delle norme ECSS, serie M-E-Q – Progetto AMS attività di fase C/D- Doc. n° DC-IPC-2007-063 Rev. A

MANAGEMENT

AD4 "ECSS Glossary" – Doc. ECSS-P-001 Rev. B

PRODUCT ASSURANCE

AD5 "Product Assurance Requirements - Progetto AMS attività di fase C/D "-Doc. n° DC-IPC-2007-064 Rev. A

AD6 "Istruzione Operativa "Norme per la redazione del Piano di Assicurazione del Prodotto (PA Plan)", Doc. OP-IPC-2005-008

AD7 "Sistemi di Gestione per la Qualità", doc. UNI EN ISO 9001:2000

AD8 "Quality Management Plan for the Alpha Magnetic Spectrometer 02 (AMS-02) Experiment", Doc. JSC63164, Basic Version, 09/21/2005

AD9 "Master Verification Plan (MVP)", Doc JSC 29788, Iss. Draft, 8/21/2006

Questo documento contiene informazioni di proprietà di CARLO GAVAZZI SPACE SpA: Tutti i diritti sono riservati
All information contained in this document are property of CARLO GAVAZZI SPACE SpA. All right reserved.

AD10 "PA REQUIREMENTS DC-IPC-2007-064 RevA Conformity",doc AMSCD-RQ-CGS-001 issue 1

ENGINEERING AND TECHNICAL

AD11 "Multi-Layer Insulation for the Alpha Magnetic Spectrometer Guidelines", Doc. CTSD-SH-1782, 9/30/2005

AD12 "AMS-02 Structural Verification Plan for the Space Transportation System and the International Space Station", Doc. JSC28792, Iss.D, March 2005

AD13 "Experiment/Payload Integration Hardware Interfaces - Part I", Doc. JSC29095, Iss.A, 06/01/2002

AD14 "Experiment/Payload Integration Hardware Interfaces - Part II", Doc. JSC29095, Iss.A, August 2004

AD15 "Experiment/Vacuum Case Payload Integration Hardware Interface", Doc. JSC29202, Iss.C, March 2005

AD16 "AMS-02 thermal requirements specification document ", Doc. AMSTCS-SP-CGS-003, Iss.1, 25/03/2008

AD17 "Attached Payload Interface Requirements Document , Doc. SSP 57003, Iss. B, 17/06/03

AD18 "Attached Payload Hardware Interface Control Document, Doc. SSP 57004, Iss. B, 13/06/03

AD19 "AMSPDS-RP-CGS-001", Doc. PDS Design Description, Iss.2, July 05

AD20 "AmsE-PPL", AMS Electronics Preferred Parts List, available on (http://ams.cern.ch/AMS/Electronics/Parts/), Iss.1, Nov 01 configured on doc PDS-LI-CGS-006 iss 1

2.2 REFERENCE DOCUMENTS

[RD 1] Phase II Flight Safety Data Package for the Alpha Magnetic Spectrometer - 02 (AMS-02) Version Basic JSC49978 , 2006

[RD 2] Alpha Magnetic Spectrometer – 02 Assembly and Testing Integration Plan, Version A, JSC63123, 28-11-2005

[RD 3] Dichiarazione INFN sulla consegna di componenti – lettera del 20 maggio 2007 (prot. ASI n. 0009869)

[RD 4] *Capitolato gestionale ASI OP-IPC-2005-010-E*

[RD 5] AMSTCS-TN-CGS-009, *CAB TCS thermal analysis report*, 31/03/2007, issue 1

[RD 6] AMSTCS-IC-CGS-001, *CAB TCS ICD*, 31/03/2007, issue 1

[RD 7] AMSTCS-TN-CGS-014, *AMS02 MLI description report*, 31/03/2007, issue 1

Questo documento contiene informazioni di proprietà di CARLO GAVAZZI SPACE SpA: Tutti i diritti sono riservati
All information contained in this document are property of CARLO GAVAZZI SPACE SpA All right reserved.

3. ACRONYMS

AD	Applicable Document
CAB	Criomagnet Avionics Box
ID	Inner Diameter
LHP	Loop Heat Pipe
MLI	Multi Layer Insulation
OD	Outer Diameter
RD	Reference Document
TCS	Thermal Control System
USS-02	Unique Support Structure 02
VDC	Volt, Direct Current

Questo documento contiene informazioni di proprietà di CARLO GAVAZZI SPACE SpA: Tutti i diritti sono riservati
All information contained in this document are property of CARLO GAVAZZI SPACE SpA. All right reserved

4. CAB THERMAL CONTROL SYSTEM

4.1 OVERVIEW AND COMPONENTS IDENTIFICATION

The CAB is an electronics box mounted on the USS-02 upper trunnion, close to the wake radiator.
CAB is built and installed under the responsibility of CRISA (ES).

Heat dissipated by the CAB during its nominal phases (constant heat) and during th Ramp-Up processes (where the power dissipation in increased by a large amount (more that 600W – see AD16 for details) is rejected to the environment by three means:

1. A LHP system, with a couple of LHP devices which are sunk to the wake radiator
2. Direct radiation to space through radiation-deserved surfaces identified on the CAB box outer walls
3. Conduction towards its mechanical interface, the USS02.

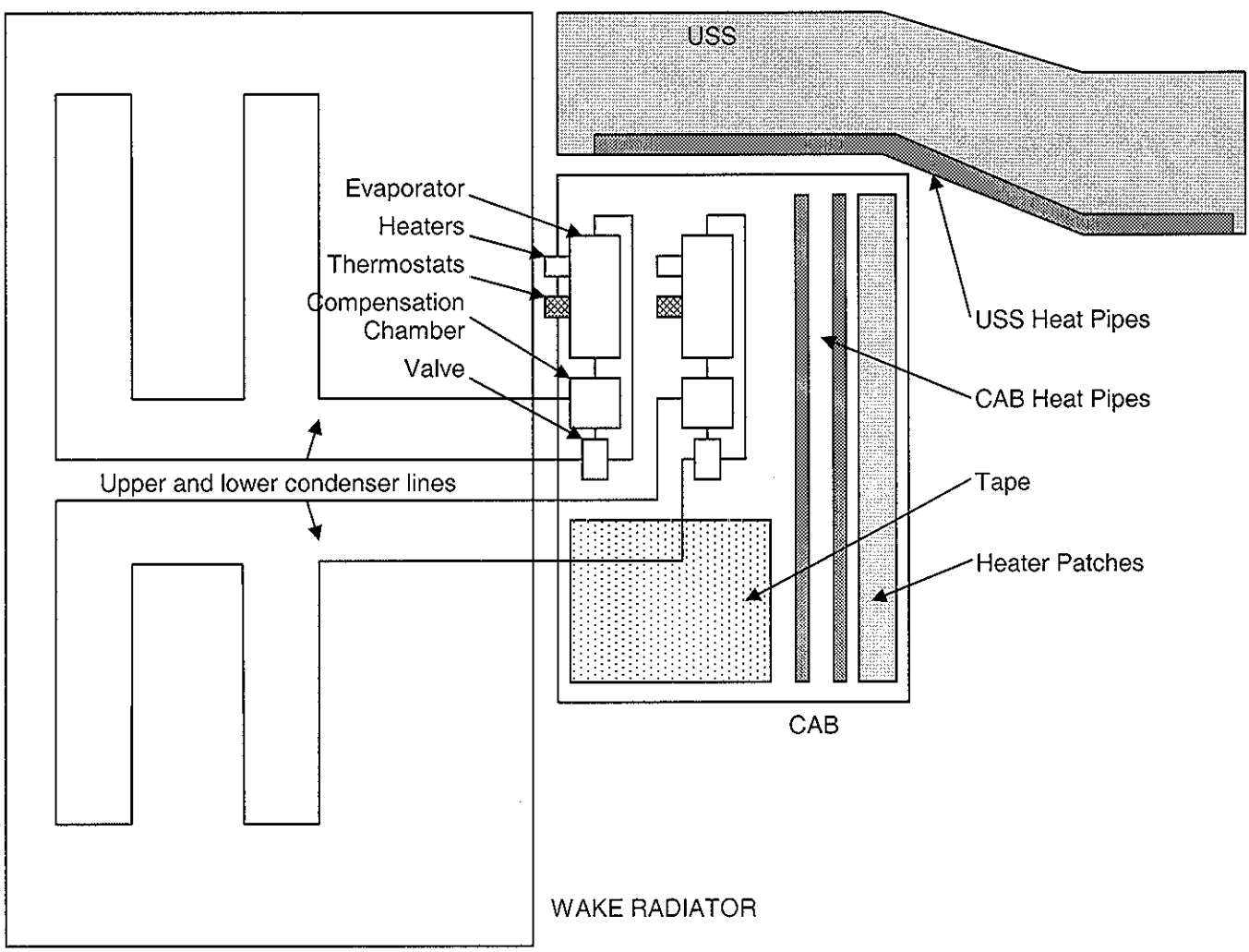

Fig. 4-1: Schematics of the CAB TCS. MLI not included

The way the heat is transferred from the CAB to the main WAKE radiator is through a pair of Loop Heat Pipes (LHP) LHP are among the most efficient ways to transfer large amounts of heat at distant points; the heat to be rejected causes the evaporation of a working fluid inside a porous wick (made of nickel) on the evaporator

Questo documento contiene informazioni di proprietà di CARLO GAVAZZI SPACE SpA: Tutti i diritti sono riservati
All information contained in this document are property of CARLO GAVAZZI SPACE SpA. All right reserved.

component. The fluid is pushed by capillary forces through a fluidic loop towards a condensing zone (the radiator). After the fluid has condensed, the liquid is conveyed back to the evaporator, passing through the compensation chamber (whose task is to regulate the loop performance under different environmental conditions). The working fluid selected for the AMS-02 CAB TCS is ammonia, since there are no freezing risks and the heat transport efficiency is high. To prevent the LHP from bringing the CAB temperature below its operational range in the case the radiator gets too cold (unpowered scenario), a temperature passively-actuated valve (located on the vapour line) is able to redirect the vapours to the Compensation Chamber, thus bypassing the condenser zone and keeping the CAB warm.

Each LHP is independent from the other, and individually is able to manage the nominal power dissipation of the CAB.

The fluidic transport lines (both the vapour line coming from the evaporator/valve and the liquid line redirecting the fluid to the compensation chamber of the LHP) are made of steel, like the compensation chamber and the jacket of the evaporator. Even the condenser lines running onto the evaporator are made of steel, but the thermal contact to the radiator skin is mediated by an aluminium saddle which is glued and riveted onto the WAKE radiator.

The LHP are also equipped with startup heaters in order to allow the controlled start of the loop circulation. Heaters are placed on each evaporator body, on a dedicated fin; each fin hosts a main and a redundant line.

The CAB preferred radiator is composed of the CAB wake-facing side, and is obtained covering by tape its surface, although all available CAB surfaces are covered with silver Teflon tape, to maximize heat rejection.

Two Heat Pipes run along the CAB to homogenize its temperatures.

On the CAB surface a set of heaters and thermostats are mounted, to bring the CAB at its minimum switch-on temperature and to protect it in the non operational phases.

Finally, on the USS three heat pipes are mounted, to allow more efficient heat rejection in the ramp-up phases by joining poorly coupled USS elements, when the CAB large power amount is delivered to the USS interface, which needs to be cooled on its turn to allow proper CAB functioning.

All these items are treated in more detail in the following sections.

Questo documento contiene informazioni di proprietà di CARLO GAVAZZI SPACE SpA: Tutti i diritti sono riservati
All information contained in this document are property of CARLO GAVAZZI SPACE SpA All right reserved

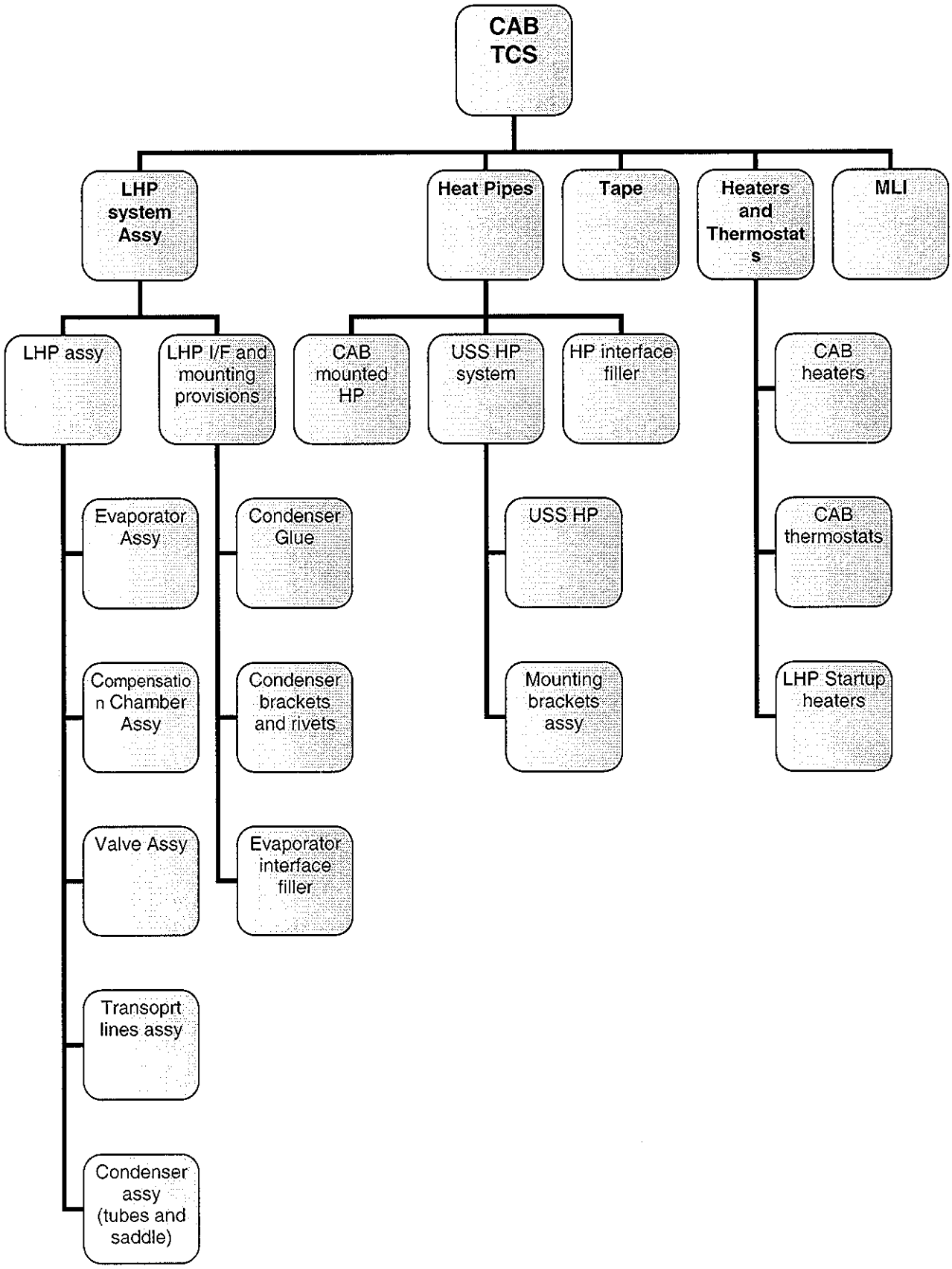

Fig 4-2 CAB TCS main elements

Questo documento contiene informazioni di proprietà di CARLO GAVAZZI SPACE SpA: Tutti i diritti sono riservati
All information contained in this document are property of CARLO GAVAZZI SPACE SpA. All right reserved.

4.2 LHP

2 different LHP assemblies are provided. Some elements are common to both (evaporator, valve, bypass line, compensation chamber) while the transport lines length and routing, and is different in the two cases The working fluid is ammonia.

The LHP design description and the drawings are reported in Annex 1. In the following sections few integrating information is given.

4.2.1 EVAPORATOR

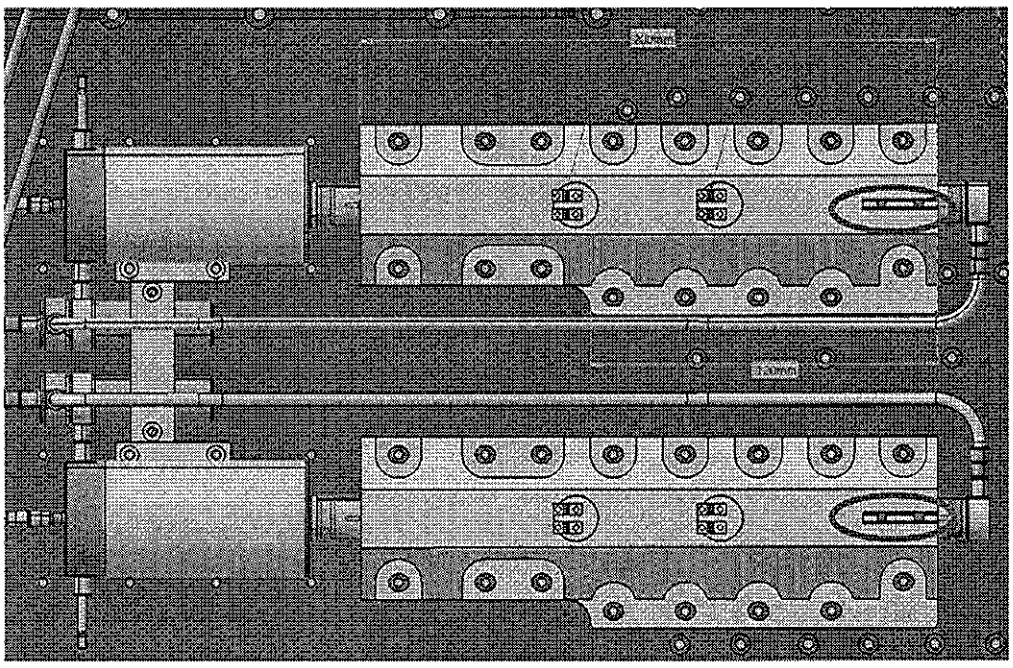

Fig. 4-3: CAB Evaporator zone CAD view. At left, CC and valves (red), at right the evaporators. The red circles highlight the heaters fin.

The evaporator saddle (see also the interface control document [RD6]) is bolted with 16 M3 bolts onto the CAB interface, and the interface conductance is enhanced by an Chotherm 1671 foil supplied by CGS. The Chotherm foil shall have the same footprint of the evaporator saddle, the nominal thickness of the Chotherm foils (0.38mm), and cutouts in correspondence of the bolts.

The bolts torque and the interfaces are reported in the CAB ICD, see [RD6] A total of 16 bolts are used to secure the evaporator saddle to the CAB plate.

The evaporator saddle hosts a fin (26x27mm2, available flat surface is 26x26 mm2) to allow the mounting of the startup heaters.

See also Annex 1.

4.2.2 COMPENSATION CHAMBER

See relevant design description in annex 1.

Questo documento contiene informazioni di proprietà di CARLO GAVAZZI SPACE SpA: Tutti i diritti sono riservati
All information contained in this document are property of CARLO GAVAZZI SPACE SpA All right reserved

4.2.3 BYPASS VALVE

The bypass valve has the task to redirect the vapor coming from the evaporator back to the compensation chamber whenever the vapor temperature is higher than a pre-defined setpoint. It is divided into two compartments, separated by a bellow.

The working principle is the differential pressure generated by the ammonia on one side, and on an Argon reservoir on the other side of the bellow. This differential pressure (which is driven by absolute temperature values of the system) serves to move the valve stem and open or close the circuit branches.

The valve is characterized by a transition temperature range, from the fully open position (all the vapor in the radiator/condenser branch) to the fully closed position (all the vapor to the bypass line, towards the CC). The Argon back pressure, which regulates the set point, is such that the fully closed position is reached at -10°C.

See also Annex 1.

4.2.4 TRANSPORT LINES

Transport lines serve to bring vapor to the radiator and to return the condensed liquid. Transport lines shape and length is different per each single LHP.

Common to all the lines are the material (stainless steel) and diameters: vapor lines are 3mm ID, 4mm OD. Liquid lines are 2mm ID, 3mm OD. The vapor line interfaces with the condenser tube (same diameter, 3mm ID, 4mm OD), while the section change happens at the outlet of the condenser tube, at the interface with the liquid transport line.

See also Annex 1.

4.2.5 CONDENSERS SADDLE

Condenser saddle is composed of 12 straight sections along the steel condensing tube routing (24 segments in total for the 2 condensers).
The saddle has a footprint 12.5mm wide, and a variable length according to each section.

The saddles present a variable number of protrusions (from 1 for the 116 mm 'short' saddles, up to 4 for the 1389.5mm 'longest' saddle) which shall serve for riveting the saddles to the radiator skin.

In addition to the riveting, the saddles shall be glued onto the radiator, with glue.

Questo documento contiene informazioni di proprietà di CARLO GAVAZZI SPACE SpA: Tutti i diritti sono riservati
All information contained in this document are property of CARLO GAVAZZI SPACE SpA. All right reserved.

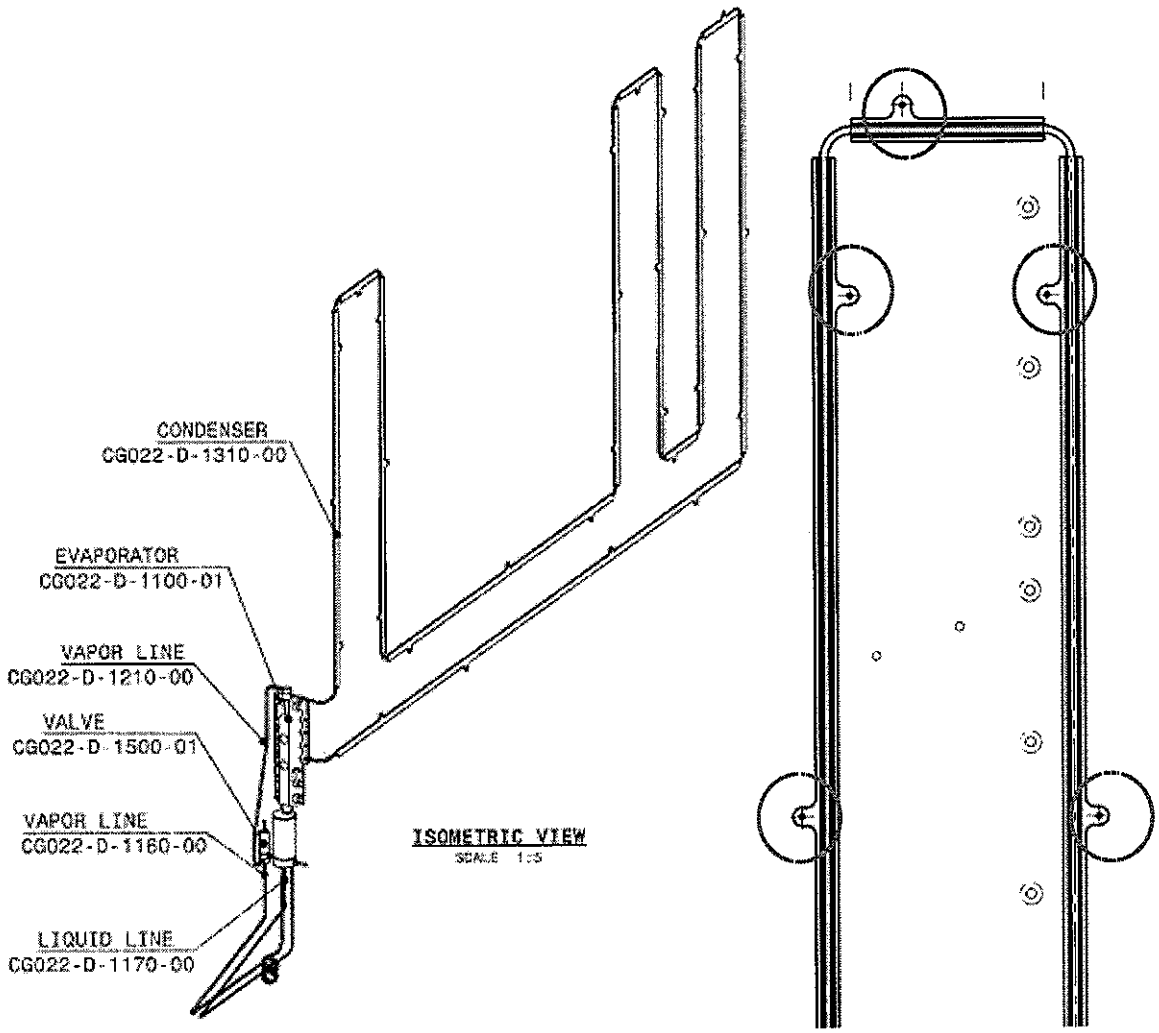

Fig. 4-4: CAB Condenser line view, with detail of condenser saddles; in red circles, the rivets provisions.

See also Annex 1.

4.3 LHP STARTUP HEATERS

Startup heaters shall provide the necessary power density on the evaporator saddle, needed to start the fluid circulation whenever needed.

Startup heaters are mounted on a dedicated fin on the evaporator body, whose available area is 26x26mm2.

Two lines are available, A and B. Lines are independent. Each evaporator has two heater circuits (fed by A and B respectively), no thermostats are present on the lines.

Heater nominal supply voltage: 120 VDC
Heater Maximum supply voltage on ISS: 126.5 VDC
Heater Minimum supply voltage on ISS: 113 VDC

Questo documento contiene informazioni di proprietà di CARLO GAVAZZI SPACE SpA: Tutti i diritti sono riservati
All information contained in this document are property of CARLO GAVAZZI SPACE SpA. All right reserved

Maximum heater power density when film heaters are glued onto a metallic plate: 3W per square inch (0.465 W/cm2) → to be calculated at maximum voltage
Maximum heater power density is not applicable whenever the heaters are mounted with additional mechanical support (e.g., bolted counter brackets)

The amount of the startup heaters is not defined yet, and can be evaluated only with test on the manufactured LHP system. The available fin on the evaporator body allows for 6.3W maximum (heater on both fin sides) at maximum voltage, which corresponds to 5.0W at 113VDC if the film heaters are simply glued.

According to the test results, appropriate heater design and retention methods shall be applied. Heaters shall be (kapton foil / metal wire) and (single / double sided) heaters according to the power density requirements.

The circuit schematic is as follows:

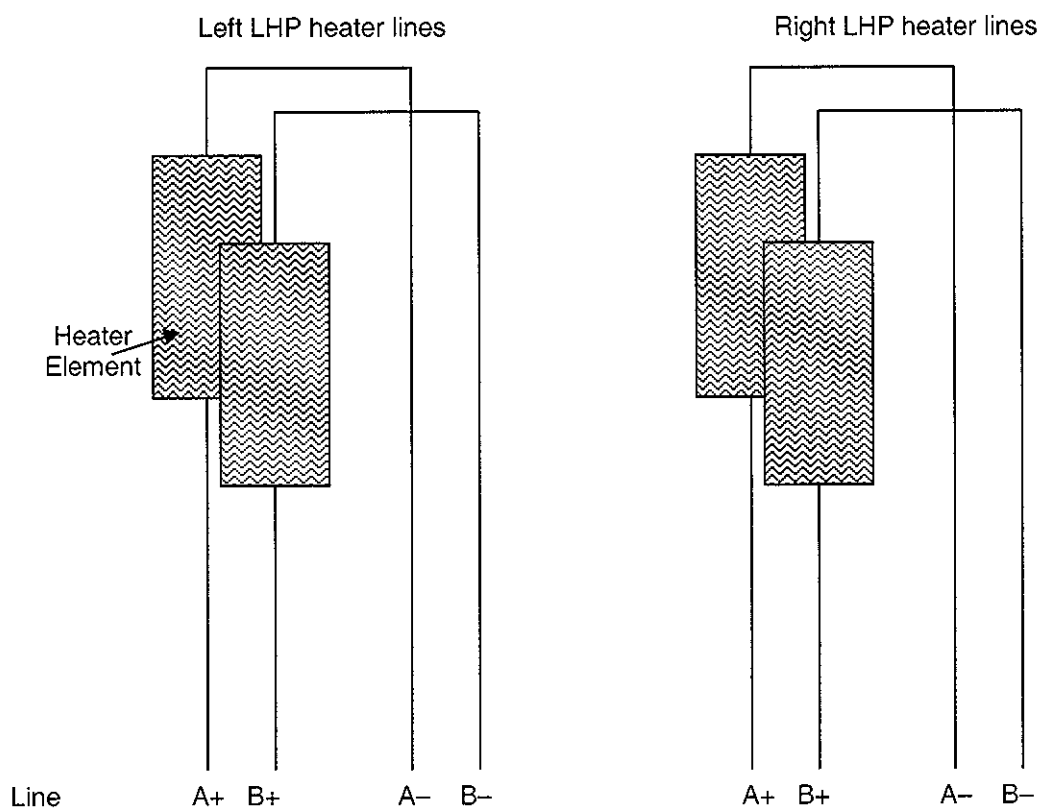

Fig. 4-5: Heater schematics for the 2 LHP of CAB

The 8 heater wires labeled (A/B)x(+/–) in the figure above shall be redirected to two circular connector mounted on a dedicated bracket on the Wake radiator. The connectors are type MS27497E8F35PA 6x22D-p, one for line A, one for line B. Connectors provide 6 contacts, only 4 per connector shall be used.

Heaters wires are AWG22 accordingly.

More information on the connector and electrical interfaces in general is provided in [RD 6]

Questo documento contiene informazioni di proprietà di CARLO GAVAZZI SPACE SpA: Tutti i diritti sono riservati
All information contained in this document are property of CARLO GAVAZZI SPACE SpA All right reserved

4.4 CAB HEATERS AND THERMOSTATS

Heaters are foreseen on the CAB, in order to allow switch on of the unit and to protect it in the non operational phases. Two lines are available, A and B. Each line has a thermostat to prevent overheating of the CAB and to reduce electrical power demand if not needed.

Heater nominal supply voltage: 120 VDC
Heater Maximum supply voltage on ISS: 126.5 VDC
Heater Minimum supply voltage on ISS: 113 VDC

Total heater power sums up to 100W, needed to bring the CAB to the startup temperature in the worst cold case. These 100W are divided into 2 heater patches., called Type1 and Type2.

The heaters patches are double layer kapton foil heaters, where the A and B lines are superimposed on the same footprint. In the following scheme, only the A circuit is shown; the B circuit is perfectly identical (and shares the same heater patches)

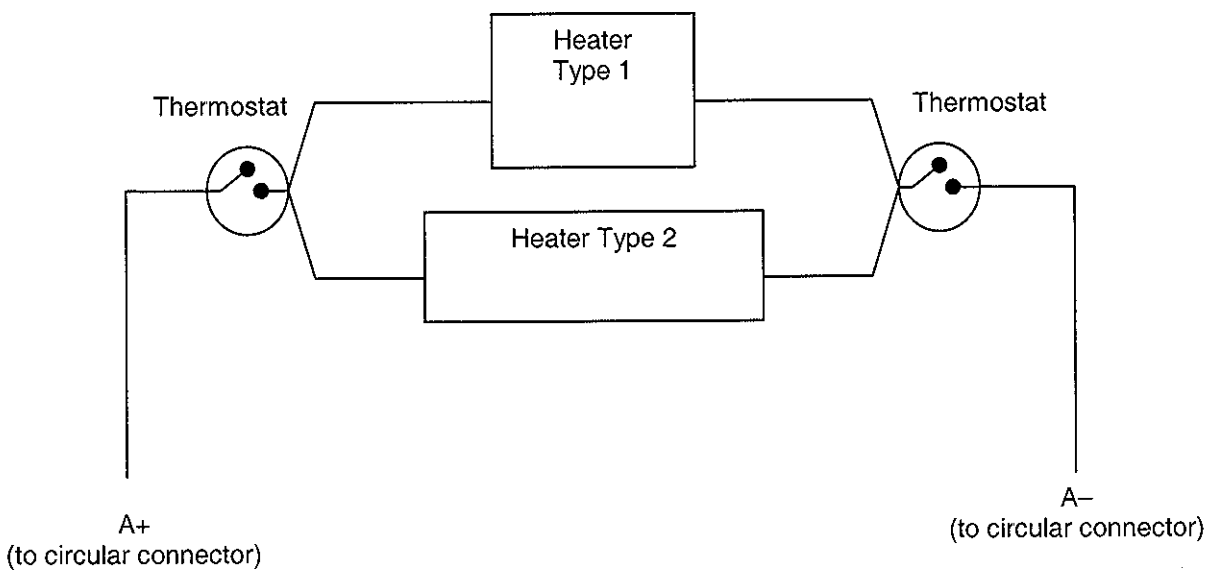

Fig 4-6: Schematics of the CAB switch-on heaters

Heater features are:

Heater Patch	Dimensions (mm^2)	Resistance (Ohm)	Power (W) @120VDC	Power (W) @113VDC	Power (W) @126.5VDC	Max Power density (W/cm^2)	Notes
Type 1	150 x 150	255 + 255	56.5	50.1	62.8	0.359	80cm cables (x4)
Type 2	700 x 25	255 + 255	56.5	50.1	62.8	0.279	80cm cables (x4)

Tab. 4-1: CAB switch ON heater patches description

All the heaters shall have adhesive 3M Y 966 on one side.
All cables shall be Cables ESA/SCC 3901/13 Variant 10 2μ AG AWG 22

Each line is controlled with 2 thermostats in series (4 thermostats in total, for lines A and B).

Lines splitting from thermostat to heaters takes place at the soldering on the thermostat

Questo documento contiene informazioni di proprietà di CARLO GAVAZZI SPACE SpA: Tutti i diritti sono riservati
All information contained in this document are property of CARLO GAVAZZI SPACE SpA. All right reserved

A total of 4 heater wires labeled (A/B)x(+/–) in the figure above shall be redirected to a circular connector on the CAB mounting flange. All wires shall be AWG22. The connector shall be type MS27497E8F35PA 6x22D-p (providing 6 contacts, for AWG22 wires, 4 of them are used).

The following figure present a CAD view of the

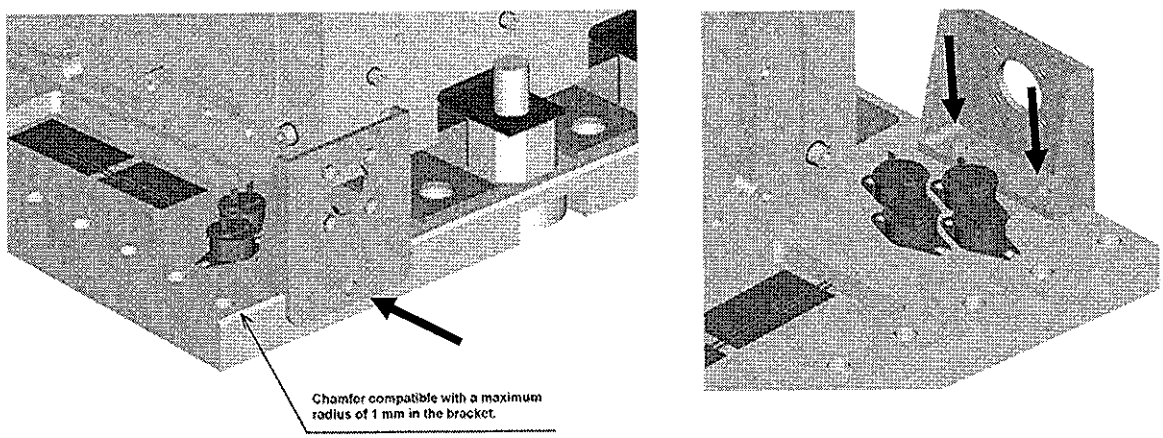

Fig. 4-7 Holes positions (3 inserts of M5x10)

More information on the connector, thermostats mechanical interfaces, and electrical interfaces in general is provided in [RD 6]

Questo documento contiene informazioni di proprietà di CARLO GAVAZZI SPACE SpA: Tutti i diritti sono riservati
All information contained in this document are property of CARLO GAVAZZI SPACE SpA. All right reserved

4.5 MLI

MLI blankets shall cover the upper and lower CAB sides, highlighted below in red.

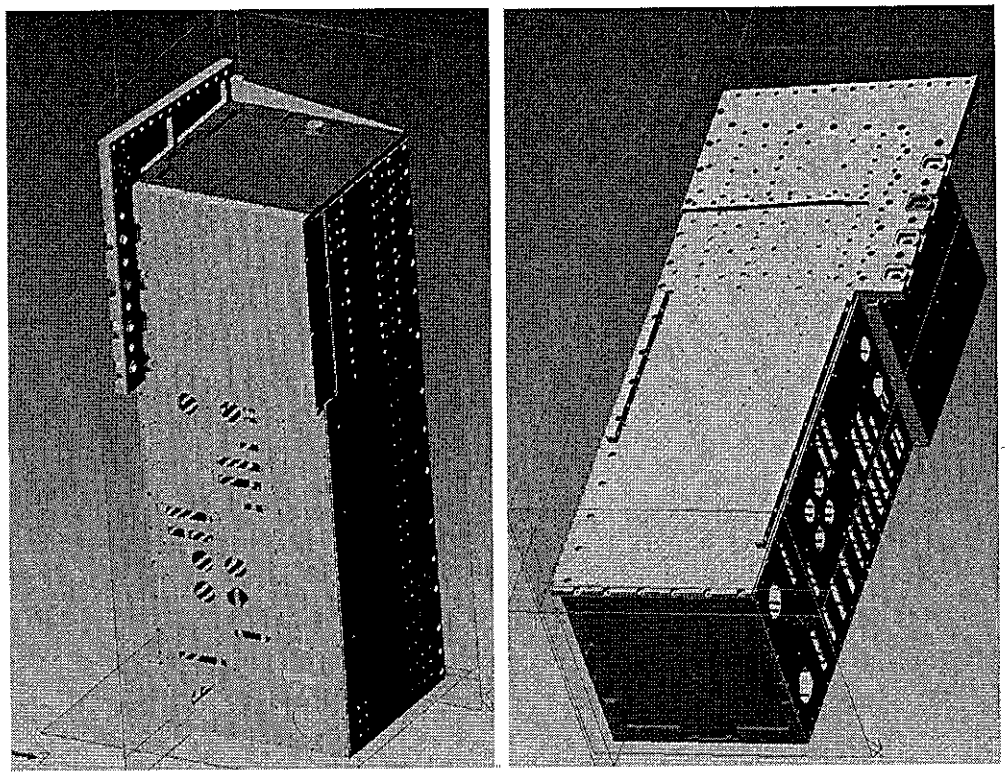

Fig. 4-8: CAB tape-covered surfaces, highlighted in red.

Details on the MLI blankets (layers, grounding) are given in [RD8].

4.6 CAB RADIATOR TAPE

Almost all CAB external faces shall be covered by Silver Teflon Tape, 5 mil., not embossed, perforated.
The Teflon tape shall cover as much surface as possible, with the following restrictions:

1. the tape shall be cut in patches, which shall not exceed a individual surface of 200cm2. Being the tape provided in 2" rolls, each segment shall not exceed 39cm in length.
2. adjacent patches shall be separated in any direction by a distance higher than 1mm (goal) and lower than 3mm.
3. cutouts on the tape shall be provided, in correspondence of inserts, bonding provisions and bolts. A safe distance from these locations, of 2 mm minimum and 10mm maximum, shall be left with respect to the footprint of the aforementioned items.

The Silver Teflon tape to be used is the Sheldhal – adhesive on one side, type 966 – corresponding to the following part number:
P/N 146415-002 (G401905)
Description code: VDM;G4019;CVLY;TEF;5 0 MIL;AG/INC;966;2";108' ROLL

The tape location available area is depicted in the following figures (highlighted in red per each face); tape shall be cut and trimmed in order to avoid venting holes, bolts inserts, heaters, heat pipes, labels, LHP evaporators footprint, mounting and lifting devices attachment points and any other element reserved area. Please note that the figures

Questo documento contiene informazioni di proprietà di CARLO GAVAZZI SPACE SpA: Tutti i diritti sono riservati
All information contained in this document are property of CARLO GAVAZZI SPACE SpA. All right reserved

show the maximum available surface, while the real layout shall be smaller due to all the restrictions mentioned above. Tape shall be provided with a protective layer, to be removed before flight.

Upper and lower surfaces shall not be covered with tape.

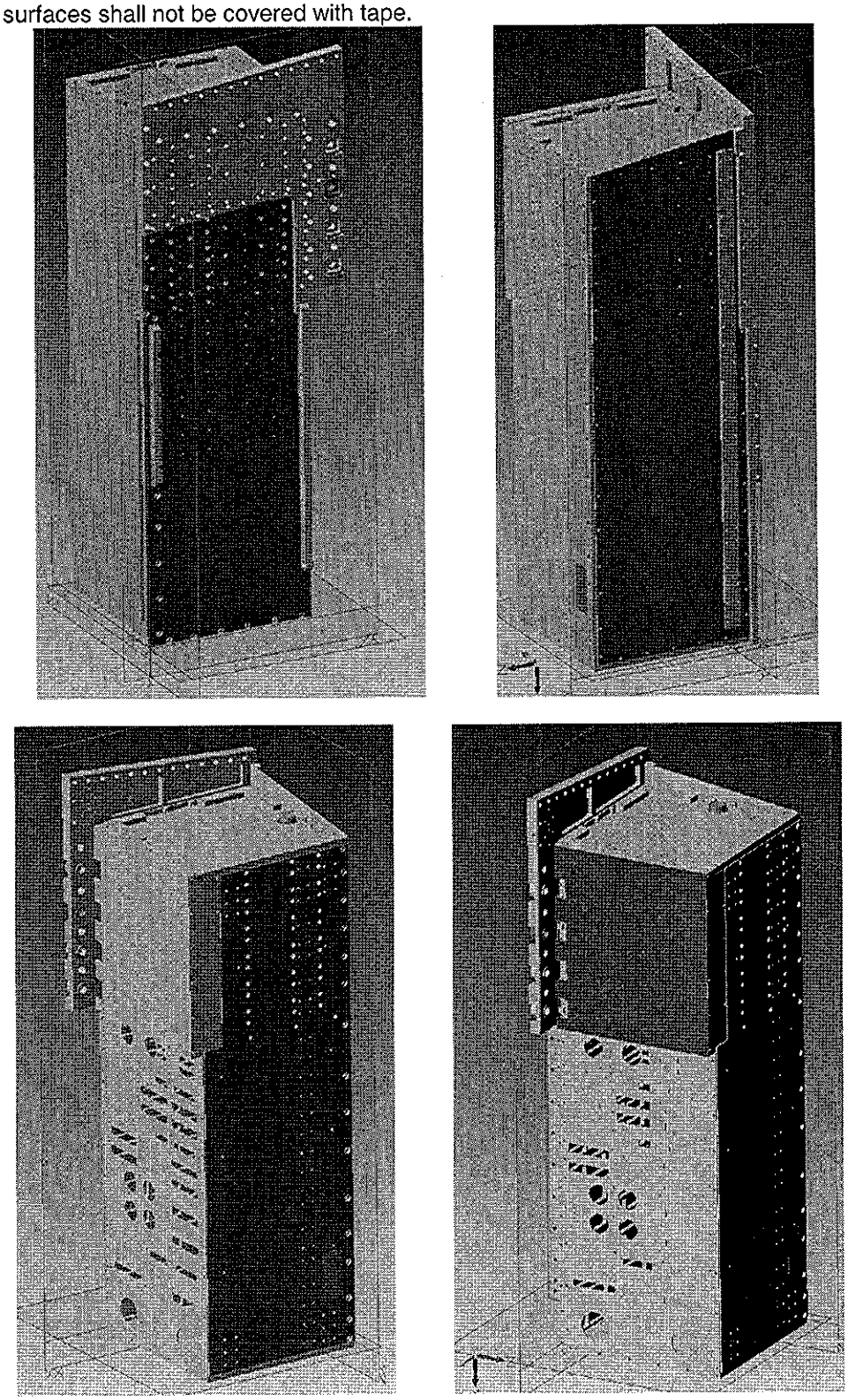

Fig. 4-9: CAB tape-covered surfaces, highlighted in red

Questo documento contiene informazioni di proprietà di CARLO GAVAZZI SPACE SpA: Tutti i diritti sono riservati
All information contained in this document are property of CARLO GAVAZZI SPACE SpA. All right reserved.

4.7 CAB HEAT PIPES

In order to spread the heat all along the CAB case , two heat pipes running on the CAB unit have been implemented: one is mounted on the CAB top side, while the other is located on the rear (WAKE) side

These heat pipes use ammonia as working fluid.

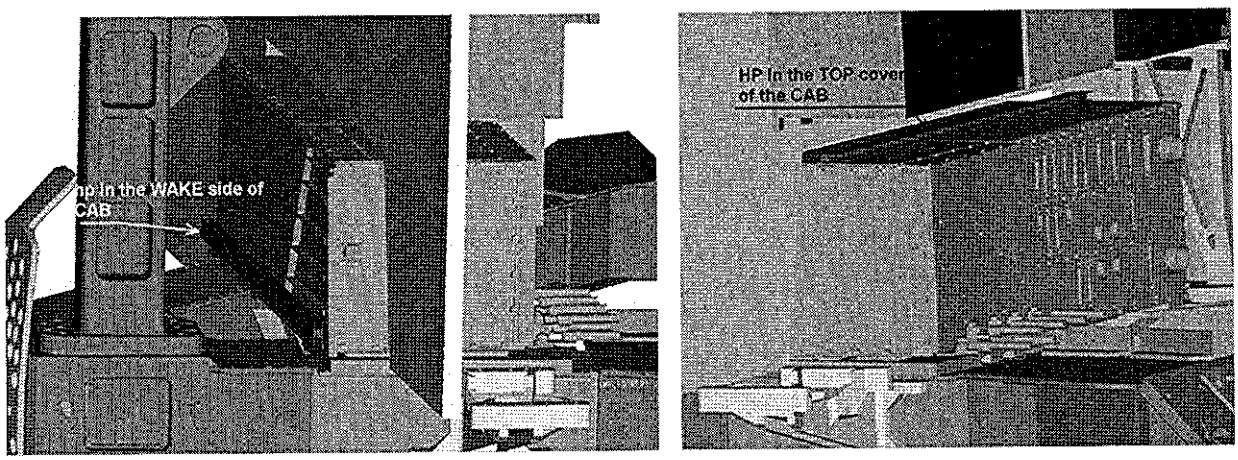

Fig. 4-10: CAB Heat Pipes

The Heat Pipes are AGHP-8 type , 775 mm long, whose cross section parameters are shown in the following picture:

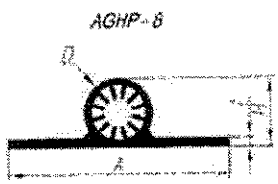

	AGHP-8
A [mm]	26
H [mm]	6.0
B [mm]	-
D [mm]	8.0
H_1 [mm]	-
t [mm]	1.0
t_1 [mm]	
No. of grooves	12
D_1 [mm]	3.2
Mass [kg/m]	0.13

Fig. 4-11: AGHP-8 mechanical dimensions

In the following figure the bolt pattern for the straight HPs on the CAB's rear plate is presented The same bolt pattern has been used for the top plate. More information is provided in the ICD [RD 6]

Questo documento contiene informazioni di proprietà di CARLO GAVAZZI SPACE SpA: Tutti i diritti sono riservati
All information contained in this document are property of CARLO GAVAZZI SPACE SpA. All right reserved

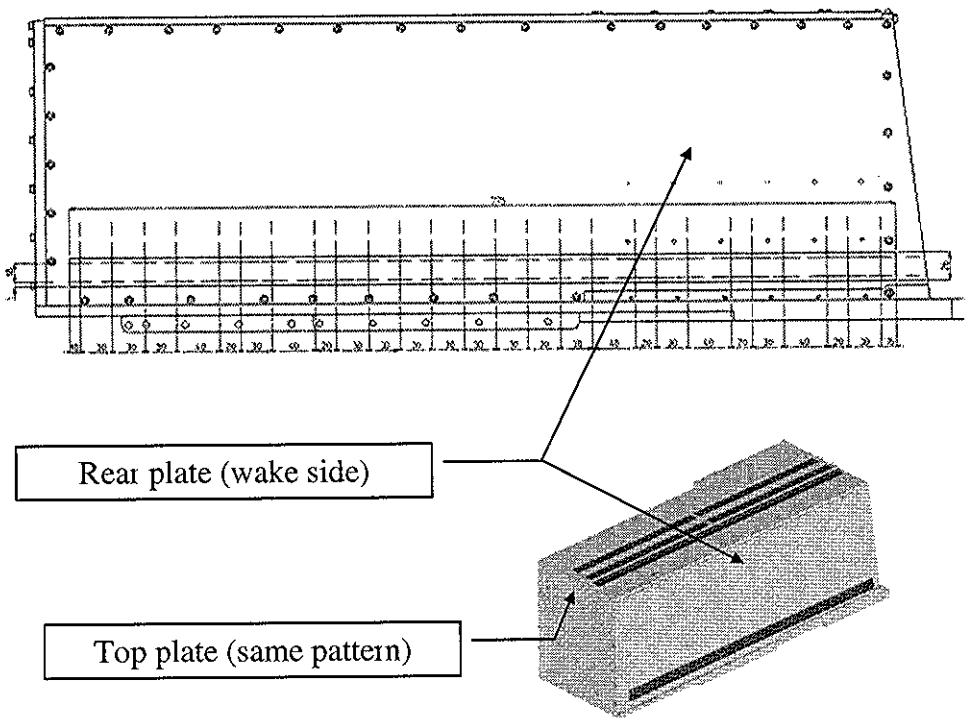

Fig. 4-12: Heat Pipes hole pattern

On the CAB side , the mechanical design foresees 52 inserts of M3x4.5. The inserts are not evenly spaced as the next picture shows.

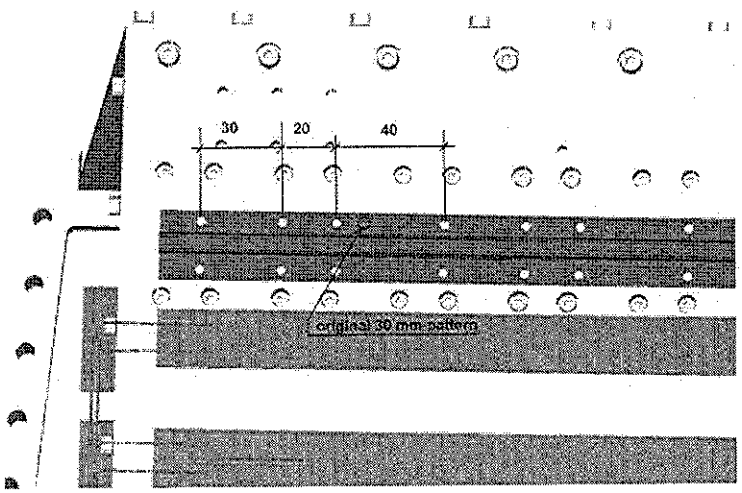

Fig 4-13: CAB hole pattern for heat pipes accommodation

4.8 USS HEAT PIPES

Part of the CAB dissipation will be rejected to the USS, which serves as additional heat sink. In order to optimize the heat sink performance three 14 mm diameter heat pipes are mounted across adjacent USS parts (connecting the USS02 Upper Trunnion Bridge to the Upper Vacuum Case I/F joint), to increase conductance between these parts

These heat pipes are custom-built and need to be folded in order to follow the USS profile

Questo documento contiene informazioni di proprietà di CARLO GAVAZZI SPACE SpA: Tutti i diritti sono riservati
All information contained in this document are property of CARLO GAVAZZI SPACE SpA All right reserved

The USS heat pipes working fluid is ammonia.

An overview and main dimensions of the heat pipes are given in the next pictures:

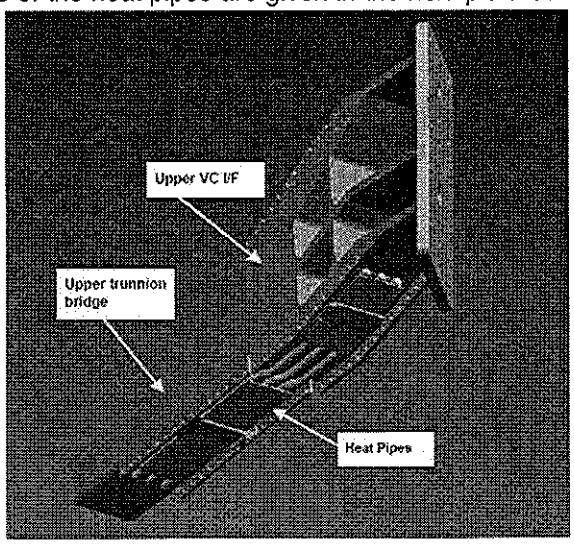

Fig. 4-14: USS Heat Pipes

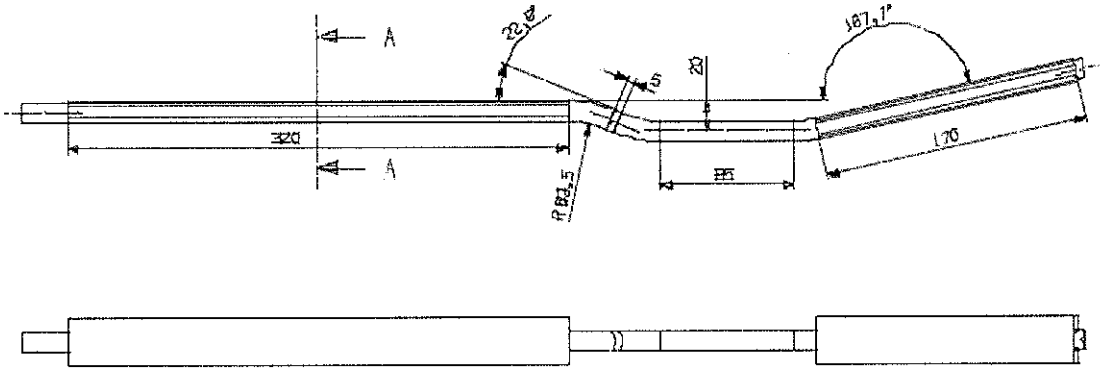

Fig. 4-15: CAB/USS Heat Pipes dimensions

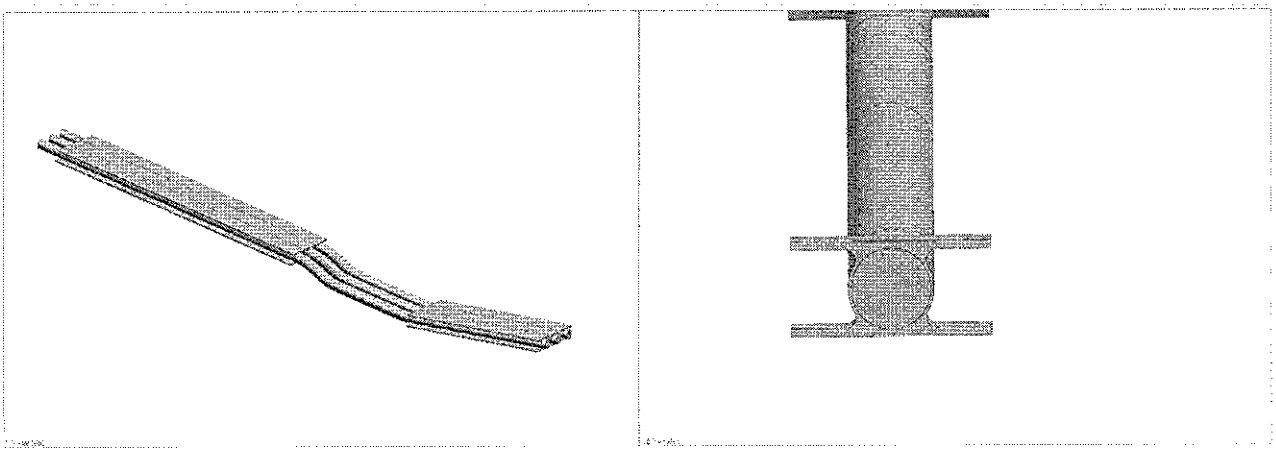

Fig 4-16: CAB/USS Heat Pipes layout

Questo documento contiene informazioni di proprietà di CARLO GAVAZZI SPACE SpA: Tutti i diritti sono riservati
All information contained in this document are property of CARLO GAVAZZI SPACE SpA All right reserved.

The cross section of the pipes is according to the following sketch:

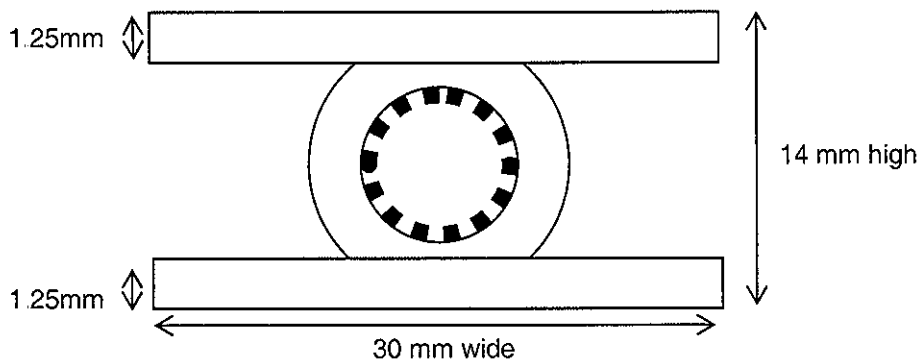

Fig. 4-17: CAB/USS Heat Pipes dimensions (cross section)

(please note that locally the contact flanges may need to be cut/shortened for integration purposes)

USS heat pipes are glued on the USS.
An addition retention method is provided by a sustain bracket, which clamps the pipes on the USS.

4.9 CAB TO USS FILLER

CAB shall be coupled to the USS by means of interface filler.
The filler shall grant a thermal conductance of at least 1000 $W/m^2/K$.

Questo documento contiene informazioni di proprietà di CARLO GAVAZZI SPACE SpA: Tutti i diritti sono riservati
All information contained in this document are property of CARLO GAVAZZI SPACE SpA. All right reserved.

ANNEX 1. CAB LHP DESIGN DESCRIPTION AND DRAWINGS

Questo documento contiene informazioni di proprietà di CARLO GAVAZZI SPACE SpA: Tutti i diritti sono riservati
All information contained in this document are property of CARLO GAVAZZI SPACE SpA. All right reserved

IberEspacio
Tecnología Aeroespacial

PROJECT:	CG022
CLIENT:	CARLO GAVAZZI SPACE SpA

TITLE:

CAB LHPs DESIGN FILE

DOCUMENT No: CG022-NT-0003	ISSUE: 1
ISSUED FOR: INFORMATION	DATE: 11.01.2008

Prepared by : MGX/EFZ

Reviewed by : DMG/MFP

Approved by : MGX

QUALITY RECORD

Retention Period: 5 years

MODIFICATION RECORD

Issue	Modification and Reasons for the Modification
1	Original Issue

PENDING OR PRELIMINARY INFORMATION

Concept	State

DISTRIBUTION LIST

External	Internal	Quantity / File's Type
CARLO GAVAZZI SPACE		1
	MGX	1
	JOK	1
	AGI	ORIGINAL

TABLE OF CONTENTS

Page

1. SCOPE **1**

2. DOCUMENTS **2**

2.1 APPLICABLE DOCUMENTS 2

3. ACRONYMS, DEFINITIONS, ABBREVIATIONS **3**

4. CAB LHP´S DESIGN **4**

4.1 COMPONENTS DESCRIPTION 4

4.1.1 Evaporator 4

4.1.2 Compensation chamber 4

4.1.3 Condenser 4

4.1.4 Transport lines 5

4.1.5 Pressure regulator valve 5

4.2 MASS SUMMARY 5

4.3 DRAWINGS 7

APPENDIX I CAB LHPs COMPLETE SET OF DRAWINGS

LIST OF FIGURES

Page

Figure 4-1 : ....*Aluminium Profile of the Condenser Saddles*..... 5

LIST OF TABLES

Page

Table 4-1 : ... *Upper LHP mass* 6
Table 4-2 : ..... *Lower LHP mass* 6

1. SCOPE

The objective of this document is to present the CAB LHPs detailed design. These LHPs are used to transfer the power from the CAB to the WAKE radiator. Each LHP consists of: One evaporator, one compensation chamber, one condenser, two transport lines (one for the vapour and the other one for the liquid) and one pressure regulator valve.

The LHP designs presented in this document are based on the first input data provided by CGS [AD1-AD3] and on the last routing proposed by CGS [AD4] at the end of December. Because of the implementation of this last modification, these designs differ from those considered for the thermal analysis [AD5]. The main differences between these designs are the length of the transport lines and, consequently, the dimensions of the compensation chamber.

This document includes also the part drawings, the assembly drawings and the interface drawings of the CAB LHPs.

Formato IT-3301-F4-1 Ed. 2

2. DOCUMENTS

2.1 APPLICABLE DOCUMENTS

[AD1]: "AMS02 CAB LOOP HEAT PIPE SPECIFICATION", Ref. AMS02-SP-CGS-007, Issue 1, 02.08.2007.

[AD2]: "CAB LHP AVAILABLE VOLUME", CGS Document.

[AD3]: CAB 3D MODELS in step format (07_CAB_LHP.stp, STAY_IN_ENLARGED.stp, WAKE_LHP_CAB_CORRECTED.stp) – Located at CGS ftp site.

[AD4]: "071219-WAKE+CAB_LHP.stp" – E-mail sent by CGS, 19.12.2007.

[AD5]: "CAB LHPs – THERMAL ANALYSIS REPORT", Ref: CG022-NT-0002, Issue, 1, 11.01.07.

3. ACRONYMS, DEFINITIONS, ABBREVIATIONS

CGS: Carlo Gavazzi Space

IE: IberEspacio.

LHP: Loop Heat Pipe.

4. CAB LHP'S DESIGN

4.1 COMPONENTS DESCRIPTION

4.1.1 Evaporator

The evaporator component is the same for both LHPs (upper and lower).

The outer diameter of the evaporator is 15.2 mm. The total mass of the evaporator case is about 46 g. This component consists of: primary wick, body and saddle.

The material used for the primary wick manufacturing is sintered nickel powder. The mass of the primary wick is 101 g (approximately) and there are four axial grooves machined in the external surface of the primary wick.

The evaporator is soldered to an aluminium saddle in order to facilitate the interface with the CAB baseplate. The total mass of this saddle is about 330 g.

4.1.2 Compensation chamber

The compensation chamber component is the same for both LHPs (upper and lower).

The volume of the compensation chamber is calculated using EcosimPro to satisfy the minimum volume requirement. The calculated compensation chamber volume is **99.8 cm^3** for the upper LHP and **96.3 cm^3** for the lower LHP. To simplify the design, the same compensation chamber has been selected for both LHPs. Considering that the compensation chamber is cylindrical, to maintain the minimum required volume, the following dimensions are defined for the compensation chamber:

- Length = 92.5 mm
- Outer diameter = 40 mm

The compensation chamber mass is about 89 g.

4.1.3 Condenser

The condenser footprint for each LHP has been defined in accordance with AD1. In order to facilitate the interface between the condenser tube and the radiator, the condenser tube is soldered, in the straight stretches, to aluminium saddles. The outer diameter of the tube is 4 mm, and the aluminium profile of the saddles is illustrated in the next figure:

Formato IT-3301-F4-1 Ed. 2

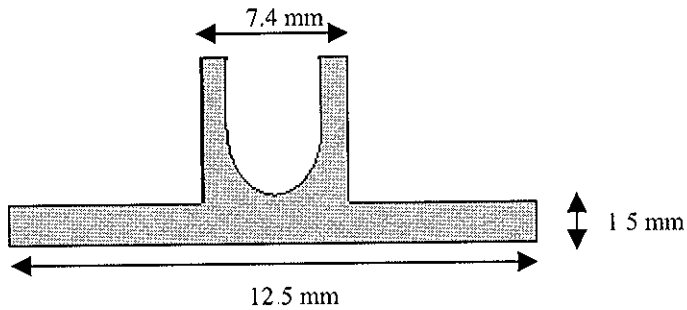

Figure 4-1 : *Aluminium Profile of the Condenser Saddles*

The mass of each of the condensers (including the saddles) is about 991 g.

4.1.4 Transport lines

The outer diameter of the vapour lines is 4 mm. The total lengths for each LHP are the following:

- Lower LHP – 1.47 m (mass of about 65 g)
- Upper LHP – 1.825 m (mass of about 81 g)

With regard to the liquid line, the pressure losses are not a problem. Therefore, the outer diameter is 3 mm to reduce the volume of the compensation chamber and the total LHP mass. The total lengths for each LHP are the following:

- Lower LHP – 1.264 m (mass of about 40 g)
- Upper LHP – 1.347 m (mass of about 43 g)

Finally, there is a bypass line that connects the pressure regulator valve to the compensation chamber. This bypass line is the same for both LHPs and its length is 7 mm.

4.1.5 Pressure regulator valve

The total mass of the valve is about 50 g. The set point specified for the valve is -10ºC.

4.2 MASS SUMMARY

The calculated mass for the complete LHPs system is detailed in the following tables:

UPPER LHP Component	Mass (g)
Evaporator Body (cylindrical part)	46
Primary Wick	101
Evaporator Saddle	330
Compensation Chamber Body (cylindrical part)	89

UPPER LHP Component	Mass (g)
Condenser (including the saddles)	991
Vapour Line	81
Liquid Line	43
Pressure Regulator Valve	50
Working Fluid	61
Additional components for welding and fixing (typically about the 5% of the total mass of the LHP)	90
Total (approx)	1882

Table 4-1 : *Upper LHP mass*

LOWER LHP Component	Mass (g)
Evaporator Body (cylindrical part)	46
Primary Wick	101
Evaporator Saddle	330
Compensation Chamber Body (cylindrical part)	89
Condenser (including the saddles)	991
Vapour Line	65
Liquid Line	40
Pressure Regulator Valve	50
Working Fluid	61
Additional components for welding and fixing (typically about the 5% of the total mass of the LHP)	89
Total (approx)	1862

Table 4-2 : *Lower LHP mass*

Complete System	Mass (g)
Upper LHP	1882
Lower LHP	1862
Valves Support	60
Transport Lines Support	70
Total (approx)	3874

In any case, the total mass of the LHP will be determined exactly after the manufacturing process.

4.3 DRAWINGS

The complete set of drawings (part drawings, assembly drawings and interface drawings) can be found in APPENDIX I.

APPENDIX I

CAB LHPs COMPLETE SET OF DRAWINGS

NOTES:

1. -ASSEMBLY TOLERANCE ACCORDING TO Js16.
2. -* REFERENCE DIMENSION.

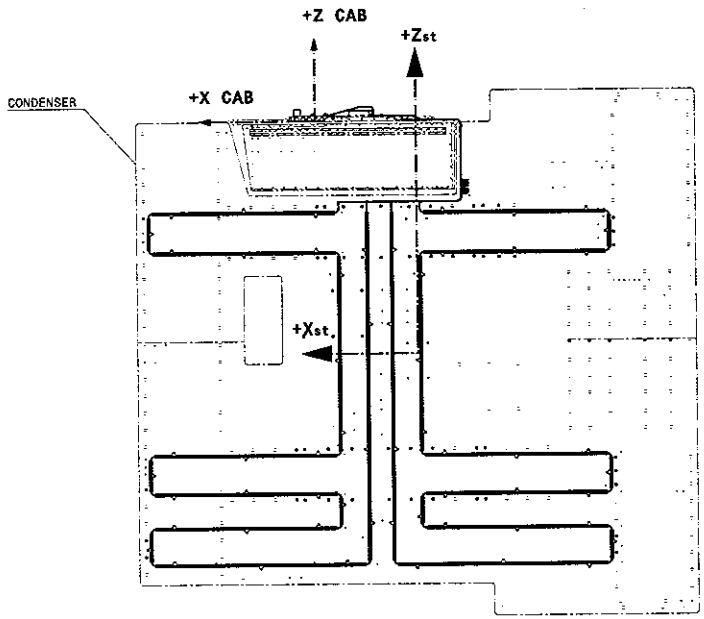

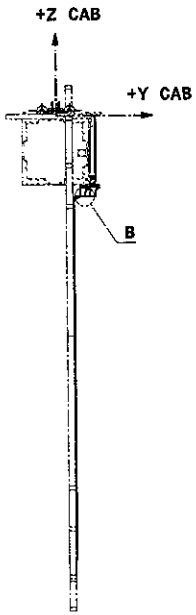

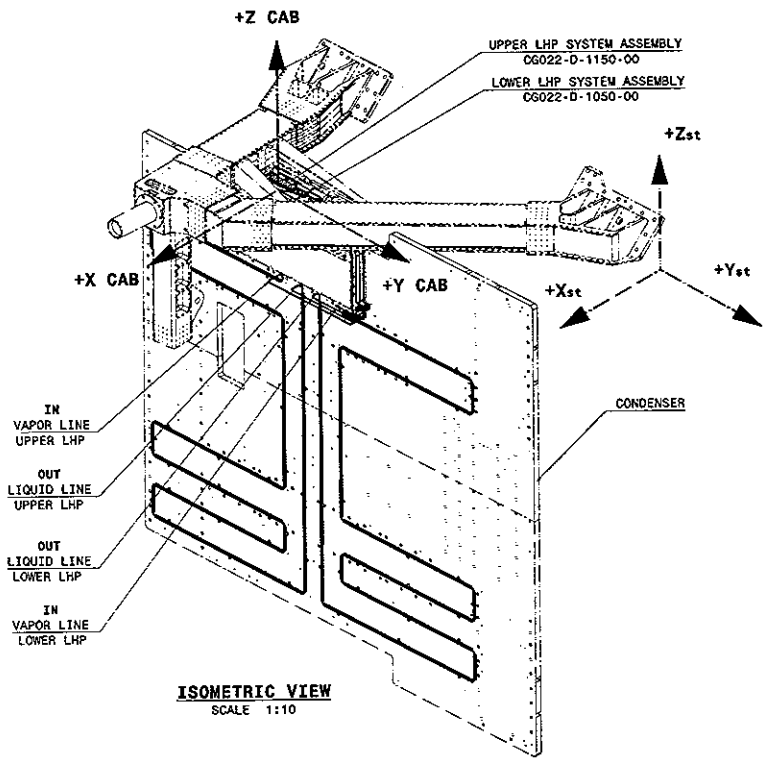

ISOMETRIC VIEW
SCALE 1:10

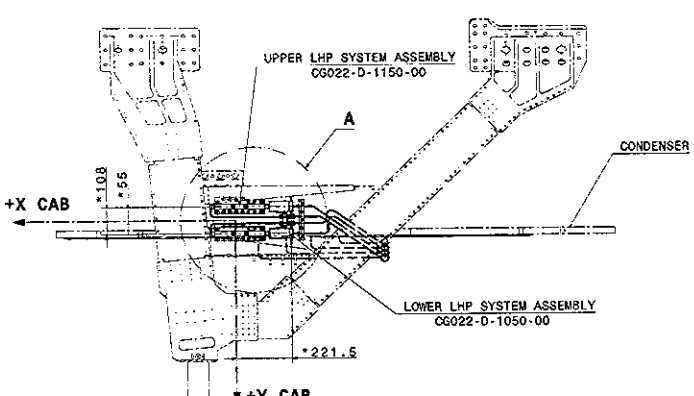

INFORMACION PROPIETARIA
PROPERTY INFORMATION

	NOMBRE	FIRMA	FECHA
REALIZADO	EFZ		06-01-05
REVISADO	MFP		14-01-05
APROBADO	MOX		14-01-05

INFORMATION

NEW SUBSTITUTES:

CG022-D-1000-00

CAB LHPs SYSTEM ASSEMBLY

Scale: 1:10 | Sheet: 1 of 1

14/14

NOTES:

1. -ASSEMBLY TOLERANCE ACCORDING TO Js18.
2. -* REFERENCE DIMENSION.

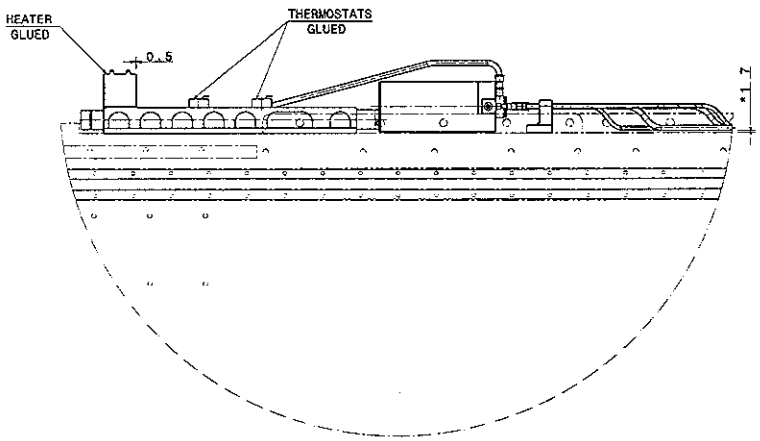

VIEW FROM C
THERMOSTATS AND HEATER ASSY
SCALE 1:2

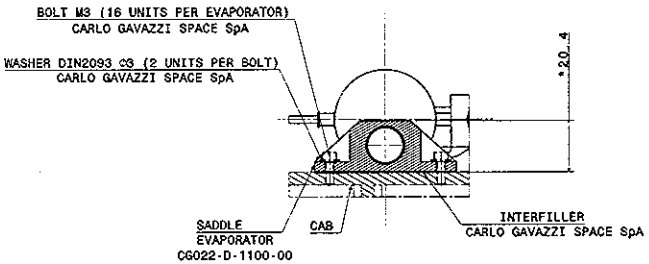

SECTION VIEW D-D
SCALE 1:1

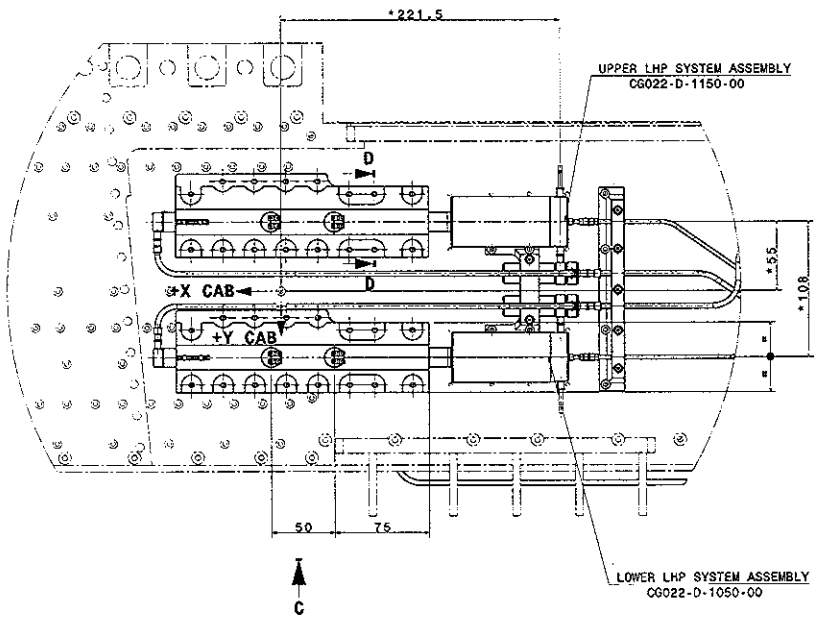

DETAIL A
SCALE 1:2

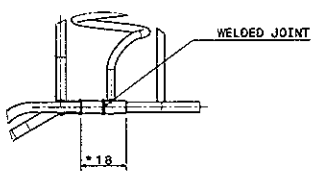

DETAIL B
SCALE 1:1

INFORMACION PROPIETARIA

PROPERTY INFORMATION

	NOMBRE	FIRMA	FECHA
REALIZADO	EFZ		08-01-06
REVISADO	MFP		14-01-06
APROBADO	MEX		14-01-06
SECTOR PHAST	INFORMATION		

iberespacio

CAB LHPs
SYSTEM
ASSEMBLY

CG022-D-1000-00

15/34

NOTES:

1. -ASSEMBLY TOLERANCE ACCORDING TO Js18.
2. -* REFERENCE DIMENSION.
3. -SOLDERING PROCESSES ACCORDING TO IBER-ESPACIO METHOD.

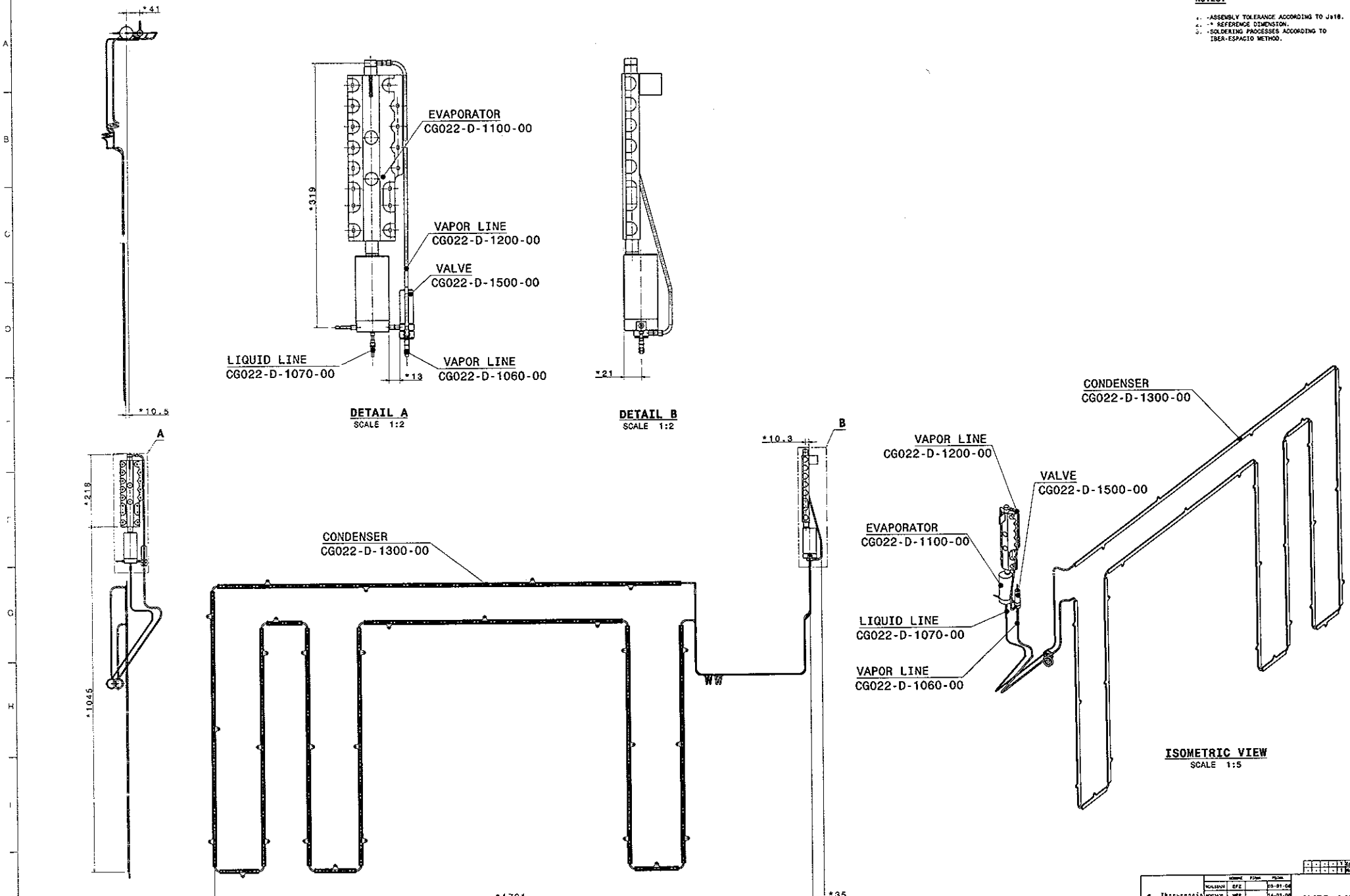

	NOMBRE	FIRMA	FECHA
REALIZADO	EFZ		03-01-06
REVISADO	MFP		14-01-06
APROBADO	MOX		14-01-06
CONTROL PHASE:	INFORMATION		

Iberespacio

LOWER LHP
SYSTEM ASSY

CG022-DI-1050-00

Scale 1:5 | Sheet 1 of 1

INFORMATION PROPERTY OF IBERESPACIO S.A.

PROPERTY INFORMATION

1/3

NOTES:

1. -ASSEMBLY TOLERANCE ACCORDING TO Js18.
2. * REFERENCE DIMENSION.
3. -SOLDERING PROCESSES ACCORDING TO IBER-ESPACIO METHOD.

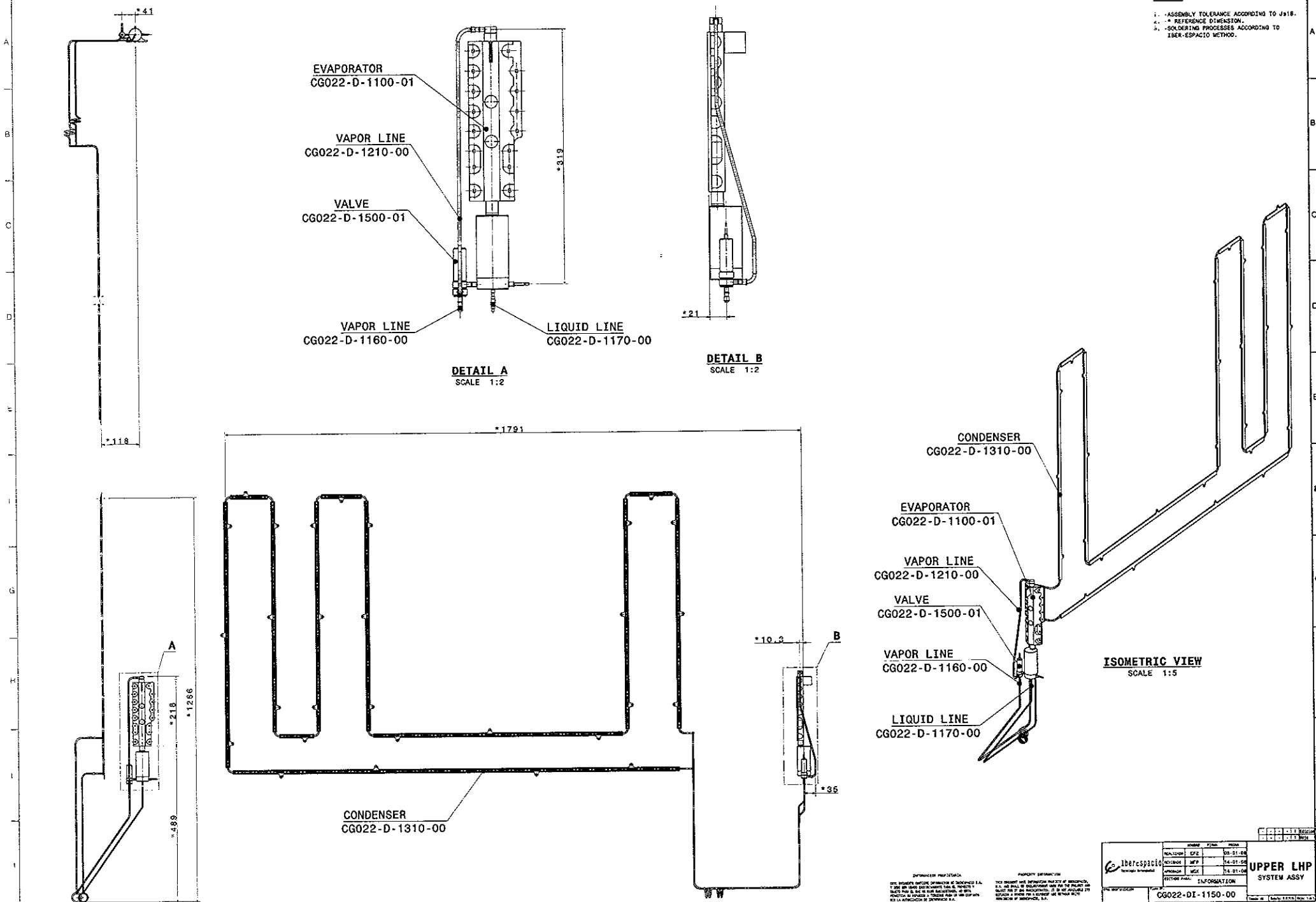

	NOMBRE	FIRMA	FECHA
REALIZADO	EPZ		05-01-06
REVISADO	MFP		14-01-06
APROBADO	MGX		16-01-06
ESTADO FINAL	INFORMATION		

Iberespacio Tecnologia Aeroespacial

UPPER LHP
SYSTEM ASSY

CG022-DI-1150-00

Escala: 1:5 | Hoja: 1 de 1

INFORMACION PROPIEDAD INTELECTUAL

PROPERTY INFORMATION

147

NOTES:

1. -MATERIALS BY STANDARD OF IBERESPACIO
2. -GENERAL TOLERANCE: H12-h12-Js14
3. -SURFACE TREATMENT: NONE.

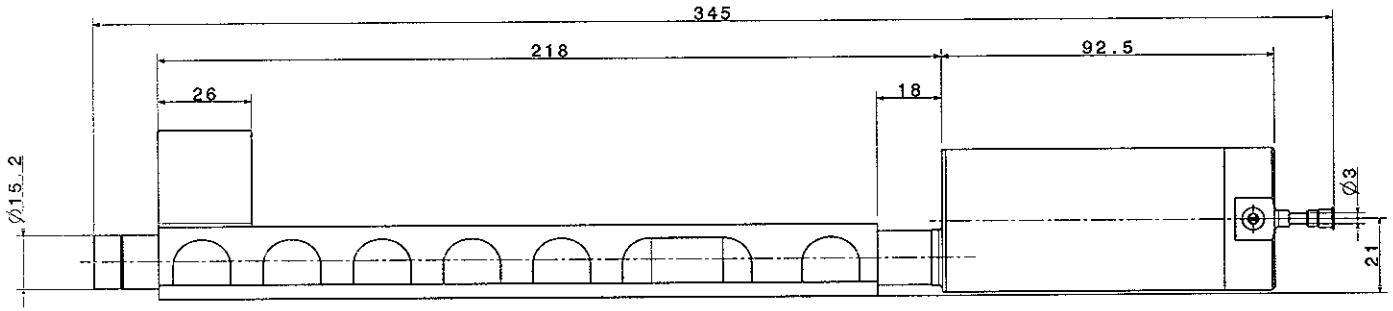

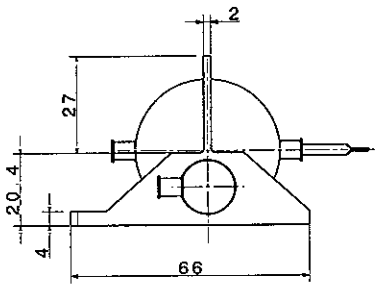

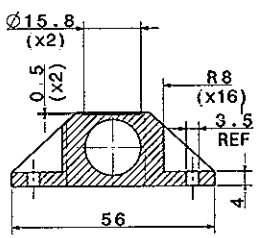

SECTION A-A
SCALE 1:1
90° ROTATED

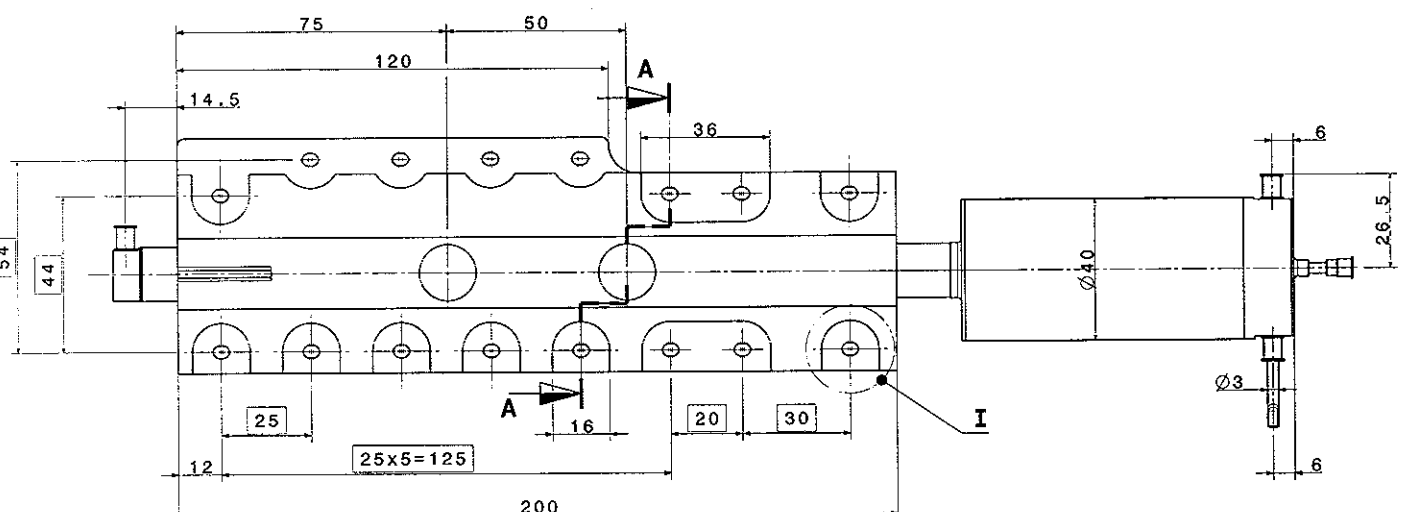

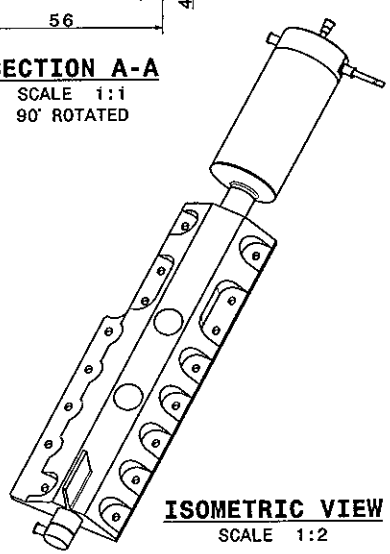

ISOMETRIC VIEW
SCALE 1:2

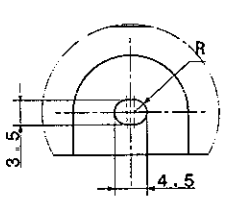

DETAIL I
SCALE 2:1
(16 PLACES)

INFORMACION PROPIETARIA

ESTE DOCUMENTO CONTIENE INFORMACION DE IBERESPACIO S.A. Y DEBE SER USADO EXCLUSIVAMENTE PARA EL PROYECTO Y OBJETO PARA EL QUE HA SIDO SUMINISTRADO. NO ESTA PERMITIDA SU DIFUSION A TERCEROS PARA UN USO DISTINTO SIN LA AUTORIZACION DE IBERESPACIO S.A.

PROPERTY INFORMATION

THIS DOCUMENT HAVE INFORMATION PROPIETY OF IBERESPACIO, S.A. AND SHALL BE EXCLUSIVEMENT USED FOR THE PROJECT AND OBJECT FOR IT WAS SUMINISTRATED. IT IS NOT AVAILABLE ITS DIFUSION A OTHERS FOR A DIFERENT USE WITHOUT WRITE PERMISSION OF IBERESPACIO, S.A.

	NOMBRE	FIRMA	FECHA
REALIZADO	EFZ		27-12-07
REVISADO	MFP		14-01-08
APROBADO	MGX		14-01-08
EDITADO PARA:	INFORMATION		

IberEspacio Tecnología Aeroespacial

OTRA IDENTIFICACION:

PLANO Nº: CG022-D-1100-00

EVAPORATOR
ASSEMBLY DRAWING

Tamaño: A2 | Escala: 1:2 | Hoja: 1 de 1

-	-	-	-	-	1	Edicion
-	-	-	-	-	1	Hoja

NOTES:

1. -MATERIALS BY STANDARD OF IBERESPACIO
2. -GENERAL TOLERANCE: H12-h12-Js14
3. -SURFACE TREATMENT: NONE.

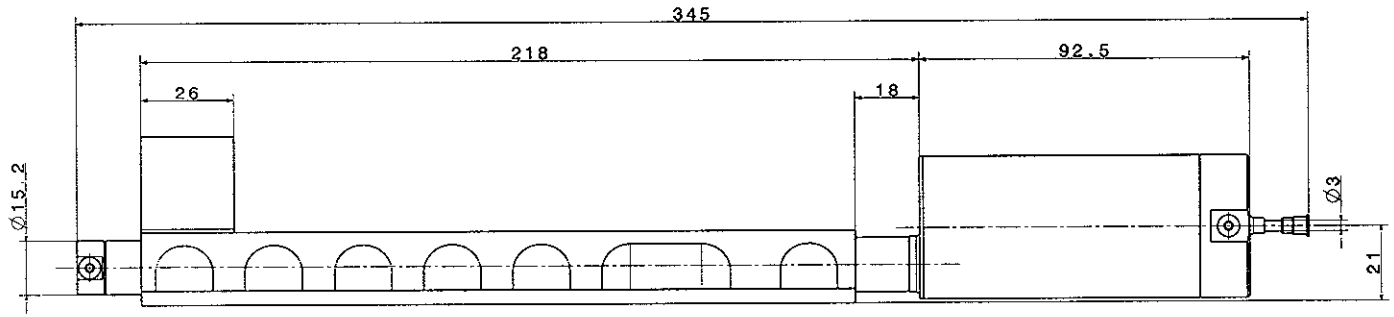

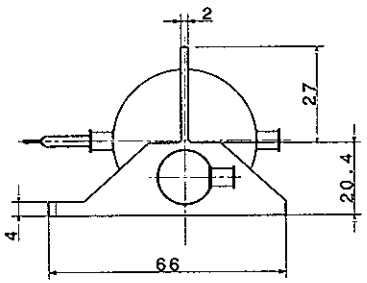

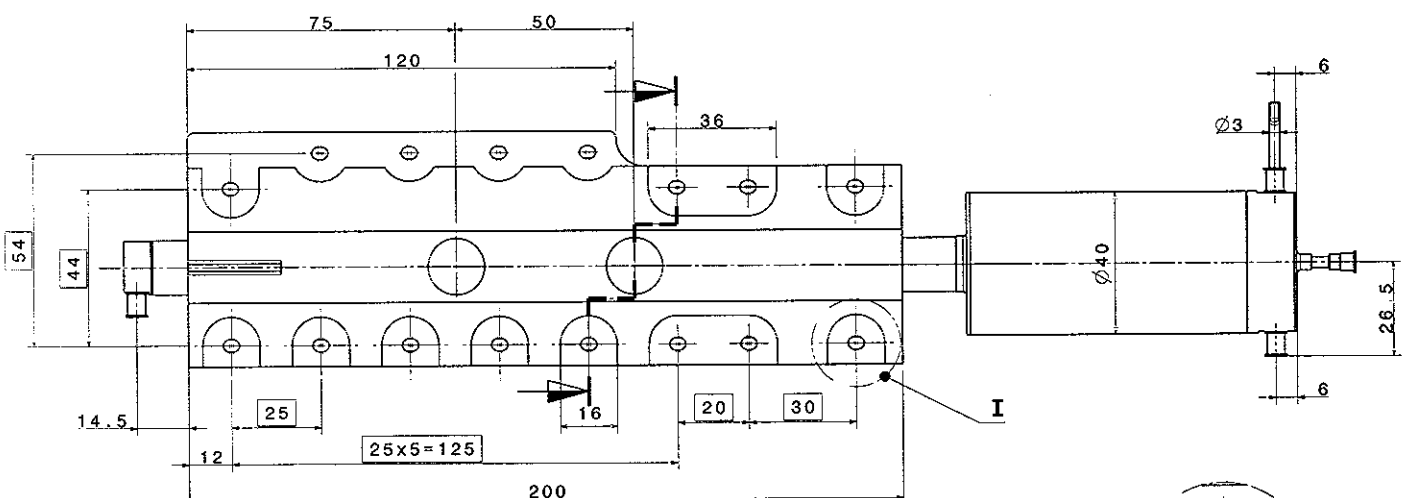

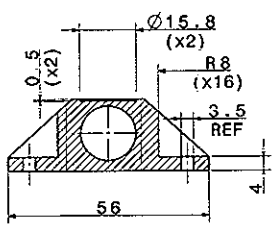

SECTION A-A
SCALE 1:1
90° ROTATED

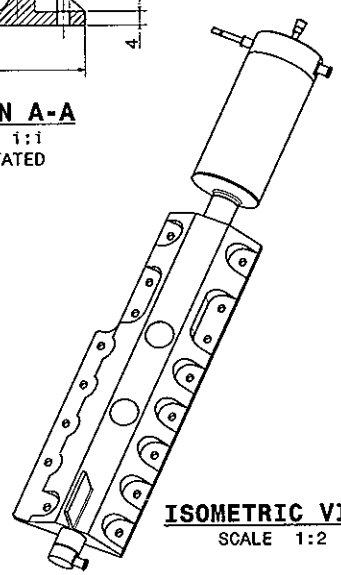

ISOMETRIC VIEW
SCALE 1:2

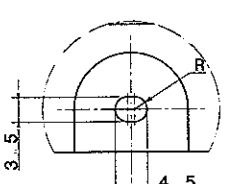

DETAIL I
SCALE 2:1
(16 PLACES)

-	-	-	1 Edicion
-	-	-	1 Hoja

	NOMBRE	FIRMA	FECHA
REALIZADO	EFZ		27-12-07
REVISADO	MFP		14-01-08
APROBADO	MGX		14-01-08

EDITADO PARA: INFORMATION

IberEspacio Tecnología Aeroespacial

EVAPORATOR
ASSEMBLY DRAWING

CTNA IDENTIFICACION:

PLANO Nº: CG022-D-1100-01

Tamaño: A2 | Escala: 1:1 | Hoja: 1 de 1

INFORMACION PROPIETARIA

ESTE DOCUMENTO CONTIENE INFORMACION DE IBERESPACIO S.A. Y DEBE SER USADO EXCLUSIVAMENTE PARA EL PROYECTO Y OBJETO PARA EL QUE HA SIDO SUMINISTRADO. NO ESTA PERMITIDA SU DIFUSION A TERCEROS PARA UN USO DISTINTO SIN LA AUTORIZACION DE IBERESPACIO S.A.

PROPERTY INFORMATION

THIS DOCUMENT HAVE INFORMATION PROPERTY OF IBERESPACIO, S.A. AND SHALL BE EXCLUSIVELY USED FOR THE PROJECT AND OBJECT FOR IT WAS SUMINISTRATED. IT IS NOT AVAILABLE ITS DIFUSION A OTHERS FOR A DIFERENT USE WITHOUT WRITE PERMISSION OF IBERESPACIO, S.A.

NOTES:

1. -MATERIALS BY STANDARD OF IBER-ESPACIO
2. -GENERAL TOLERANCE: H12-h12-Js12
3. -SURFACE TREATMENT: NONE.

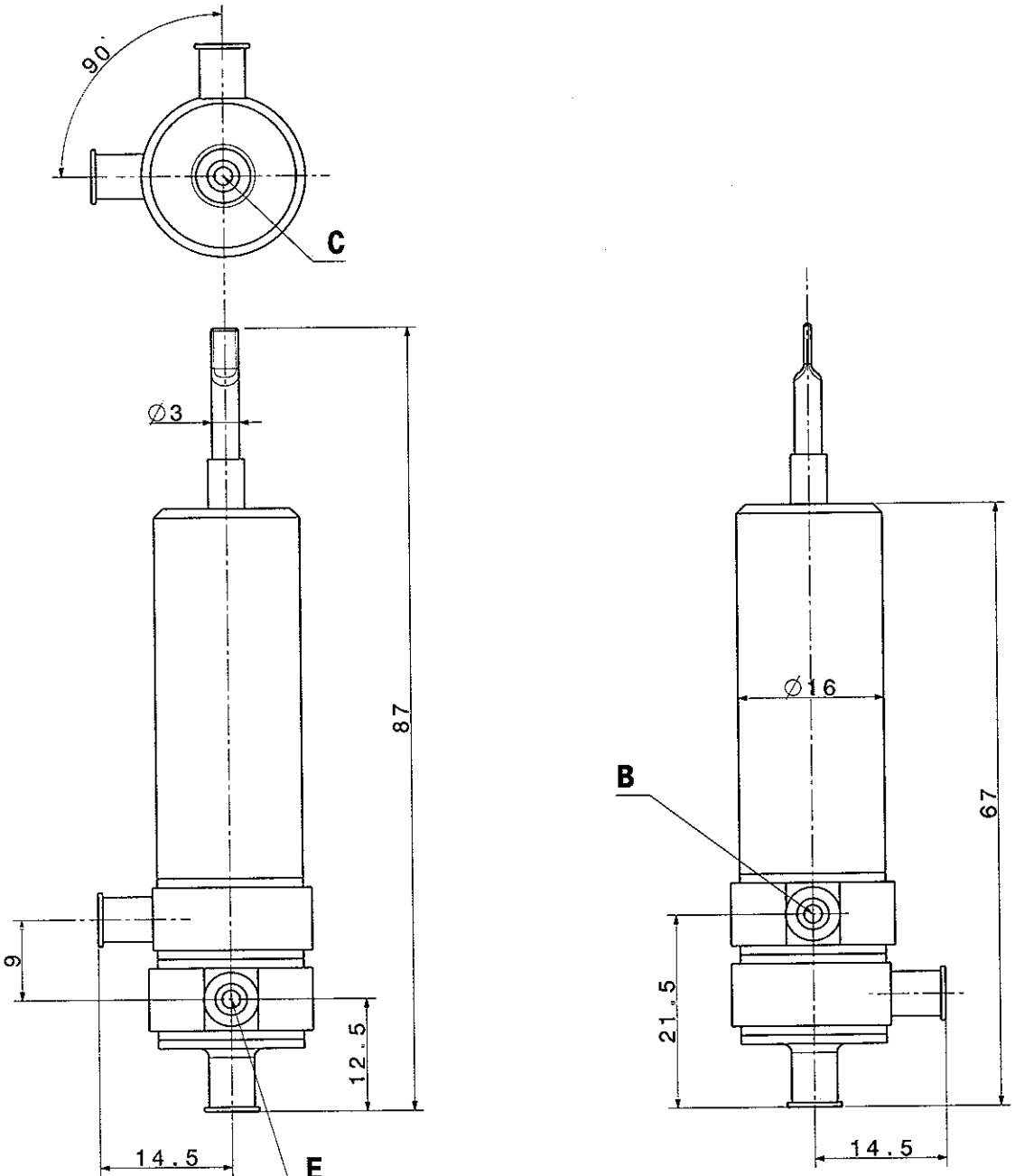

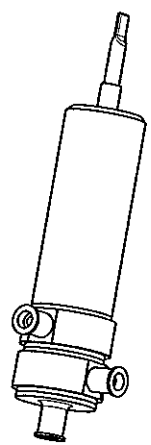

ISOMETRIC VIEW

SCALE 1:1

-	-	-	-	1	Edicion
-	-	-	-	1	Hoja

IberEspacio
Tecnología Aeroespacial

	NOMBRE	FIRMA	FECHA
REALIZADO	EFZ		27-12-07
REVISADO	MFP		14-01-08
APROBADO	MGX		14-01-08

EDITADO PARA: INFORMATION

OTRA IDENTIFICACION:

Plano Nº: CG022-D-1500-00

REGULATOR
ASSEMBLY
DRAWING

Tamaño: A3 | escala: 2:1; 1:1 | Hoja: 1 de 1

INFORMACION PROPIETARIA

ESTE DOCUMENTO CONTIENE INFORMACION DE IBERESPACIO S.A. Y DEBE SER USADO EXCLUSIVAMENTE PARA EL PROYECTO Y OBJETO PARA EL QUE HA SIDO SUMINISTRADO. NO ESTA PERMITIDA SU DIFUSION A TERCEROS PARA UN USO DISTINTO SIN LA AUTORIZACION DE IBERESPACIO S.A.

PROPERTY INFORMATION

THIS DOCUMENT HAVE INFORMATION PROPIETY OF IBERESPACIO, S.A. AND SHALL BE EXCLUSIVEMENT USED FOR THE PROJECT AND OBJECT FOR IT WAS SUMINISTRATED. IT IS NOT AVAILABLE ITS DIFUSION A OTHERS FOR A DIFERENT USE WITHOUT WRITE PERMISSION OF IBERESPACIO, S.A.

IT 03.01-F0

2031

NOTES:

1. -MATERIALS BY STANDARD OF IBER-ESPACIO
2. -GENERAL TOLERANCE: H12-h12-Js12
3. -SURFACE TREATMENT: NONE.

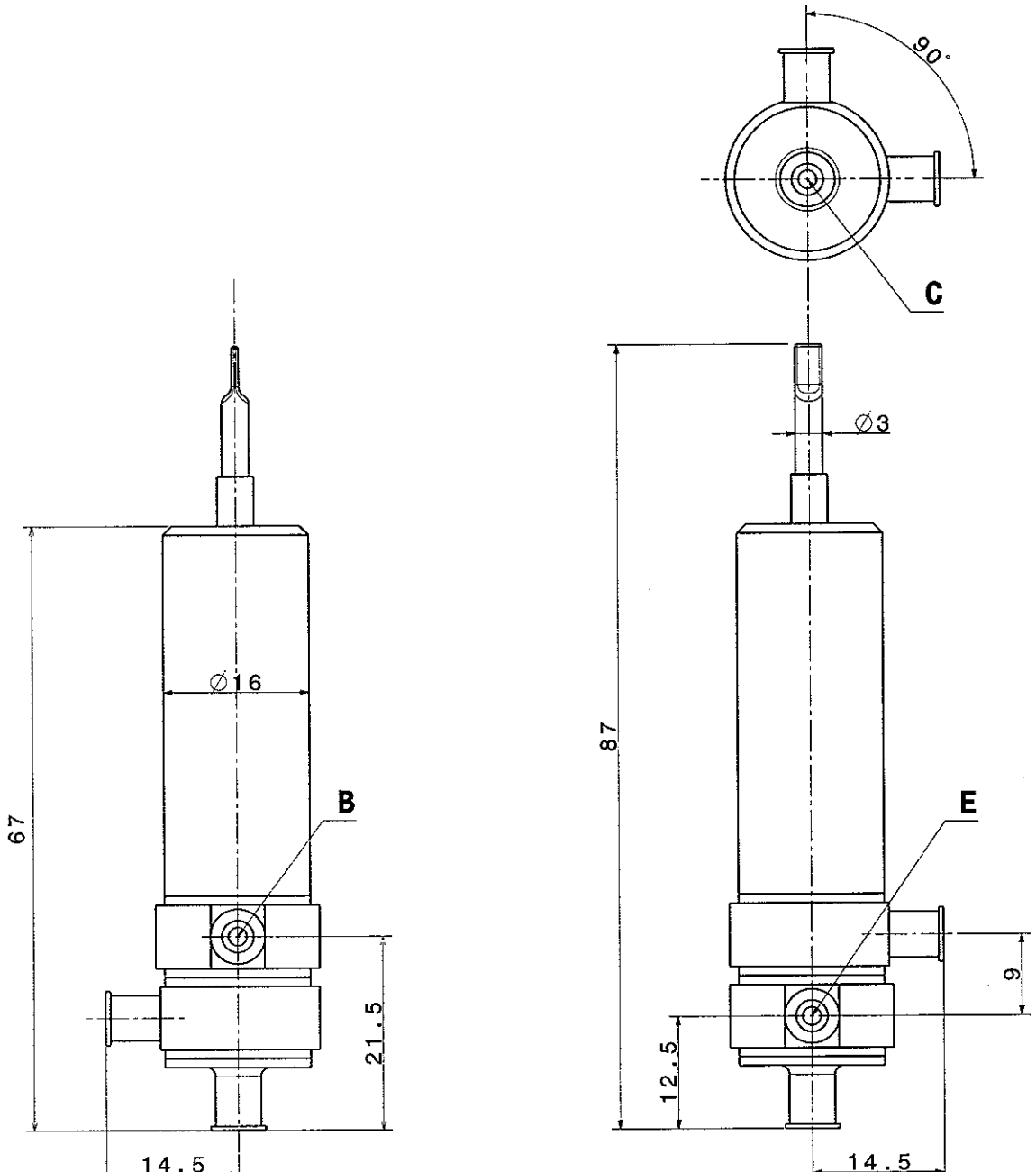

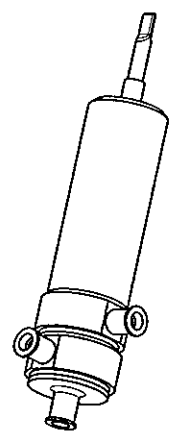

ISOMETRIC VIEW

SCALE 1:1

INFORMACION PROPIETARIA

ESTE DOCUMENTO CONTIENE INFORMACION DE IBERESPACIO S.A. Y DEBE SER USADO EXCLUSIVAMENTE PARA EL PROYECTO Y OBJETO PARA EL QUE HA SIDO SUMINISTRADO. NO ESTA PERMITIDA SU DIFUSION A TERCEROS PARA UN USO DISTINTO SIN LA AUTORIZACION DE IBERESPACIO S.A.

PROPERTY INFORMATION

THIS DOCUMENT HAVE INFORMATION PROPIETY OF IBERESPACIO, S.A. AND SHALL BE EXCLUSIVEMENT USED FOR THE PROJECT AND OBJECT FOR IT WAS SUNINISTRATEO. IT IS NOT AVAILABLE ITS DIFUSION A OTHERS FOR A DIFERENT USE WITHOUT WRITE PERMISSION OF IBERESPACIO, S.A.

-	-	-	-	1	Edicion
-	-	-	-	1	Hoja

IberEspacio
Tecnología Aeroespacial

	NOMBRE	FIRMA	FECHA
REALIZADO	EFZ		27-12-07
REVISADO	MFP		14-01-08
APROBADO	MGX		14-01-08

EDITADO PARA: INFORMATION

OTRA IDENTIFICACION:

Plano nº: CG022-D-1500-01

REGULATOR
ASSEMBLY
DRAWING

Tamaño: A3 | Escala: 2:1; 1:1 | Hoja: 1 de 1

IT 3301 FS

21 31

NOTES:

1. -MATERIALS BY STANDARD OF IBERESPACIO
2. -GENERAL TOLERANCE: H12-h12-Js16
3. -SURFACE TREATMENT: NONE.
4. -ALL DIMENSIONS ARE REFERENCE
5. -IN THE BENDING ZONE IT IS ALLOWED TO CHANGE CROSS-SECTION OF THE BODY UP ± 0,5 mm.

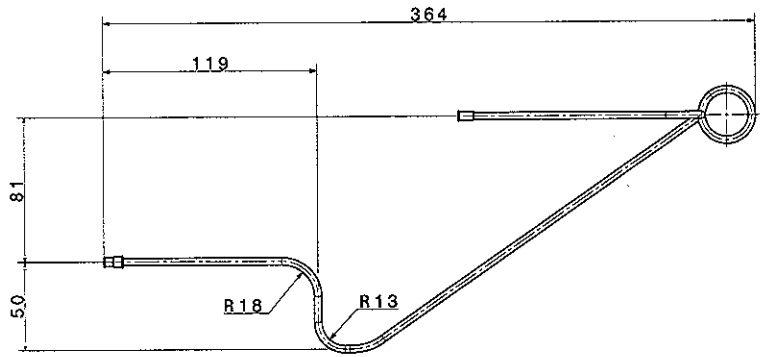

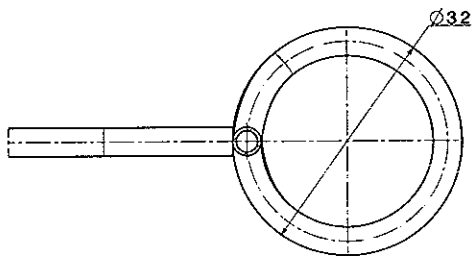

SECTION A-A
SCALE 2:1

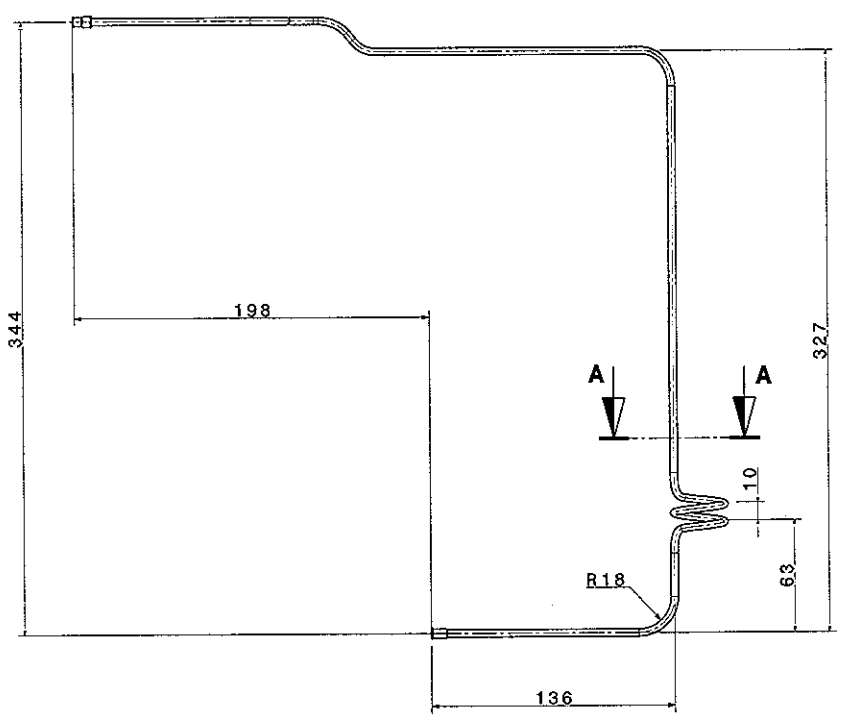

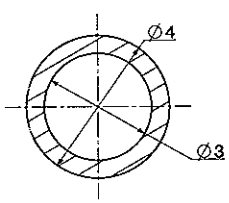

PIPE SECTION
SCALE 10:1

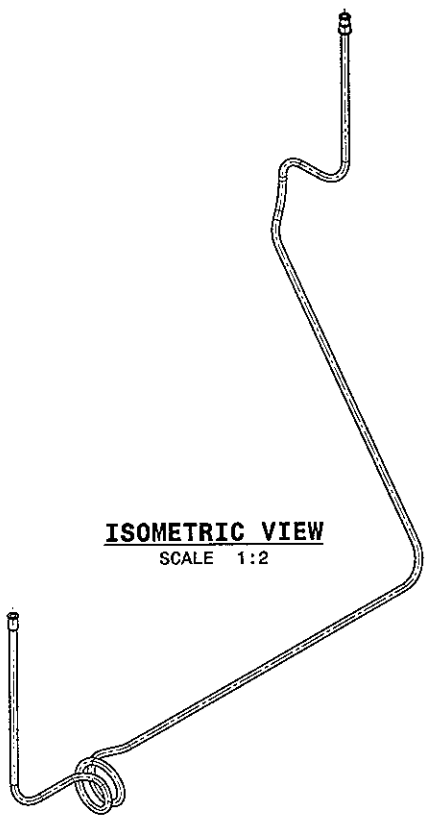

ISOMETRIC VIEW
SCALE 1:2

INFORMACION PROPIETARIA

ESTE DOCUMENTO CONTIENE INFORMACION DE IBERESPACIO S.A. Y DEBE SER USADO EXCLUSIVAMENTE PARA EL PROYECTO Y SUJETO PARA EL QUE HA SIDO SUMINISTRADO. NO ESTA PERMITIDA SU DIFUSION A TERCEROS PARA SU USO DISTINTO SIN LA AUTORIZACION DE IBERESPACIO S.A.

PROPERTY INFORMATION

THIS DOCUMENT HAVE INFORMATION PROPERTY OF IBERESPACIO, S.A. AND SHALL BE EXCLUSIVEMENT USED FOR THE PROJECT AND OBJECT FOR IT WAS SUNTHISTRATED. IT IS NOT AVAILABLE ITS DIFUSION A OTHERS FOR A DIFERENT USE WITHOUT WRITE PERMISSION OF IBERESPACIO, S.A.

	1	Edicion
	1	Hoja

IberEspacio Tecnología Aeroespacial

	NOMBRE	FIRMA	FECHA
REALIZADO	EFZ		27-12-07
REVISADO	MFP		14-01-08
APROBADO	MGX		14-01-08
EDITADO PARA:	INFORMATION		

VAPOR LINE
ASSEMBLY DRAWING

OTRA IDENTIFICACION:

Plano Nº: CG022-D-1060-00

Tamaño: A2 | Escala: 1:1 | Hoja: 1 de 1

22 ε 1

NOTES:

1. -MATERIALS BY STANDARD OF IBERESPACIO
2. -GENERAL TOLERANCE: H12-h12-Js16
3. -SURFACE TREATMENT: NONE.
4. -ALL DIMENSIONS ARE REFERENCE
5. -IN THE BENDING ZONE IT IS ALLOWED TO CHANGE CROSS-SECTION OF THE BODY UP ± 0,5 mm.

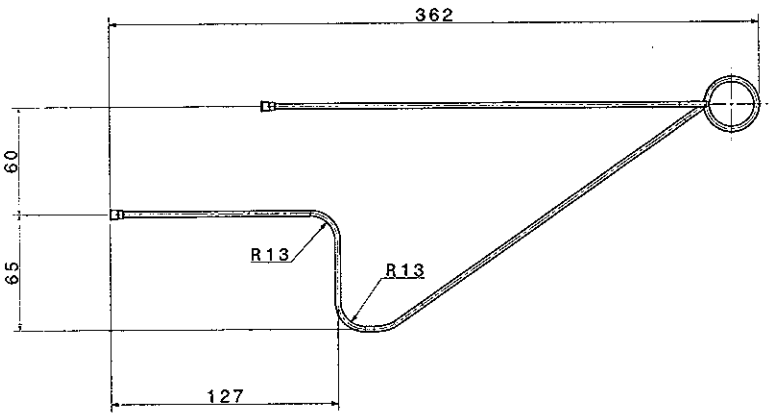

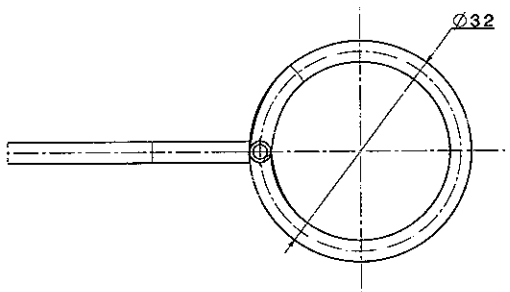

SECTION A-A
SCALE 2:1

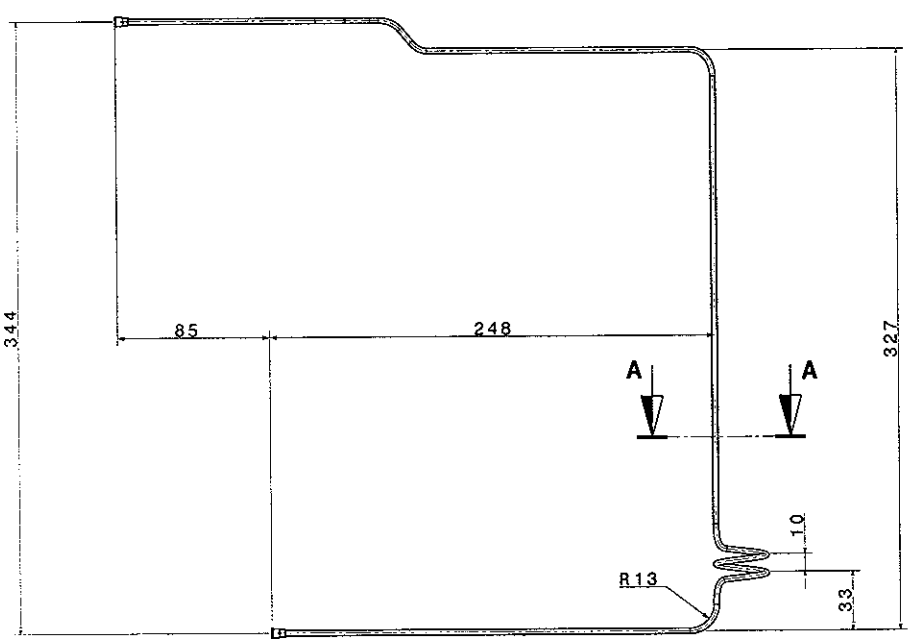

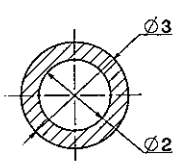

PIPE SECTION
SCALE 10:1

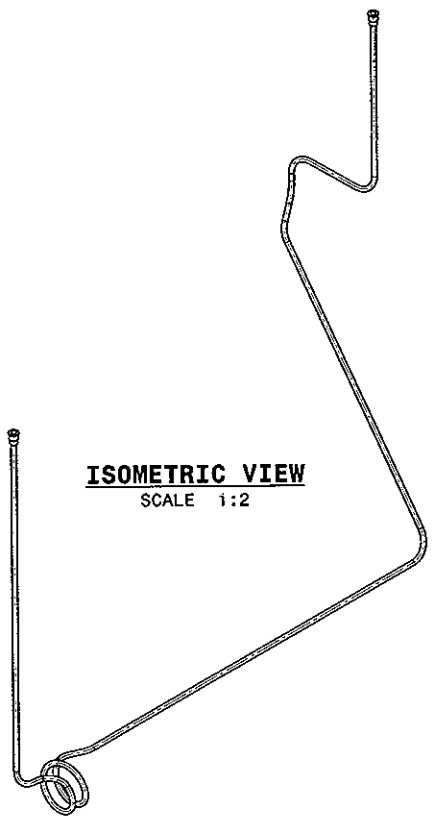

ISOMETRIC VIEW
SCALE 1:2

INFORMACION PROPIETARIA

ESTE DOCUMENTO CONTIENE INFORMACION DE IBERESPACIO S.A. Y DEBE SER USADO EXCLUSIVAMENTE PARA EL PROYECTO Y OBJETO PARA EL QUE HA SIDO SUMINISTRADO. NO ESTA PERMITIDA SU DIFUSION A TERCEROS PARA UN USO DISTINTO SIN LA AUTORIZACION DE IBERESPACIO S.A.

PROPERTY INFORMATION

THIS DOCUMENT HAVE INFORMATION PROPIETY OF IBERESPACIO, S.A. AND SHALL BE EXCLUSIVEMENT USED FOR THE PROJECT AND OBJECT FOR IT WAS SUMINISTRATED. IT IS NOT AVAILABLE ITS DIFUSION A OTHERS FOR A DIFERENT USE WITHOUT WRITE PERMISSION OF IBERESPACIO, S.A.

IberEspacio
Tecnología Aeroespacial

	NOMBRE	FIRMA	FECHA
REALIZADO	EFZ		28-12-07
REVISADO	MFP		14-01-08
APROBADO	MGX		14-01-08
EDITADO PARA:	INFORMATION		

-	-	1 Edición
-	-	1 Hoja

LIQUID LINE
ASSEMBLY DRAWING

ETSA IBERESPACIO

PLANO Nº: CG022-D-1070-00

Tamaño: A2 | Escala: 1:1/1:2 | Hoja: 1 de 1

2
3
3

NOTES:

1. -MATERIALS BY STANDARD OF IBERESPACIO
2. -GENERAL TOLERANCE: H12-h12-Js16
3. -SURFACE TREATMENT: NONE.
4. -ALL DIMENSIONS ARE REFERENCE
5. -IN THE BENDING ZONE IT IS ALLOWED TO CHANGE CROSS-SECTION OF THE BODY UP ± 0,5 mm.

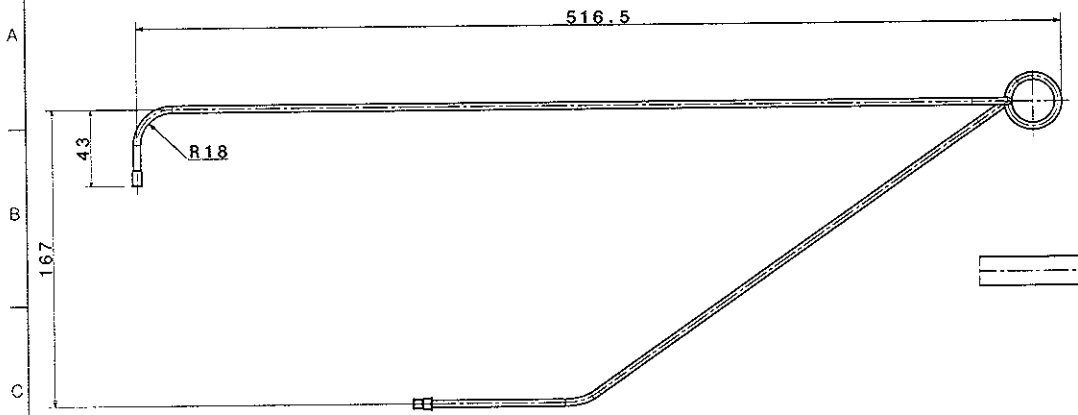

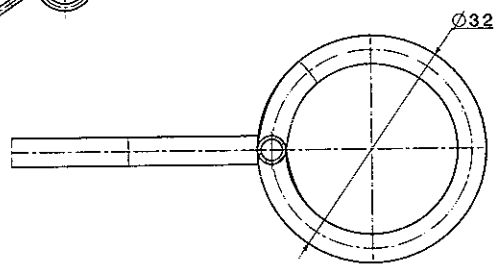

SECTION A-A
SCALE 2:1

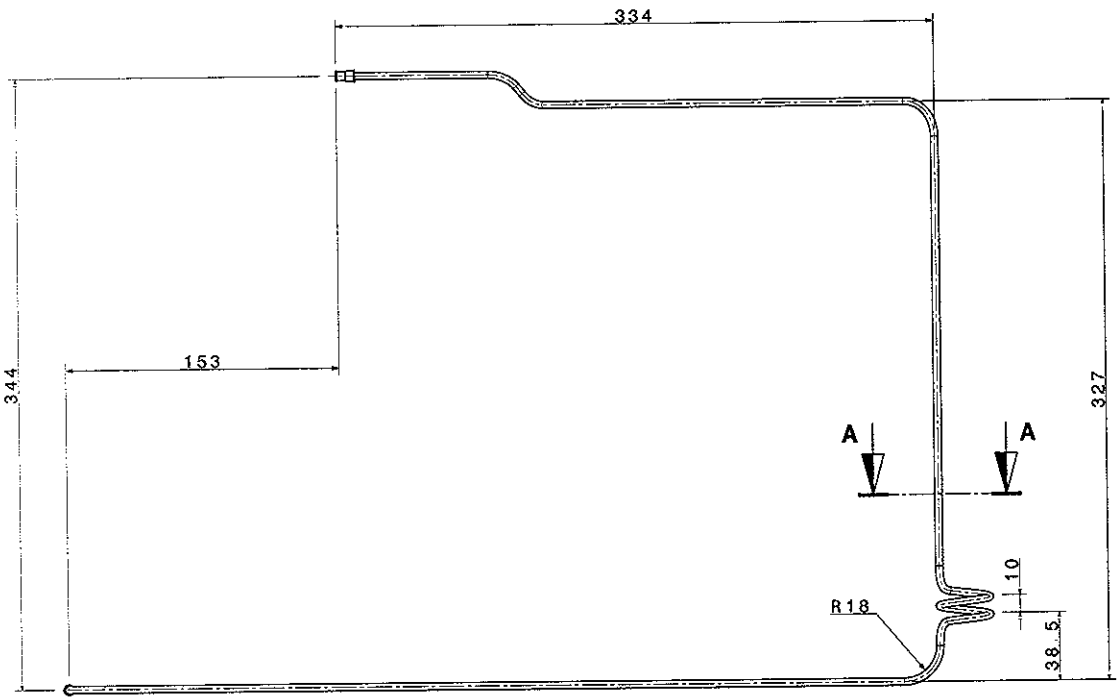

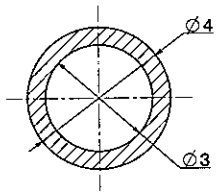

PIPE SECTION
SCALE 10:1

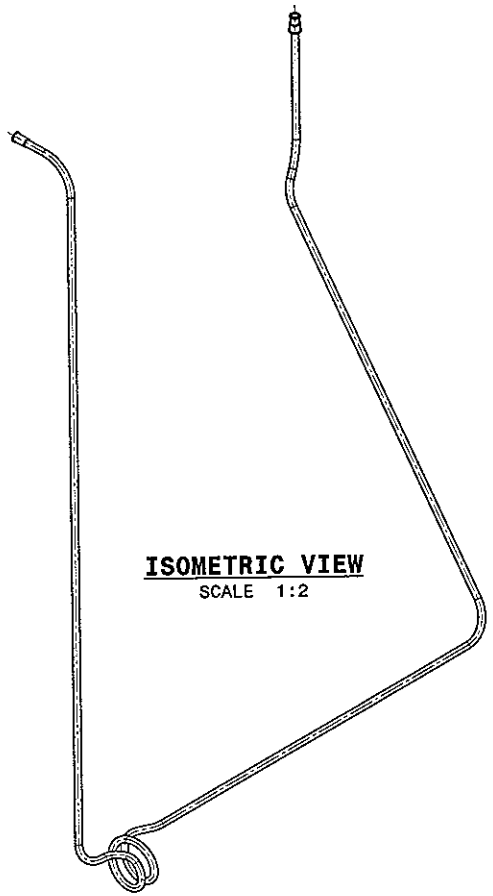

ISOMETRIC VIEW
SCALE 1:2

-	-	-	-	1 Edición
-	-	-	-	1 Hoja

	NOMBRE	FIRMA	FECHA
REALIZADO	EFZ		28-12-07
REVISADO	MFP		14-01-08
APROBADO	MGX		14-01-08
EDITADO PARA:	INFORMATION		

IberEspacio Tecnología Aeroespacial

VAPOR LINE
ASSEMBLY DRAWING

Nº DE IDENTIFICACIÓN:

Plano Nº: CG022-D-1160-00

Tamaño: A2 | Escala: 1:1 | Hoja: 1 de 1

INFORMACION PROPIETARIA

ESTE DOCUMENTO CONTIENE INFORMACION DE IBERESPACIO S.A. Y DEBE SER USADO EXCLUSIVAMENTE PARA EL PROYECTO Y OBJETO PARA EL, QUE HA SIDO SUMINISTRADO. NO ESTA PERMITIDA SU DIFUSION A TERCEROS PARA UN USO DISTINTO SIN LA AUTORIZACION DE IBERESPACIO S.A.

PROPERTY INFORMATION

THIS DOCUMENT HAVE INFORMATION PROPERTY OF IBERESPACIO, S.A. AND SHALL BE EXCLUSIVELY USED FOR THE PROJECT AND OBJECT FOR IT WAS SUMINISTRATED. IT IS NOT AVAILABLE ITS DIFUSION A OTHERS FOR A DIFFERENT USE WITHOUT WRITE PERMISSION OF IBERESPACIO, S.A.

24/31

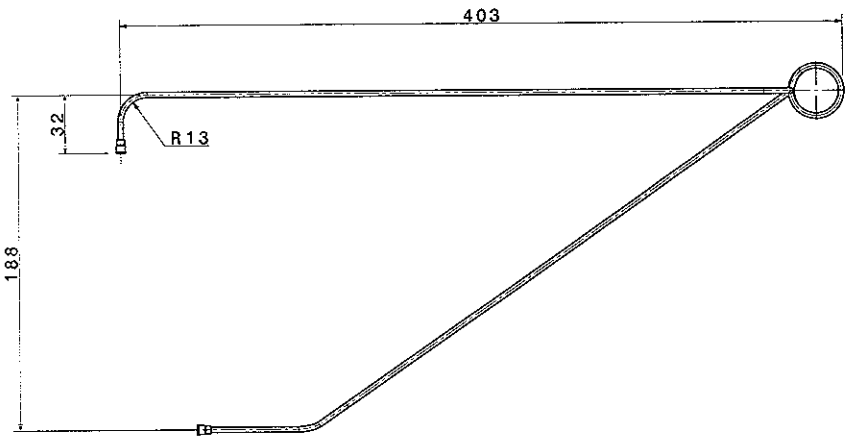

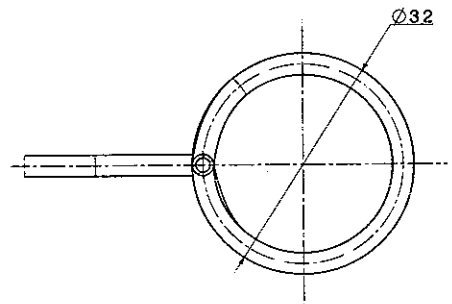

SECTION A-A
SCALE 2:1

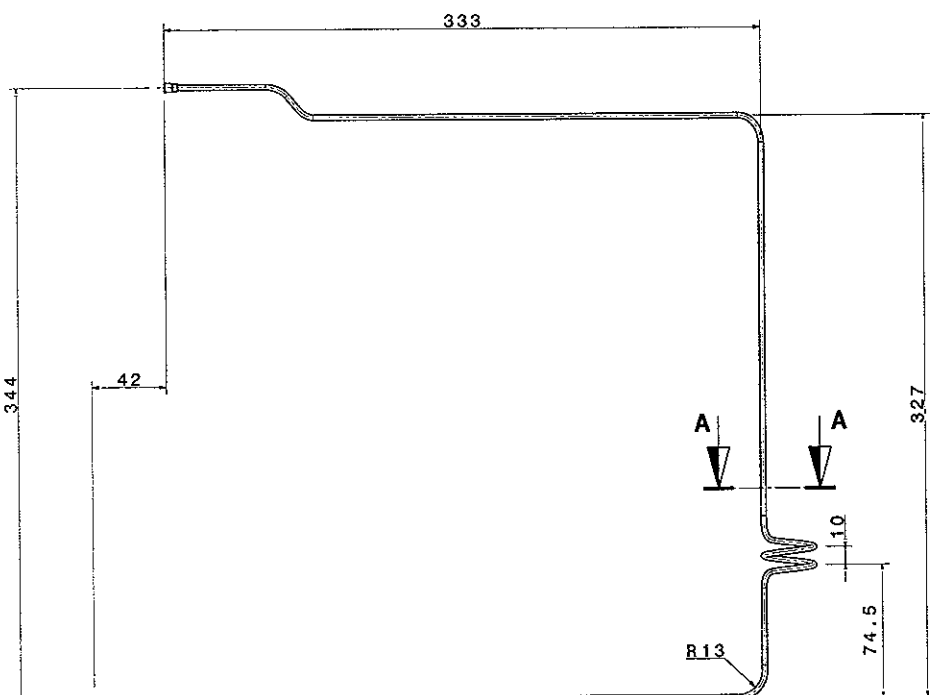

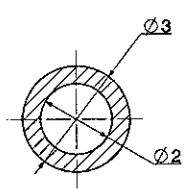

PIPE SECTION
SCALE 10:1

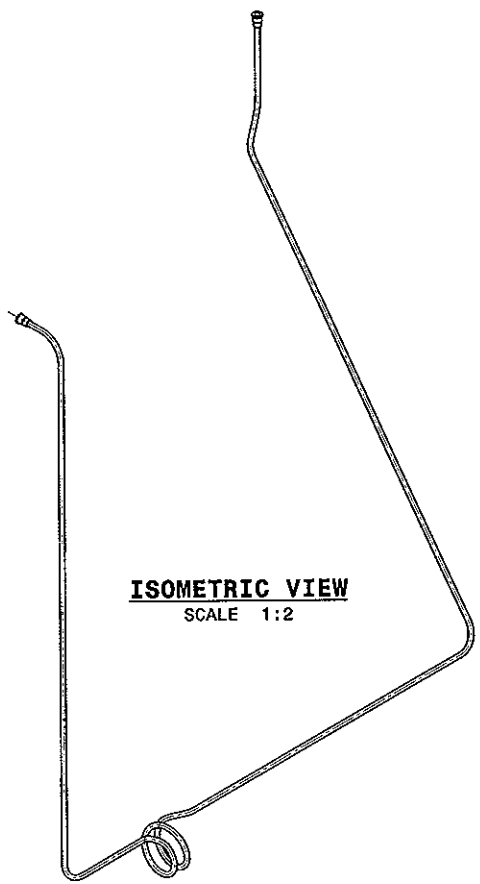

ISOMETRIC VIEW
SCALE 1:2

NOTES:

1. -MATERIALS BY STANDARD OF IBERESPACIO
2. -GENERAL TOLERANCE: H12-h12-Js16
3. -SURFACE TREATMENT: NONE.
4. -ALL DIMENSIONS ARE REFERENCE
5. -IN THE BENDING ZONE IT IS ALLOWED TO CHANGE CROSS-SECTION OF THE BODY UP ± 0,5 mm.

INFORMACION PROPIETARIA

ESTE DOCUMENTO CONTIENE INFORMACION DE INCRESPACIO S.A. Y DEBE SER USADO EXCLUSIVAMENTE PARA EL PROYECTO Y OBJETO PARA EL QUE HA SIDO SUMINISTRADO. NO ESTA PERMITIDA SU DIFUSION A TERCEROS PARA UN USO DISTINTO SIN LA AUTORIZACION DE INCRESPACIO S.A.

PROPERTY INFORMATION

THIS DOCUMENT HAVE INFORMATION PROPERTY OF IBERESPACIO, S.A. AND SHALL BE EXCLUSIVEMENT USED FOR THE PROJECT AND OBJECT FOR IT WAS SUMINISTRATED. IT IS NOT AVAILABLE ITS DIFUSION A OTHERS FOR A DIFFERENT USE WITHOUT WRITE PERMISSION OF INCRESPACIO. S.A.

			1 Edición
			1 Hoja

IberEspacio Tecnología Aeroespacial

	NOMBRE	FIRMA	FECHA
REALIZADO	EFZ		28-12-07
REVISADO	MFP		14-01-08
APROBADO	MGX		14-01-08

EDITADO PARA: INFORMATION

OTRA IDENTIFICACION:

PLANO Nº: CG022-D-1170-00

LIQUID LINE
ASSEMBLY DRAWING

Tamaño: A2 | Escala: 1:2 (Ref.) | Hoja: 1 de 1

3

NOTES:

1. -MATERIALS BY STANDARD OF IBERESPACIO
2. -GENERAL TOLERANCE: H12-h12-Js16
3. -SURFACE TREATMENT: NONE.
4. -ALL DIMENSIONS ARE REFERENCE
5. -IN THE BENDING ZONE IT IS ALLOWED TO CHANGE CROSS-SECTION OF THE BODY UP ± 0,5 mm.

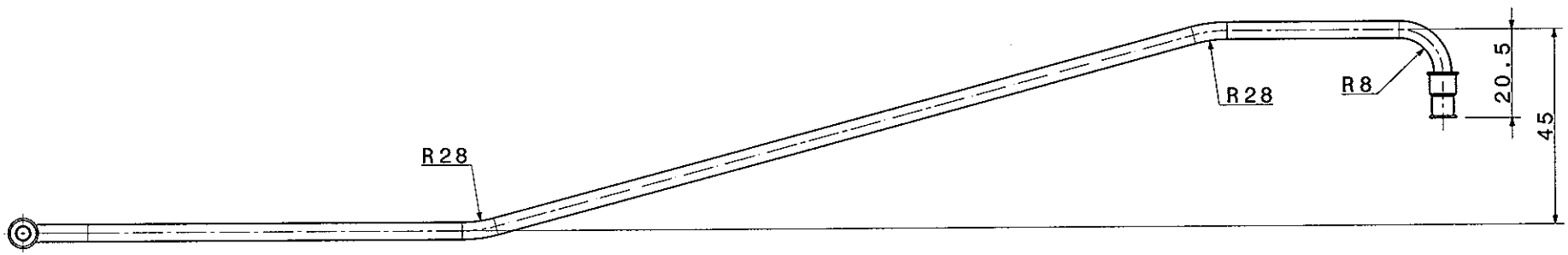

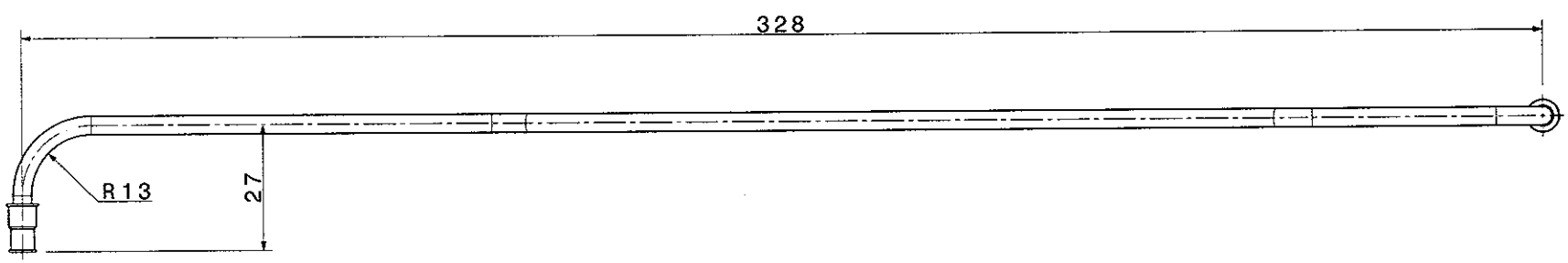

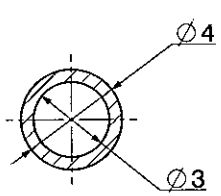

PIPE SECTION

SCALE 5:1

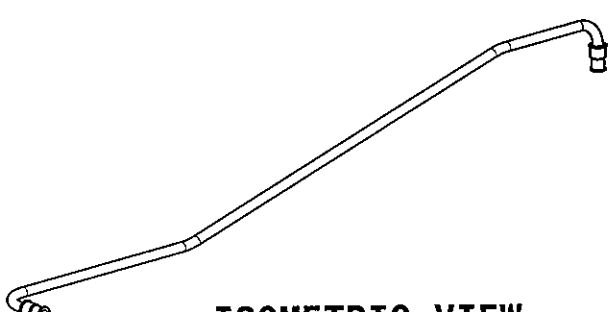

ISOMETRIC VIEW

SCALE 1:2

-	-	-	-	1	Edicion
-	-	-	-	1	Hoja

	NOMBRE	FIRMA	FECHA
REALIZADO	EFZ		28-12-07
REVISADO	MFP		14-01-08
APROBADO	MGX		14-01-08

EDITADO PARA: INFORMATION

IberEspacio
Tecnología Aeroespacial

OTRA IDENTIFICACION:

Plano Nº: CG022-D-1200-00

VAPOR LINE
ASSEMBLY DRAWING

Tamaño: A3 | Escala: 2:1; 1:1 | Hoja: 1 de 1

INFORMACION PROPIETARIA

ESTE DOCUMENTO CONTIENE INFORMACION DE IBERESPACIO S.A. Y DEBE SER USADO EXCLUSIVAMENTE PARA EL PROYECTO Y OBJETO PARA EL QUE HA SIDO SUMINISTRADO. NO ESTA PERMITIDA SU DIFUSION A TERCEROS PARA UN USO DISTINTO SIN LA AUTORIZACION DE IBERESPACIO S.A.

PROPERTY INFORMATION

THIS DOCUMENT HAVE INFORMATION PROPIETY OF IBERESPACIO, S.A. AND SHALL BE EXCLUSIVEMENT USED FOR THE PROJECT AND OBJECT FOR IT WAS SUMINISTRATED. IT IS NOT AVAILABLE ITS DIFUSION A OTHERS FOR A DIFERENT USE WITHOUT WRITE PERMISSION OF IBERESPACIO, S.A.

11 3301-F6

NOTES:

1. -MATERIALS BY STANDARD OF IBERESPACIO
2. -GENERAL TOLERANCE: H12-h12-Js16
3. -SURFACE TREATMENT: NONE.
4. -ALL DIMENSIONS ARE REFERENCE
5. -IN THE BENDING ZONE IT IS ALLOWED TO CHANGE CROSS-SECTION OF THE BODY UP ± 0,5 mm.

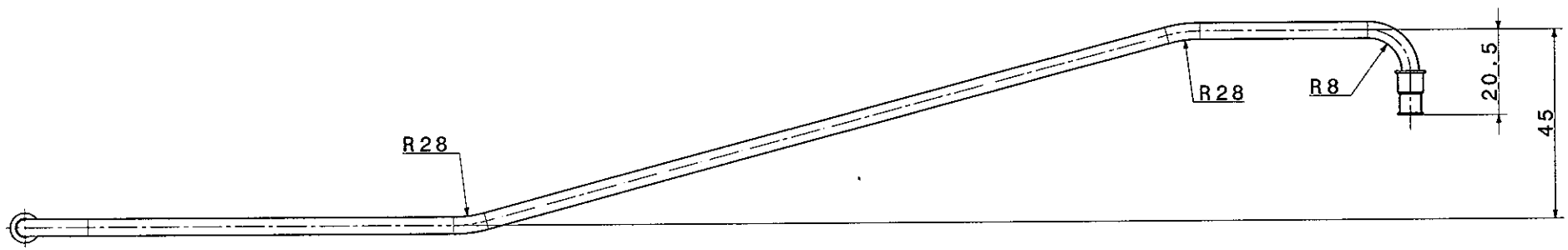

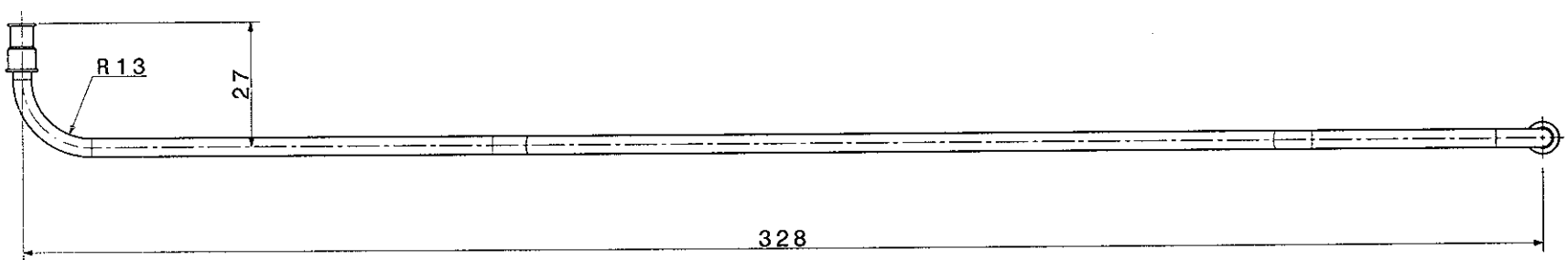

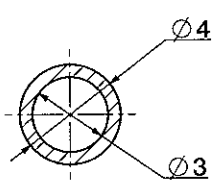

PIPE SECTION
SCALE 5:1

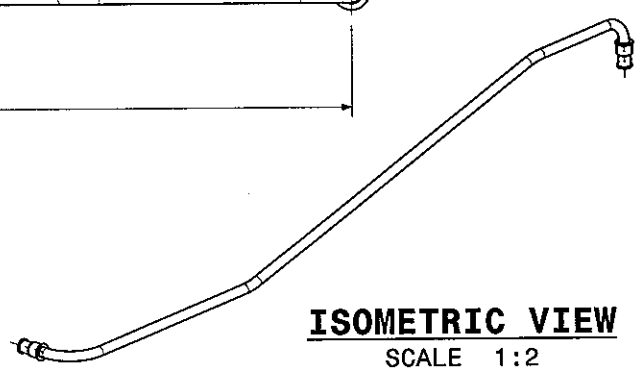

ISOMETRIC VIEW
SCALE 1:2

-	-	-	-	1	Edicion
-	-	-	-	i	Hoja

	NOMBRE	FIRMA	FECHA
REALIZADO	EFZ		28-12-07
REVISADO	MFP		14-01-08
APROBADO	MGX		14-01-08
EDITADO PARA:	INFORMATION		

IberEspacio
Tecnología Aeroespacial

OTRA IDENTIFICACION:

Plano Nº: CG022-D-1210-00

VAPOR LINE
ASSEMBLY DRAWING

Tamaño: A3 | Escala: 1:1, en: 1:2 | Hoja: 1 de 1

INFORMACION PROPIETARIA

ESTE DOCUMENTO CONTIENE INFORMACION DE IBERESPACIO S.A. Y DEBE SER USADO EXCLUSIVAMENTE PARA EL PROYECTO Y OBJETO PARA EL QUE HA SIDO SUMINISTRADO. NO ESTA PERMITIDA SU DIFUSION A TERCEROS PARA UN USO DISTINTO SIN LA AUTORIZACION DE IBERESPACIO S.A.

PROPERTY INFORMATION

THIS DOCUMENT HAVE INFORMATION PROPIETY OF IBERESPACIO, S.A. AND SHALL BE EXCLUSIVEMENT USED FOR THE PROJECT AND OBJECT FOR IT WAS SUMINISTRATED. IT IS NOT AVAILABLE ITS DIFUSION A OTHERS FOR A DIFERENT USE WITHOUT WRITE PERMISSION OF IBERESPACIO, S.A.

IT-330.-F6

27 31

NOTES:

1. -ASSEMBLY TOLERANCE ACCORDING TO Js16.
2. -* REFERENCE DIMENSION.
3. -SOLDERING PROCESSES ACCORDING TO IBER-ESPACIO METHOD.

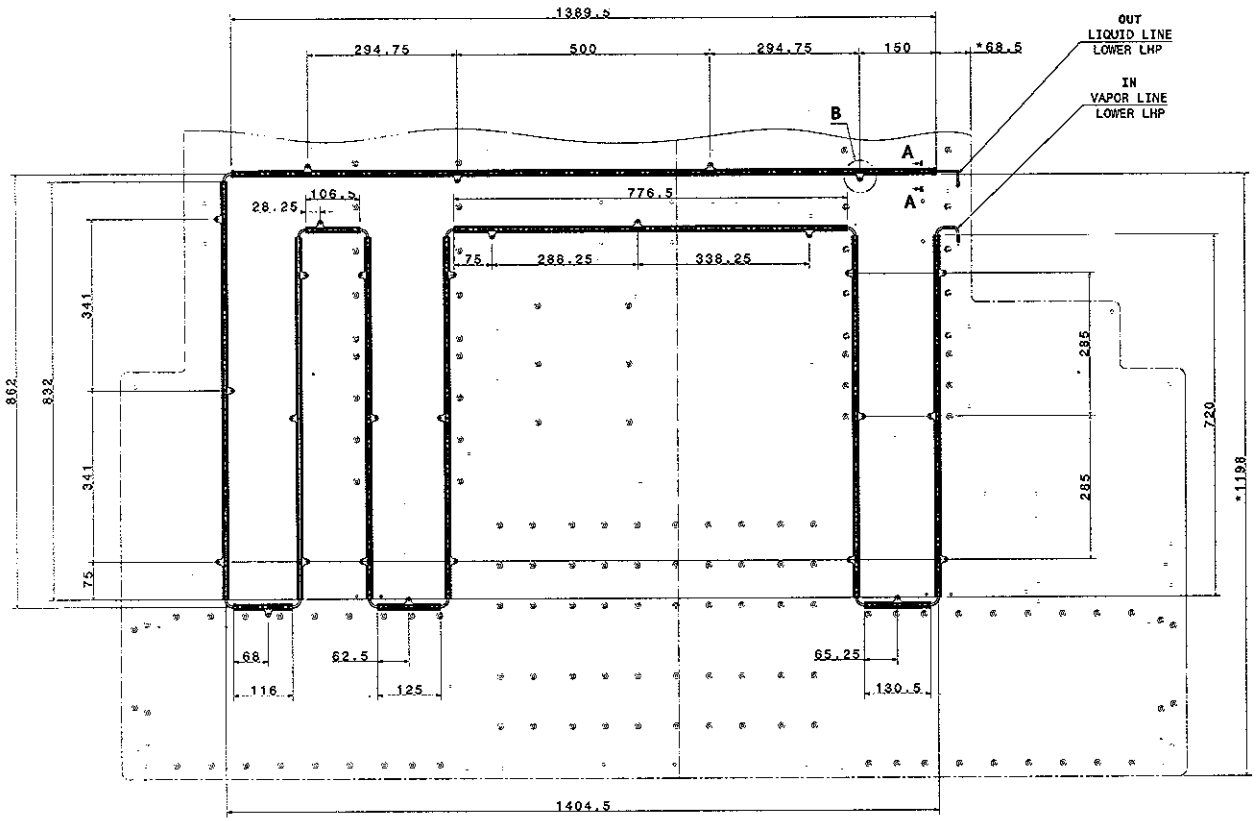

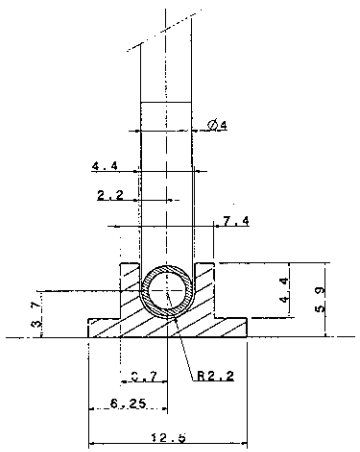

SECTION VIEW A-A
SCALE 5:1

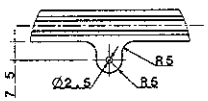

DETAIL B
SCALE 1:1

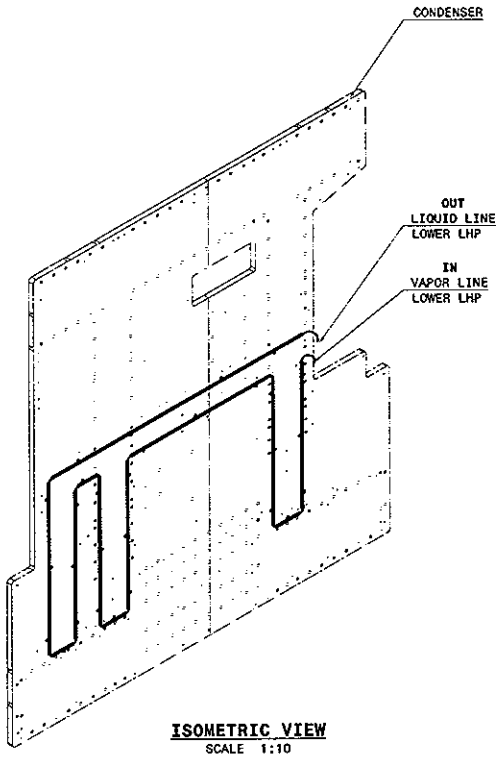

ISOMETRIC VIEW
SCALE 1:10

INFORMACION PROPIETARIA
ESTE DOCUMENTO CONTIENE INFORMACION DE IBERESPACIO S.A. Y NO DEBE SER COPIADO, REVELADO PARA EL PROPOSITO O EN ALGUNA FORMA EL USO DE ESTA INFORMACION, NO ESTA PERMITIDO SIN LA PUBLICACION O CONSENTIMIENTO PREVIO DE IBERESPACIO S.A.

PROPRIETARY INFORMATION
THIS DOCUMENT HAS INFORMATION PROPERTY OF IBERESPACIO, S.A. AND SHALL NOT DISCLOSED NOR USED FOR THE PURPOSE NOT SUBJECT THIS IT AND DISTRIBUTED. IT IS NOT AVAILABLE ITS COPIADO O REVELADO FOR A DIFFERENT USE WITHOUT WRITTEN PERMISSION OF IBERESPACIO, S.A.

	NOMBRE	FIRMA	FECHA
REALIZADO	EFZ		03-01-06
REVISADO	MFF		04-01-06
APROBADO	MDX		04-01-06

RELEASE FOR: INFORMATION

iberespacio Tecnologia Aeroespacial

CONDENSER
ASSEMBLY DRAWING

CG022-DI-1300-00

-	-	-	1	Initial release
-	-	-	1	REV A

NOTES:

1. -ASSEMBLY TOLERANCE ACCORDING TO Js18.
2. -* REFERENCE DIMENSION.
3. -SOLDERING PROCESSES ACCORDING TO IBER-ESPACIO METHOD.

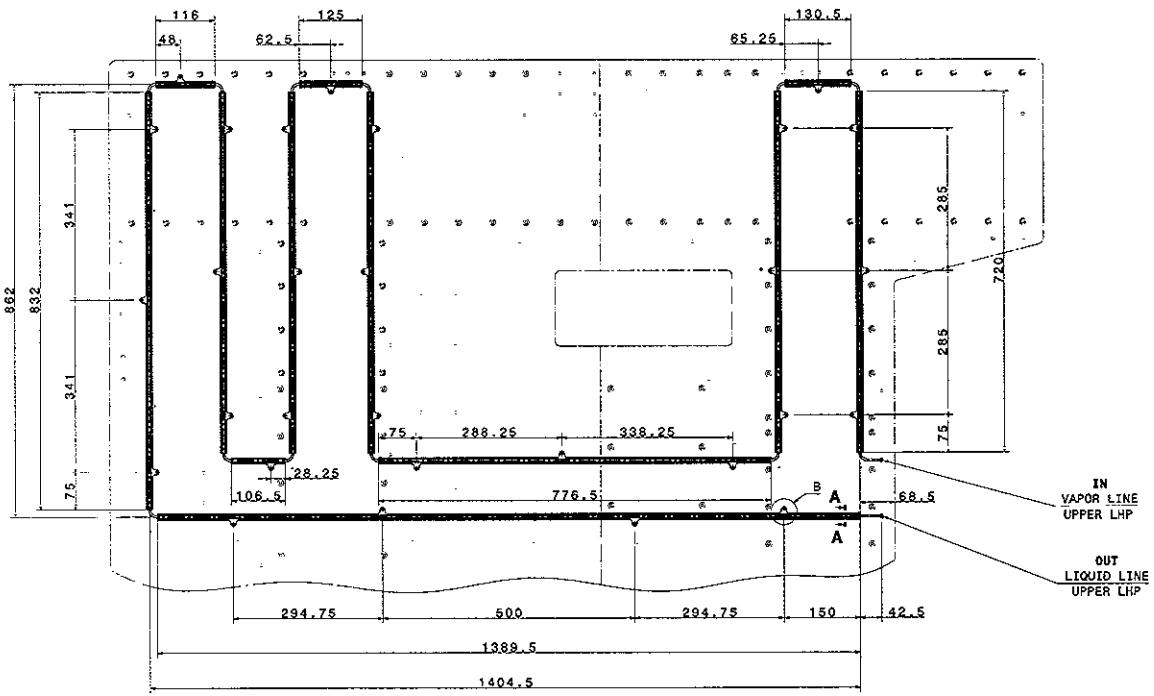

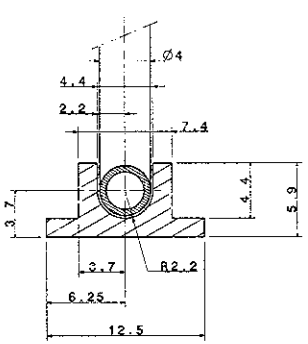

SECTION VIEW A-A
SCALE 5:1

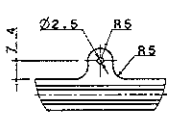

DETAIL B
SCALE 1:1

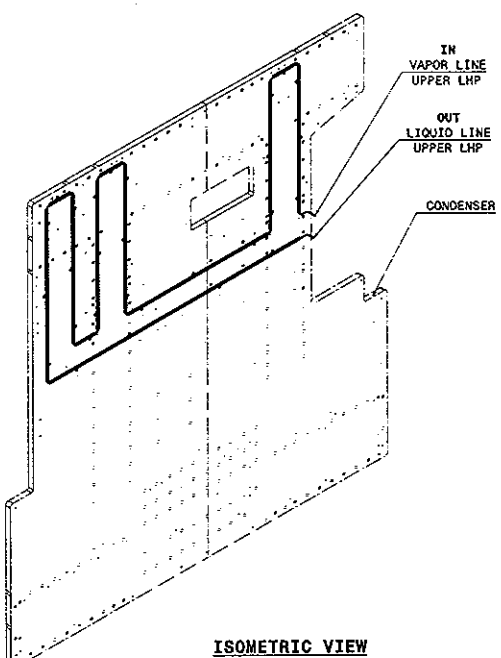

ISOMETRIC VIEW
SCALE 1:10

REALIZADO	EFZ		03-01-06
REVISADO	MFZ		14-01-06
APROBADO	MCZ		14-01-06

iberespacio

CONDENSER
ASSEMBLY DRAWING

CG022-DI-1310-00

INFORMACION PROPIETARIA

PROPERTY INFORMATION

NOTES:

1. -MATERIAL: ALUMINUM OR SIMILAR
2. -GENERAL TOLERANCE: H12-h12-Js12
3. -SURFACE TREATMENT: NONE.

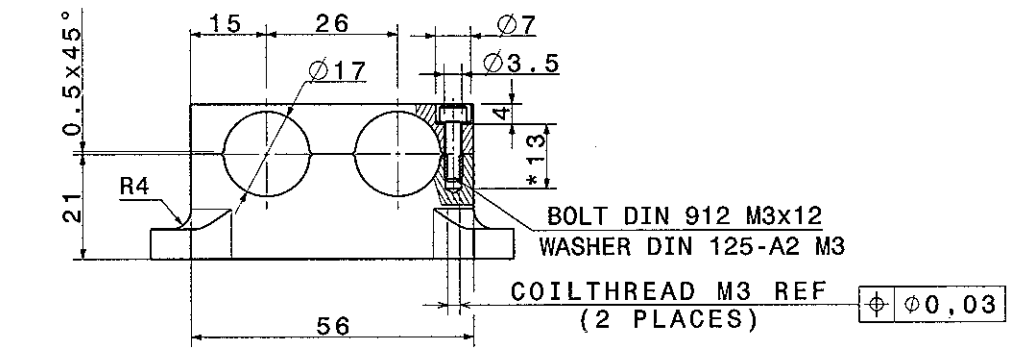

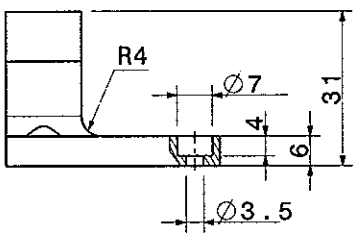

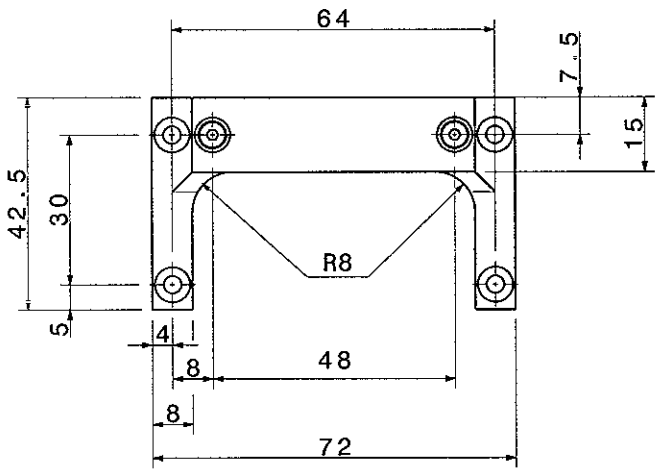

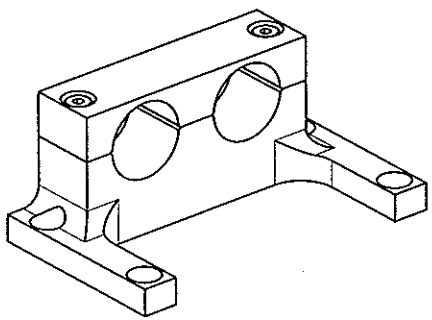

ISOMETRIC VIEW

SCALE 1:1

-	-	-	-	i	Edicion
-	-	-	-	1	Hoja

IberEspacio
Tecnología Aeroespacial

	NOMBRE	FIRMA	FECHA
REALIZADO	EFZ		03-01-08
REVISADO	MFP		14-01-08
APROBADO	MGX		14-01-08

EDITADO PARA: INFORMATION

OTRA IDENTIFICACION:

Plano Nº: CG022-D-1260-00

VALVE SUPPORT

Tamaño: A3 | Escala: 1:1 | Hoja: 1 de 1

INFORMACION PROPIETARIA

ESTE DOCUMENTO CONTIENE INFORMACION DE IBERESPACIO S.A. Y DEBE SER USADO EXCLUSIVAMENTE PARA EL PROYECTO Y OBJETO PARA EL QUE HA SIDO SUMINISTRADO. NO ESTA PERMITIDA SU DIFUSION A TERCEROS PARA UN USO DISTINTO SIN LA AUTORIZACION DE IBERESPACIO S.A.

PROPERTY INFORMATION

THIS DOCUMENT HAVE INFORMATION PROPIETY OF IBERESPACIO, S.A. AND SHALL BE EXCLUSIVEMENT USED FOR THE PROJECT AND OBJECT FOR IT WAS SUMINISTRATED. IT IS NOT AVAILABLE ITS DIFUSION A OTHERS FOR A DIFERENT USE WITHOUT WRITE PERMISSION OF IBERESPACIO, S.A.

IT 3301 F6

30 31

NOTES:

1. -MATERIAL: DELRIN OR SIMILAR
2. -GENERAL TOLERANCE: H12-h12-Js12
3. -SURFACE TREATMENT: NONE.

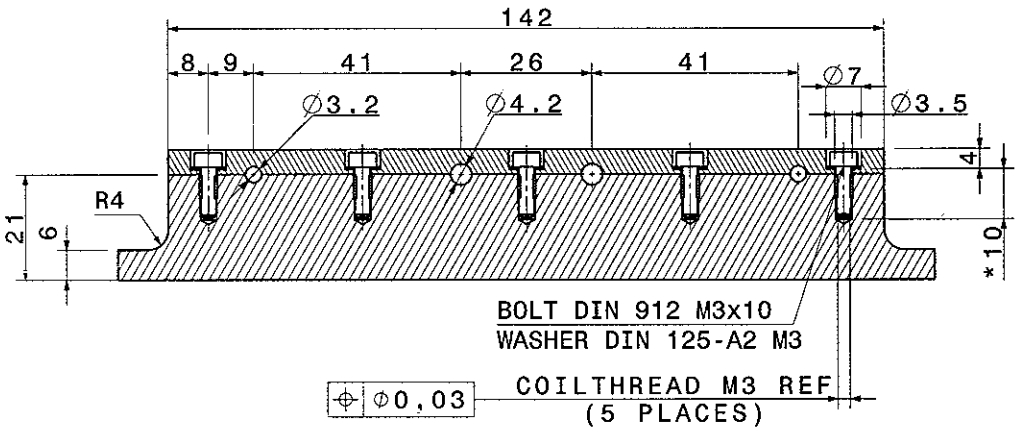

SECTION VIEW A-A

SCALE 1:1

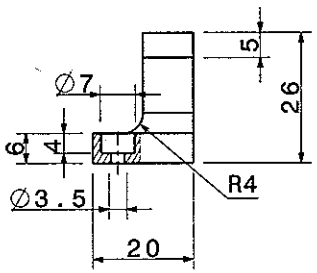

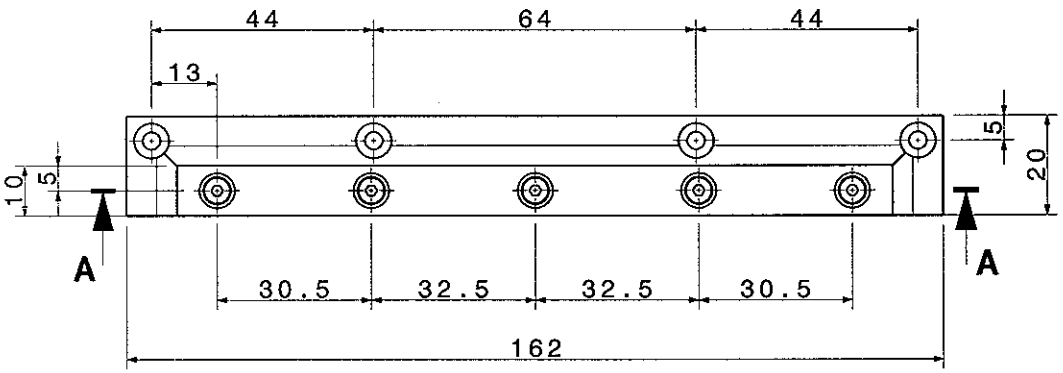

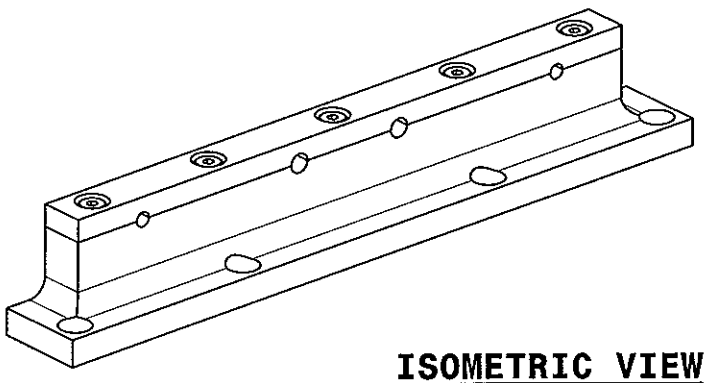

ISOMETRIC VIEW

SCALE 1:1

-	-	-	-	1	Edicion
-	-	-	-	1	Hoja

IberEspacio
Tecnología Aeroespacial

	NOMBRE	FIRMA	FECHA
REALIZADO	EFZ		03-01-08
REVISADO	MFP		14-01-08
APROBADO	MGX		14-01-08

EDITADO PARA: INFORMATION

OTRA IDENTIFICACION:

Plano nº: CG022-D-1350-00

TRANSPORT LINES SUPPORT

Tamaño: A3 | Escala: 1:1 | Hoja: 1 de 1

INFORMACION PROPIETARIA

ESTE DOCUMENTO CONTIENE INFORMACION DE IBERESPACIO S.A. Y DEBE SER USADO EXCLUSIVAMENTE PARA EL PROYECTO Y OBJETO PARA EL QUE HA SIDO SUMINISTRADO. NO ESTA PERMITIDA SU DIFUSION A TERCEROS PARA UN USO DISTINTO SIN LA AUTORIZACION DE IBERESPACIO S.A.

PROPERTY INFORMATION

THIS DOCUMENT HAVE INFORMATION PROPIETY OF IBERESPACIO, S.A. AND SHALL BE EXCLUSIVEMENT USED FOR THE PROJECT AND OBJECT FOR IT WAS SUMINISTRATED. IT IS NOT AVAILABLE ITS DIFUSION A OTHERS FOR A DIFERENT USE WITHOUT WRITE PERMISSION OF IBERESPACIO, S.A.

IT 3301 F6