ORIGINALE ARCHIVIO

CARLO GAVAZZI SPACE SpA

AMS02 - TCS

Tipo Doc.: *Doc.Type:*	TECHNICAL NOTE			N° DRD: *DRD N°:*	DEL 072
N° Doc.: *Doc. N°:*	**AMSTCS-IC-CGS-001**	Ediz.: *Issue:* **1**	Data: *Date:* **31/03/2008**	Pagina *Page* **1**	Di *Of* **27**
Titolo : *Title :*	CAB TCS ICD				

	Nome & Funzione *Name & Function*	Firma *Signature*	Data *Date*
Preparato da: *Prepared by:*	A. Franzoso (DT/MT)		31/03/2008
Approvato da: *Approved by:*	M. Molina (DT/MT)	Molina	31-3-08
	C. Vettore (DT/MT)	Vettore	31-3-2008
	L. Cremonesi (PA/QA)	L. Cremonesi	31.03.08
	C. Cinquepalmi (PA/CC)	C. Cinquepalmi	31.03.08
Applicazione autorizzata da: *Application authorized by:*	M. Olivier (PM)	M. Olivier	31-03-08
Customer / Higher Level Contractor			
Accettato da: *Accepted by:*			
Approvato da: *Approved by*			

LISTA DI DISTRIBUZIONE *DISTRIBUTION LIST*	N	A	I
Interna / *Internal*			
Esterna / *External*			
E. Russo (ASI)			x

N=Numero di copie A=Applicazione I=Informazione
N=Number of copy A=Application I=Information

Gestione documenti: *Data Management:* Firma / *Signature* Data / *Date* 31/03/08

File: AMSTCS-IC-CGS-001_Issue 1.doc

Questo documento contiene informazioni di proprietà di CARLO GAVAZZI SPACE SpA: Tutti i diritti sono riservati
All information contained in this document are property of CARLO GAVAZZI SPACE SpA. All right reserved.

REGISTRAZIONE DELLE MODIFICHE / *CHANGE RECORD*

EDIZIONE *ISSUE*	DATA *DATE*	AUTORIZZAZIONE *CHANGE AUTHORITY*	OGGETTO DELLA MODIFICA E SEZIONI AFFETTE *REASON FOR CHANGE AND AFFECTED SECTIONS*
1	31/03/2008		First Issue

Questo documento contiene informazioni di proprietà di CARLO GAVAZZI SPACE SpA: Tutti i diritti sono riservati
All information contained in this document are property of CARLO GAVAZZI SPACE SpA. All right reserved.

LISTA DELLE PAGINE VALIDE / *LIST OF VALID PAGES*

PAGINA *PAGE*	EDIZIONE *ISSUE*	PAGINA *PAGE*	EDIZIONE *ISSUE*	PAGINA *PAGE*	EDIZIONE *ISSUE*	PAGINA *PAGE*	EDIZIONE *ISSUE*	PAGINA *PAGE*	EDIZIONE *ISSUE*
1 - 27	1								

Questo documento contiene informazioni di proprietà di CARLO GAVAZZI SPACE SpA: Tutti i diritti sono riservati
All information contained in this document are property of CARLO GAVAZZI SPACE SpA. All right reserved.

TABLE OF CONTENT

1. SCOPE **6**

2. APPLICABLE AND REFERENCE DOCUMENTS **6**

2.1 APPLICABLE DOCUMENTS 6
2.2 REFERENCE DOCUMENTS 7

3. MECHANICAL INTERFACES **8**

3.1 LHP EVAPORATORS TO CAB 8
3.2 LHP CONDENSER TO WAKE RADIATOR 13
3.3 HP TO CAB 17
3.4 HP TO USS 19
3.5 TAPE ON CAB 20
3.6 CAB TO USS (FILLER) 20
3.7 HEATERS TO CAB 20
3.8 CAB LHP START-UP HEATERS CONNECTOR BRACKET 21
3.9 CAB SWITCH ON HEATERS CONNECTOR BRACKET 22

4. THERMAL INTERFACES **24**

4.1 CONDUCTIVE INTERFACES 24
4.1.1 LHP EVAPORATORS TO CAB 24
4.1.2 LHP CONDENSER TO WAKE RADIATOR 24
4.1.3 HP TO CAB 24
4.1.4 HP TO USS 24
4.1.5 CAB TO USS (FILLER) 24
4.2 RADIATIVE INTERFACES 25

5. ELECTRICAL INTERFACES **26**

5.1 LHP STARTUP HEATERS 26
5.2 CAB SWITCH ON HEATERS 26

Questo documento contiene informazioni di proprietà di CARLO GAVAZZI SPACE SpA: Tutti i diritti sono riservati
All information contained in this document are property of CARLO GAVAZZI SPACE SpA. All right reserved.

LIST OF TABLES

Tab. 3-1: CAB TCS mechanical interfaces 8
Tab. 5-1: LHP startup heaters connector pin function 26
Tab. 5-2: CAB switch on heaters connector pin function 27

LIST OF FIGURES

Fig. 3-1: Evaporators holes location on CAB side (highlighted by red circles) 9
Fig. 3-2: Evaporators holes block interfaces 10
Fig. 3-3: Evaporator saddle isometric view (not to scale)and holes section 11
Fig. 3-4: Valve support isometric view and typical holes section 11
Fig. 3-5: Transport lines isometric view and typical holes section 11
Fig. 3-6: Evaporators holes assignment 12
Fig. 3-7: General layout of upper and lower condenser line on the wake radiator 14
Fig. 3-8: Detail of upper condenser saddle assembly on the wake radiator 15
Fig. 3-9: Detail of lower condenser saddle assembly on the wake radaitor 16
Fig. 3-10: section and view of the saddle, and ear for riveting 16
Fig. 3-11: Wake (at left) and Port (at right) interfaces of the Heat Pipes on CAB 17
Fig. 3-12: Port side holes location for Heat Pipes on CAB 18
Fig. 3-13: Wake side holes location for Heat Pipes on CAB 18
Fig. 3-14: HP retainer on USS to provide HP additional retention methods 19
Fig. 3-15: HP retainer on USS: holes utilization 20
Fig. 3-16: Heater Location on port side (approximate location) 21
Fig. 3-17: Heater Location on Zenith side (approximate location) 21
Fig. 3-18: Location of connector bracket on the wake radiator for CAB LHP startup heaters 22
Fig. 3-19: Thermostats (8 inserts M3x6, in green circle) and connector bracket (2 of 3 inserts, M5x10, red arrows) location on CAB 23
Fig. 3-20: Connector bracket (3rd of 3 inserts, M5x10, red arrow) location on CAB 23
Fig. 5-1: CAB LHP startup heaters contacts layout 26
Fig. 5-2: CAB switch on heaters contacts layout 26

Questo documento contiene informazioni di proprietà di CARLO GAVAZZI SPACE SpA: Tutti i diritti sono riservati
All information contained in this document are property of CARLO GAVAZZI SPACE SpA. All right reserved.

1. SCOPE

This document provides the description of the mechanical, thermal and electrical interfaces of the AMS CAB Thermal Control System (TCS).

This document corresponds to contract deliverable DEL 072

2. APPLICABLE AND REFERENCE DOCUMENTS

Documents here below identified are applicable and/or reference for the activities described in the present document and are considered part of it to the extent specified herein.

2.1 APPLICABLE DOCUMENTS

CONTRACTUAL

AD1 Capitolato generale ASI, available on http://www.asi.it/html/norme/cap_gen.pdf

AD2 Richiesta d'offerta per Programma AMS, attività di Fase C/D – Prot. ASI 006194 – 25/07/2007

AD2bis CapitolatoTecnico "Progetto: AMS Attività di fase C/D" Doc N DC-IPC-2007-062

AD3 Tailoring di primo livello delle norme ECSS, serie M-E-Q – Progetto AMS attività di fase C/D- Doc. n° DC-IPC-2007-063 Rev. A

MANAGEMENT

AD4 "ECSS Glossary" – Doc. ECSS-P-001 Rev. B

PRODUCT ASSURANCE

AD5 "Product Assurance Requirements - Progetto AMS attività di fase C/D "-Doc. n° DC-IPC-2007-064 Rev A

AD6 "Istruzione Operativa "Norme per la redazione del Piano di Assicurazione del Prodotto (PA Plan)", Doc OP-IPC-2005-008

AD7 "Sistemi di Gestione per la Qualità", doc UNI EN ISO 9001:2000

AD8 "Quality Management Plan for the Alpha Magnetic Spectrometer 02 (AMS-02) Experiment", Doc JSC63164, Basic Version, 09/21/2005

AD9 "Master Verification Plan (MVP)", Doc. JSC 29788, Iss Draft, 8/21/2006

AD10 "PA REQUIREMENTS DC-IPC-2007-064 RevA Conformity",doc AMSCD-RQ-CGS-001 issue 1

Questo documento contiene informazioni di proprietà di CARLO GAVAZZI SPACE SpA: Tutti i diritti sono riservati
All information contained in this document are property of CARLO GAVAZZI SPACE SpA. All right reserved.

ENGINEERING AND TECHNICAL

AD11 "Multi-Layer Insulation for the Alpha Magnetic Spectrometer Guidelines", Doc. CTSD-SH-1782, 9/30/2005

AD12 "AMS-02 Structural Verification Plan for the Space Transportation System and the International Space Station", Doc JSC28792, Iss.D, March 2005

AD13 "Experiment/Payload Integration Hardware Interfaces - Part I", Doc JSC29095, Iss.A, 06/01/2002

AD14 "Experiment/Payload Integration Hardware Interfaces - Part II", Doc. JSC29095, Iss.A, August 2004

AD15 "Experiment/Vacuum Case Payload Integration Hardware Interface", Doc JSC29202, Iss.C, March 2005

AD16 "AMS-02 Thermal Control Requirements", Doc AMS-RQ-CGS-001, Iss.1, April 2007

AD17 "Attached Payload Interface Requirements Document , Doc. SSP 57003, Iss. B, 17/06/03

AD18 "Attached Payload Hardware Interface Control Document, Doc. SSP 57004, Iss B, 13/06/03

AD19 "AMSPDS-RP-CGS-001", Doc. PDS Design Description, Iss.2, July 05

AD20 "AmsE-PPL", AMS Electronics Preferred Parts List, available on (http://ams.cern.ch/AMS/Electronics/Parts/), Iss.1, Nov 01 configured on doc PDS-LI-CGS-006 iss 1

2.2 REFERENCE DOCUMENTS

[RD 1] Phase II Flight Safety Data Package for the Alpha Magnetic Spectrometer - 02 (AMS-02) Version Basic JSC49978 , 2006

[RD 2] Alpha Magnetic Spectrometer – 02 Assembly and Testing Integration Plan, Version A, JSC63123, 28-11-2005

[RD 3] Dichiarazione INFN sulla consegna di componenti – lettera del 20 maggio 2007 (prot. ASI n. 0009869)

[RD 4] Capitolato gestionale ASI OP-IPC-2005-010-E

[RD 5] AMSTCS-TN-CGS-010 iss1, CAB TCS Design Report, 31/03/2008

[RD 6] AMSTCS-TN-CGS-009, issue 1, CAB TCS Thermal Analysis Report, 31/03/2008.

Questo documento contiene informazioni di proprietà di CARLO GAVAZZI SPACE SpA: Tutti i diritti sono riservati
All information contained in this document are property of CARLO GAVAZZI SPACE SpA. All right reserved.

3. MECHANICAL INTERFACES

As described in RD5, the CAB TCS is composed of several mechanical parts interfacing different parts of the AMS-02 experiment

The complete list is given below, and the interfaces shall be detailed in the following sections.

Element	Interfacing to
LHP evaporator	CAB
LHP condenser	Wake radiator
Straight Heat Pipes	CAB
Bent Heat Pipes	USS
Tape	CAB
Filler	Between CAB & USS
CAB Heaters	CAB
LHP startup heaters connector bracket	Wake radiator
CAB Heaters Connector Bracket	CAB

Tab. 3-1: CAB TCS mechanical interfaces

3.1 LHP EVAPORATORS TO CAB

The two LHP Evaporators assemblies are bolted to the CAB starboard facing side, by means of bolts.

The evaporator block assembly interfaces are composed of the following items:

- 2 evaporator saddles
- 1 valve support
- 1 transport lines support

Evaporators footprint and hole pattern is the same for both evaporators.

Holes pattern is reported in the following figure; in total, 26 inserts M3x6 are provided on the CAB side.

Questo documento contiene informazioni di proprietà di CARLO GAVAZZI SPACE SpA: Tutti i diritti sono riservati
All information contained in this document are property of CARLO GAVAZZI SPACE SpA. All right reserved.

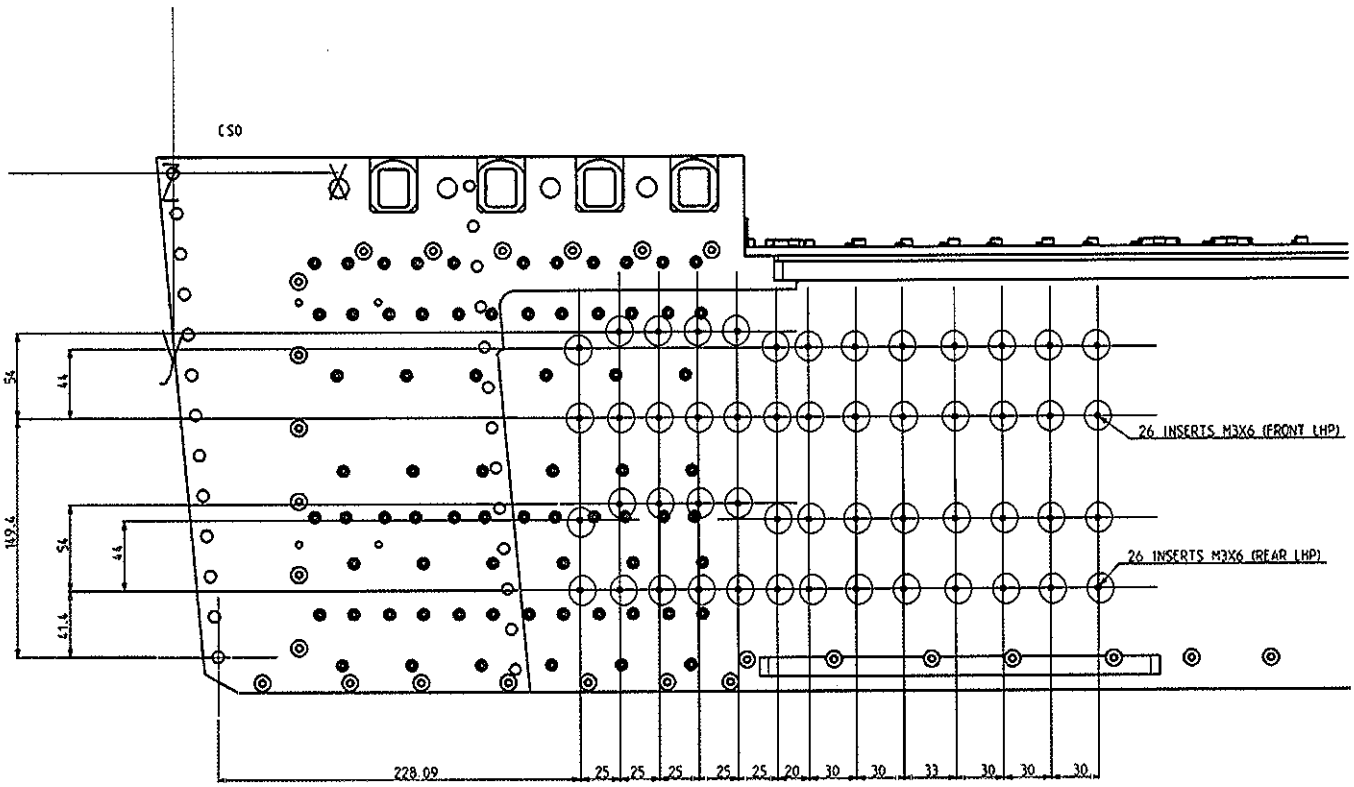

Fig. 3-1: Evaporators holes location on CAB side (highlighted by red circles)

The evaporator aluminum saddle shall use the first 16 bolts; the valves support structure shall make use of 4 holes (2 on the upper set, 2 on the lower set), while the transport lines support shall be attached to 4 holes (2 on the upper set, 2 on the lower set).

Questo documento contiene informazioni di proprietà di CARLO GAVAZZI SPACE SpA: Tutti i diritti sono riservati
All information contained in this document are property of CARLO GAVAZZI SPACE SpA. All right reserved.

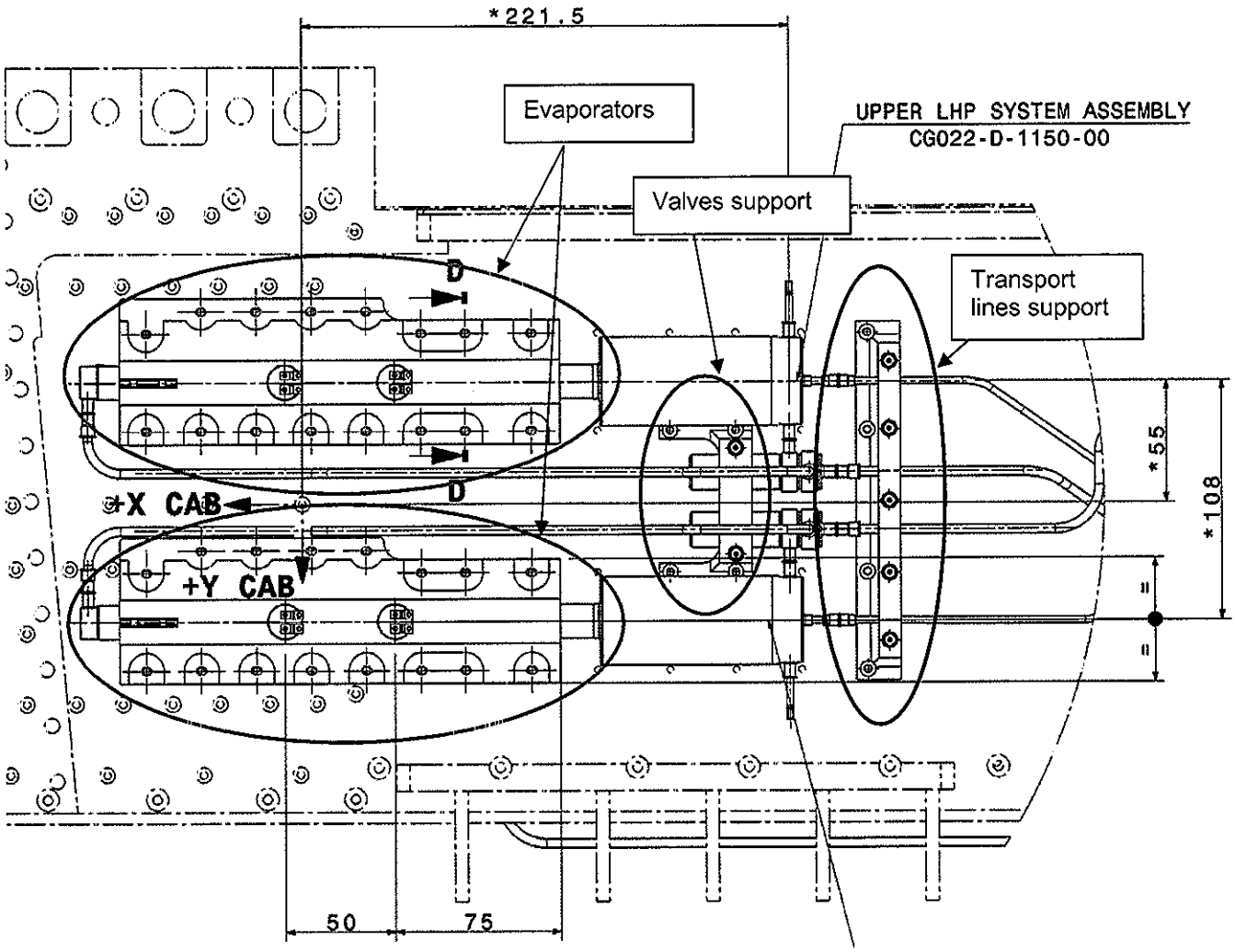

Fig. 3-2: Evaporators holes block interfaces.

Drawings of the Evaporators saddles, lines support and valve support are provided in RD5, annex 1. Isometric views are reported here for sake of clarity.

Questo documento contiene informazioni di proprietà di CARLO GAVAZZI SPACE SpA: Tutti i diritti sono riservati
All information contained in this document are property of CARLO GAVAZZI SPACE SpA. All right reserved.

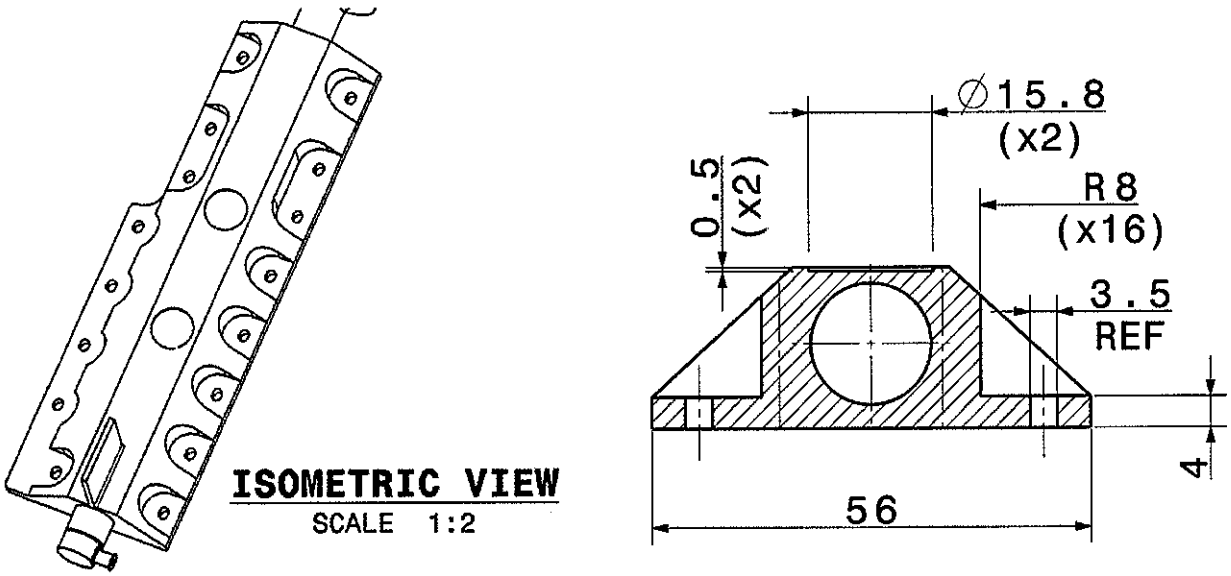

Fig. 3-3: Evaporator saddle isometric view (not to scale)and holes section.

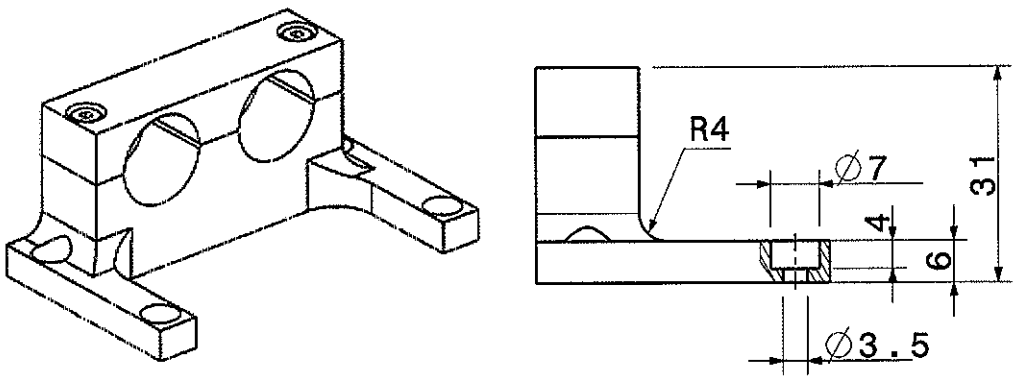

Fig. 3-4: Valve support isometric view and typical holes section

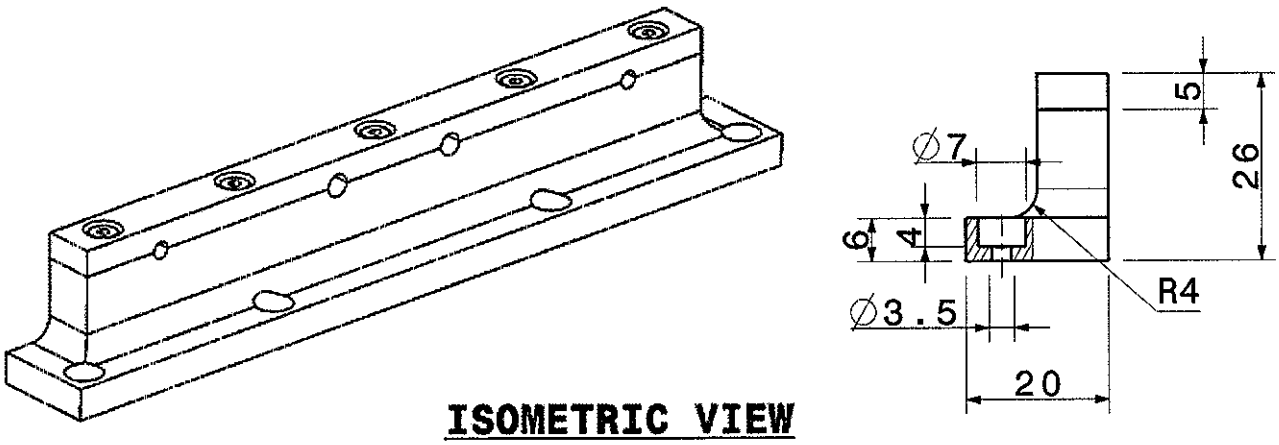

Fig. 3-5: Transport lines isometric view and typical holes section.

Questo documento contiene informazioni di proprietà di CARLO GAVAZZI SPACE SpA: Tutti i diritti sono riservati
All information contained in this document are property of CARLO GAVAZZI SPACE SpA. All right reserved.

The reserved holes are reported in the following figure, with the following color code:
Green circles: evaporators
Red circles: valve support
Blue circles: transport lines support

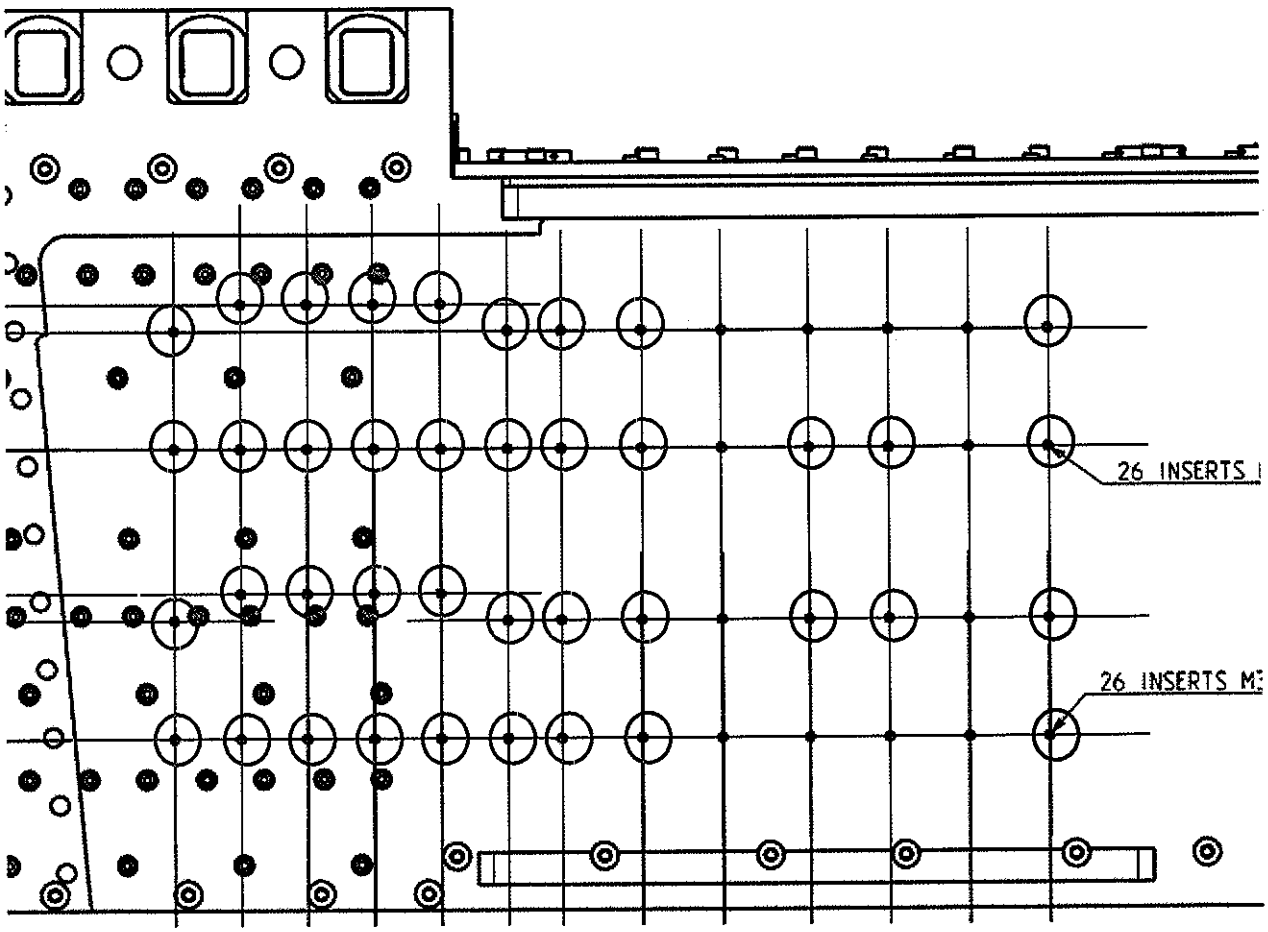

Fig 3-6: Evaporators holes assignment

The material of the evaporator saddle below the bolt is 4mm thick (seeFig. 3-3)
The material of the valve support below the bolt is 2mm thick(see Fig 3-4)
The material of the transport lines support below the bolt is 2mm thick (see Fig. 3-5)
The M3 bolts and washers shall be chosen accordingly.

In between all these evaporator block items and the CAB a thermal filler pad shall be inserted, type CHOTHERM 1671, 0.38mm thick, according to the footprint (with cutouts in correspondence of the bolt holes.

Questo documento contiene informazioni di proprietà di CARLO GAVAZZI SPACE SpA: Tutti i diritti sono riservati
All information contained in this document are property of CARLO GAVAZZI SPACE SpA. All right reserved.

3.2 LHP CONDENSER TO WAKE RADIATOR

The two condenser lines are brazed to two aluminum saddle assemblies.

Each aluminum saddle assembly is made of different length saddles sections, provided with ears in order to allow riveting on the wake radiator

The Saddle system shall be glued on the wake radiator, and then riveted. The material thickness of the saddle to be riveted is 1.5mm (see figure Fig. 3-10 in next pages).

The glue to be used shall be:

- Thermally conductive (at least 0.8W/m/K)
- Shall cure at ambient temperature, within 1 day.
- Shall have a temperature working range encompassing the limits
- Shall have low-outgassing properties: <1% TML, <0.1% CVCM
- Shall be suitable for Al-Al bonding
- Its CTE shall be suitable for the application

The drawings of the condenser saddles are provided in RD5, annex1.
They are reported here for sake of clarity

Questo documento contiene informazioni di proprietà di CARLO GAVAZZI SPACE SpA: Tutti i diritti sono riservati
All information contained in this document are property of CARLO GAVAZZI SPACE SpA. All right reserved.

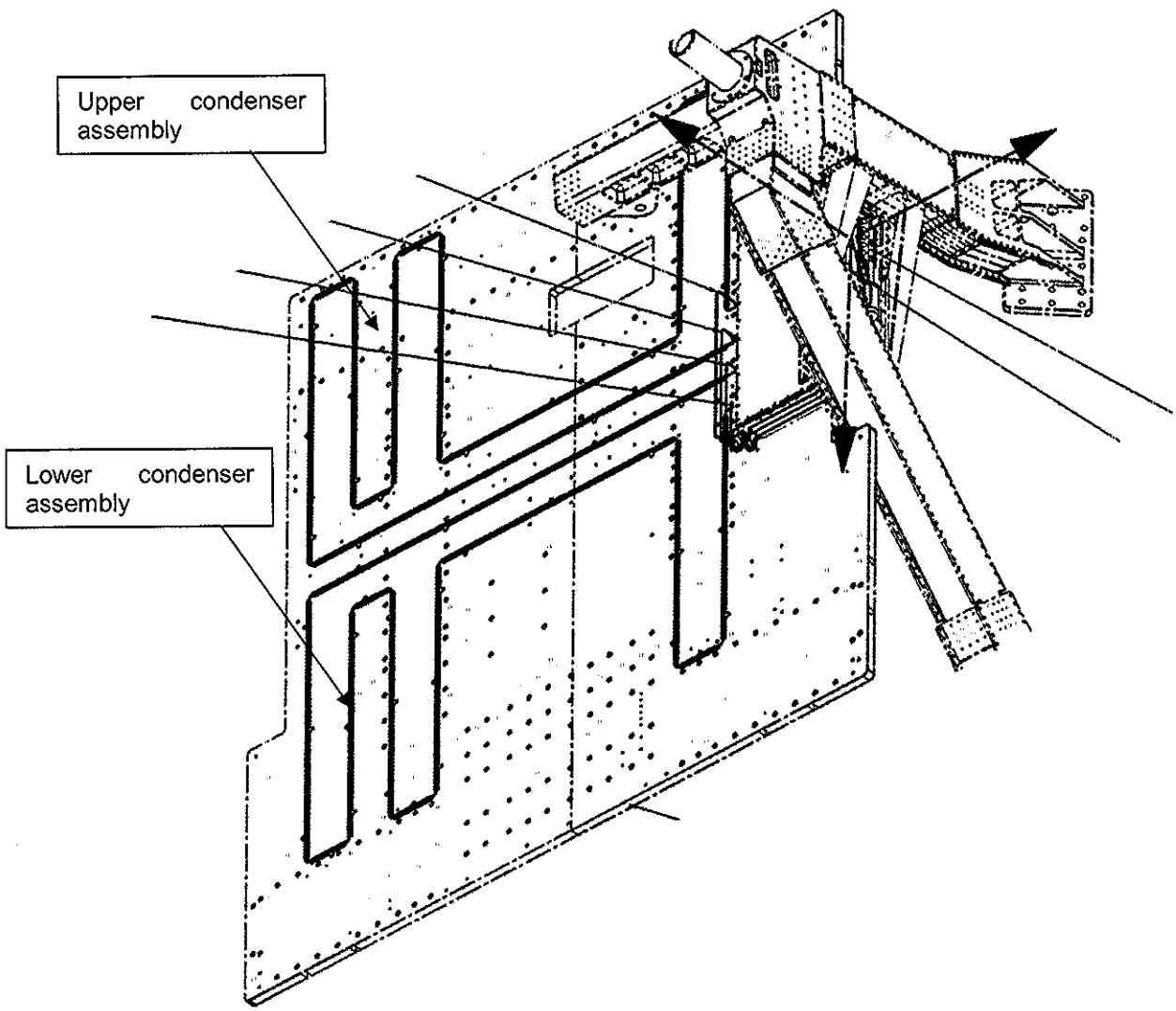

Fig. 3-7: General layout of upper and lower condenser line on the wake radiator

Questo documento contiene informazioni di proprietà di CARLO GAVAZZI SPACE SpA: Tutti i diritti sono riservati
All information contained in this document are property of CARLO GAVAZZI SPACE SpA. All right reserved.

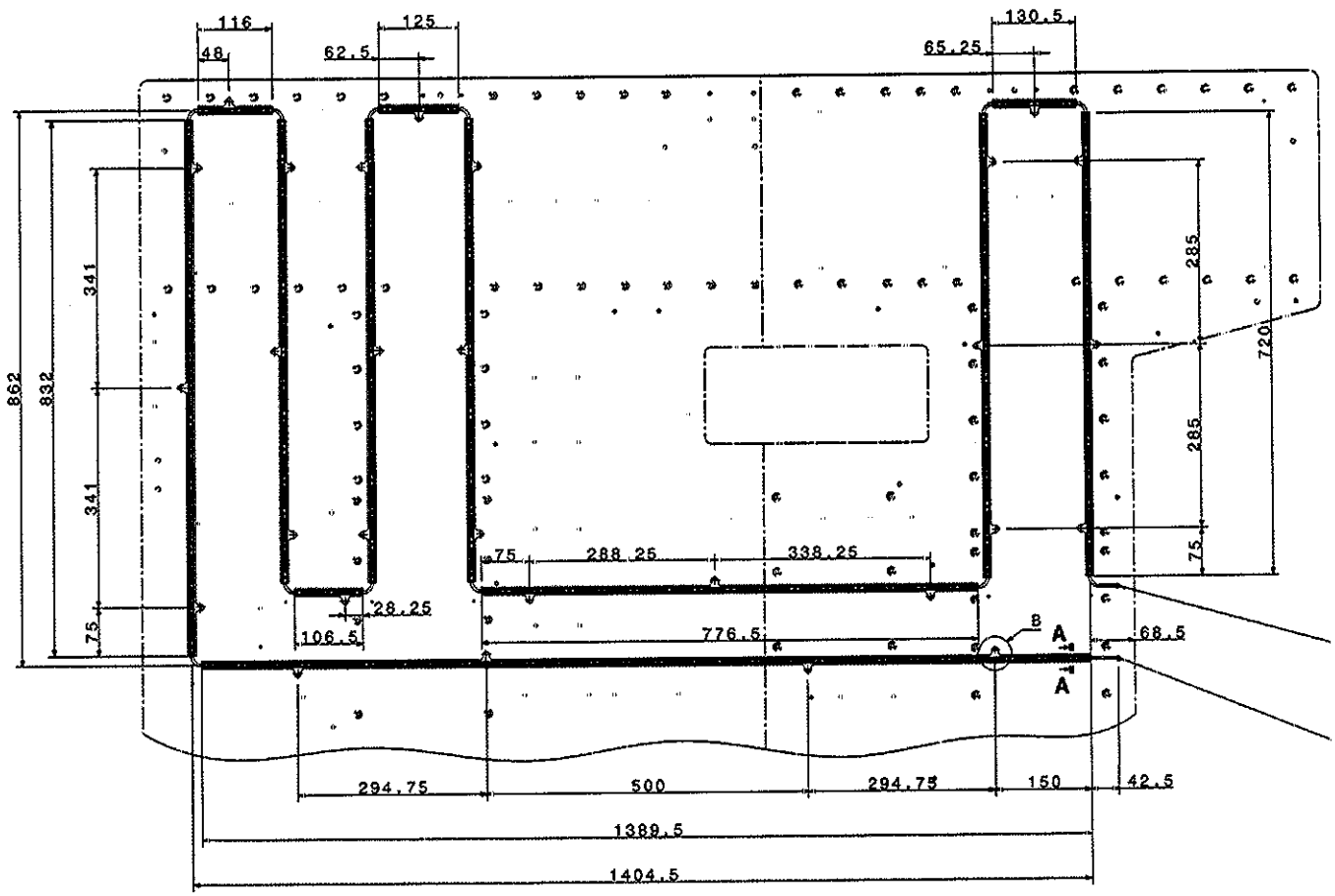

Fig. 3-8: Detail of upper condenser saddle assembly on the wake radiator

Questo documento contiene informazioni di proprietà di CARLO GAVAZZI SPACE SpA: Tutti i diritti sono riservati
All information contained in this document are property of CARLO GAVAZZI SPACE SpA. All right reserved.

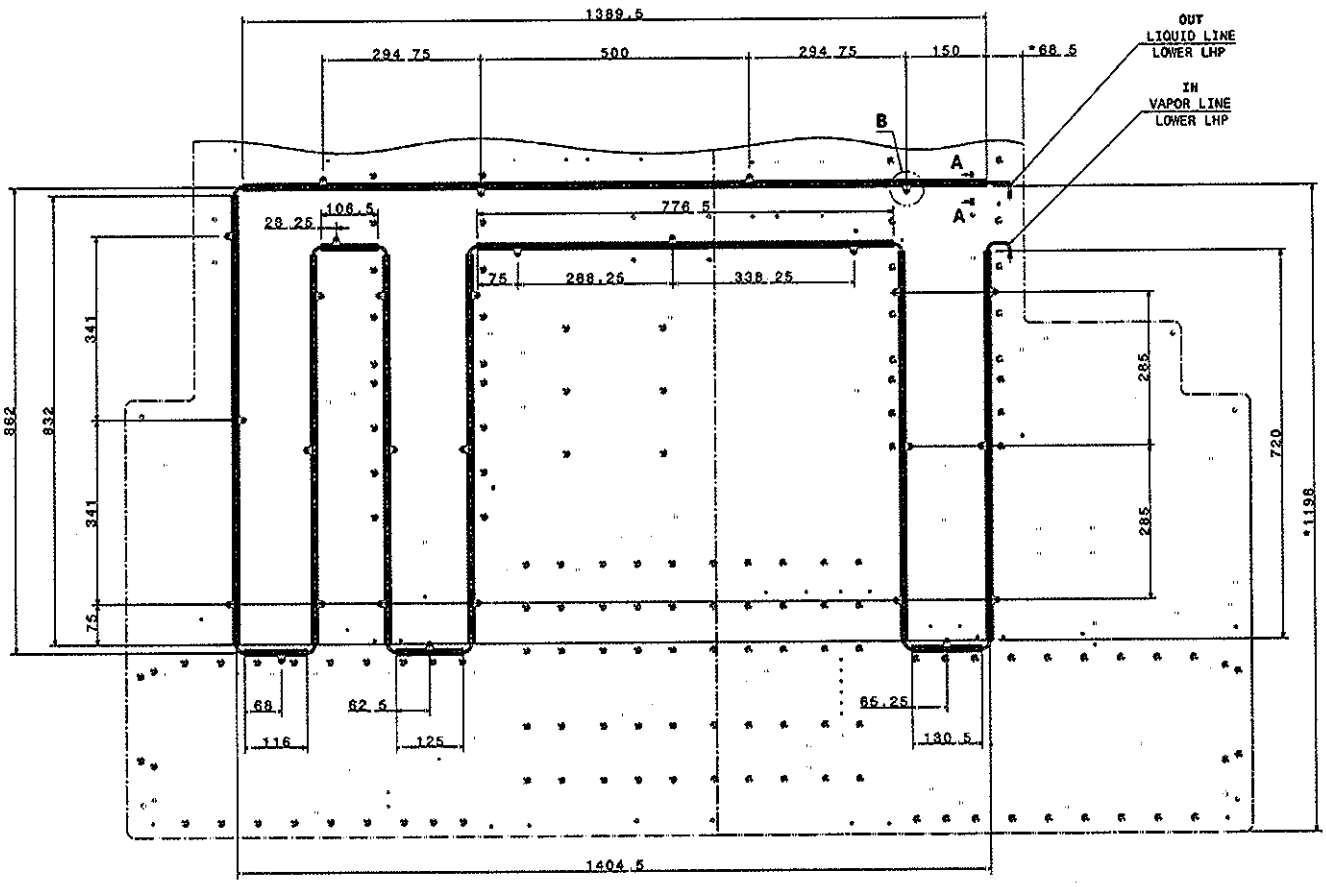

Fig. 3-9: Detail of lower condenser saddle assembly on the wake radaitor

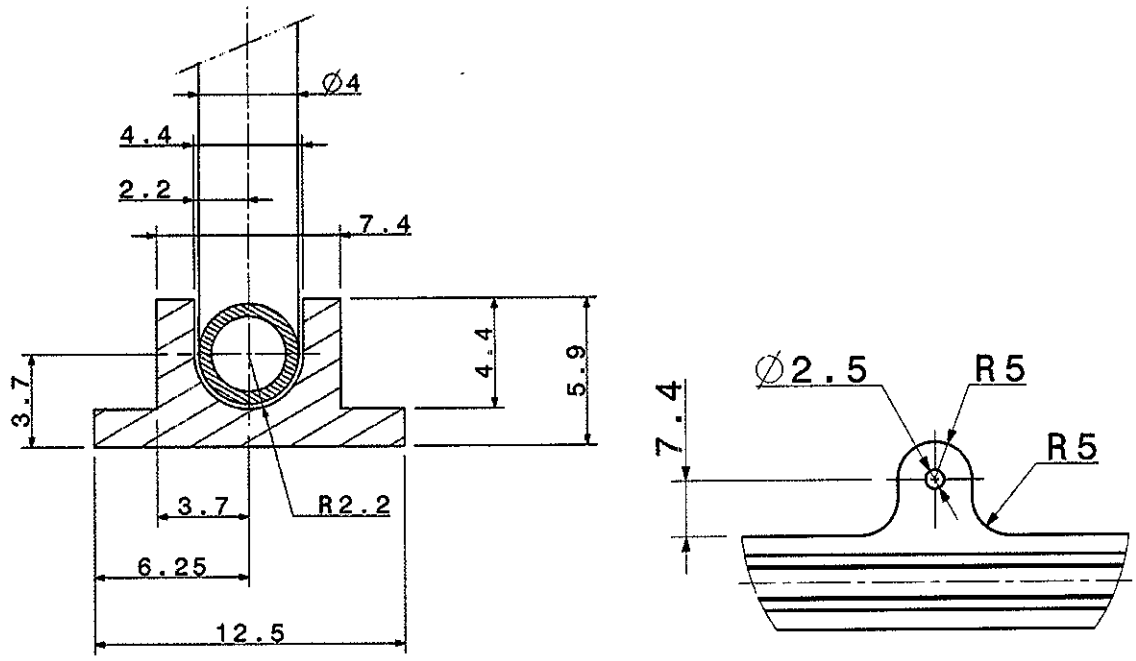

Fig. 3-10: section and view of the saddle, and ear for riveting.

Questo documento contiene informazioni di proprietà di CARLO GAVAZZI SPACE SpA: Tutti i diritti sono riservati
All information contained in this document are property of CARLO GAVAZZI SPACE SpA. All right reserved.

3.3 HP TO CAB

2 Heat pipes are connected on the CAB port and wake sides, with an identical footprint.

The location of the interface is shown in the following figures:

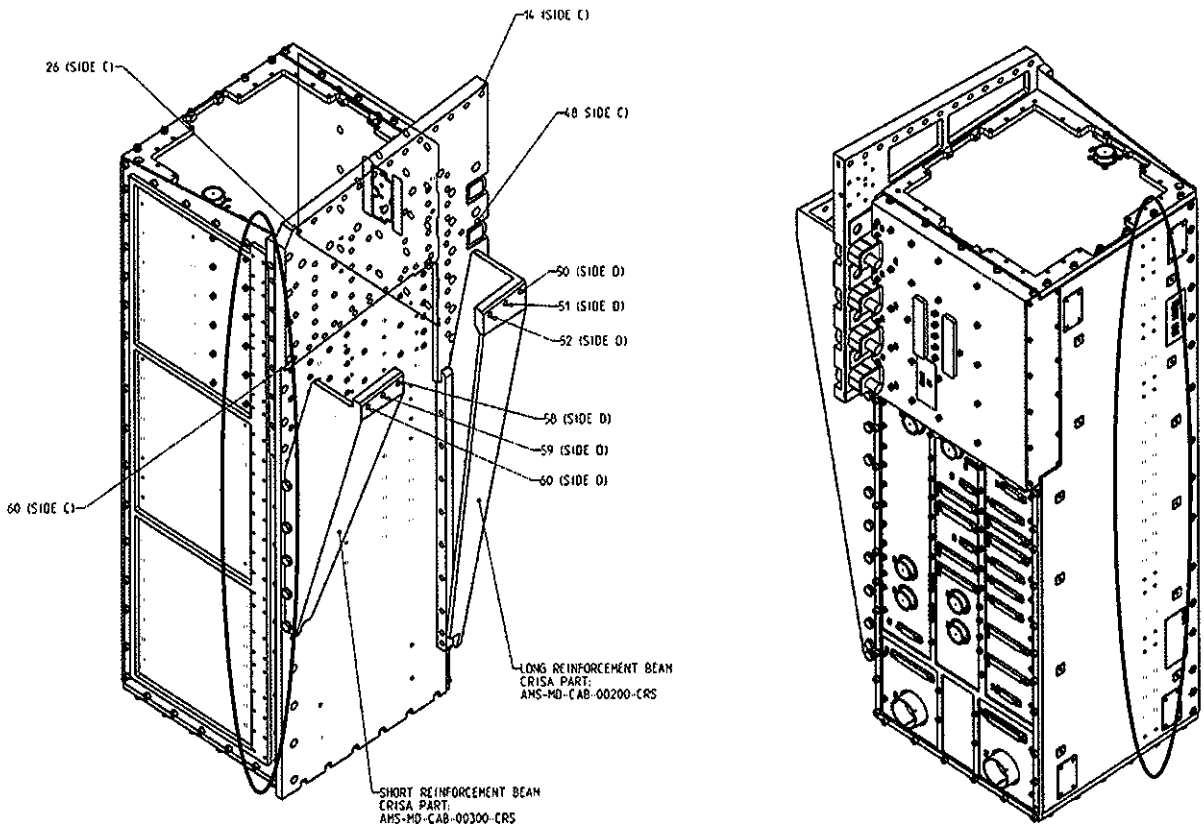

Fig. 3-11: Wake (at left) and Port (at right) interfaces of the Heat Pipes on CAB

Each heat pipe is bolted with 2 rows of 26 bolts M3 each (52 bolts total per HP), not equally spaced.
The M3x4.5 inserts location is shown in the next figures:

Questo documento contiene informazioni di proprietà di CARLO GAVAZZI SPACE SpA: Tutti i diritti sono riservati
All information contained in this document are property of CARLO GAVAZZI SPACE SpA. All right reserved.

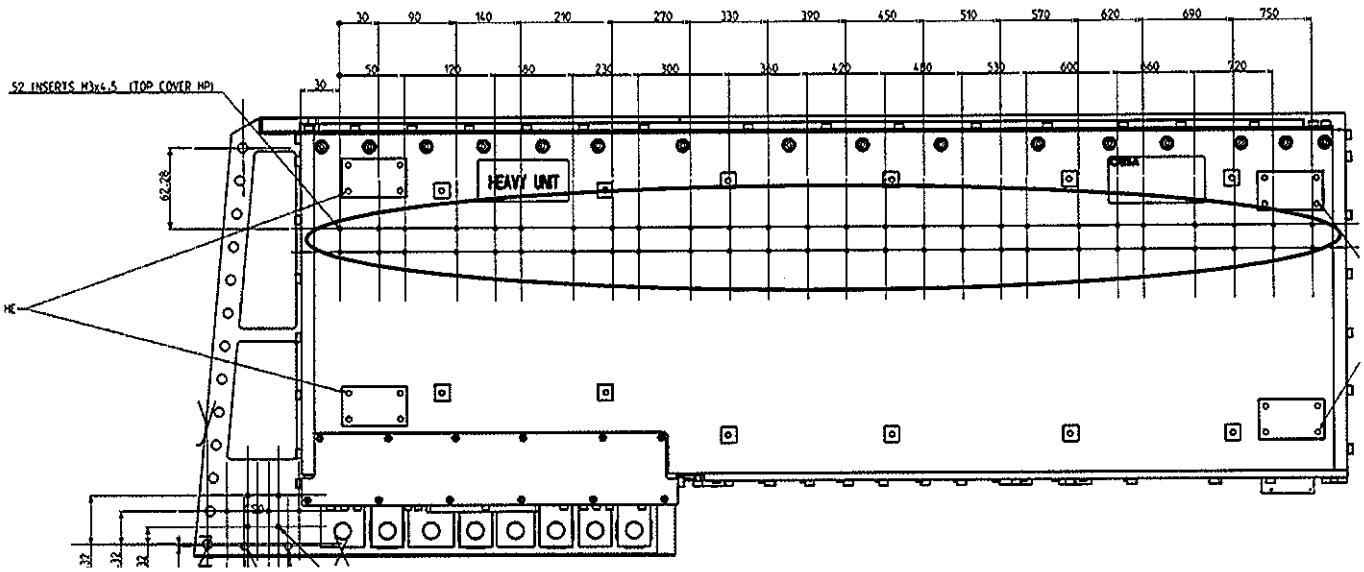

Fig. 3-12: Port side holes location for Heat Pipes on CAB

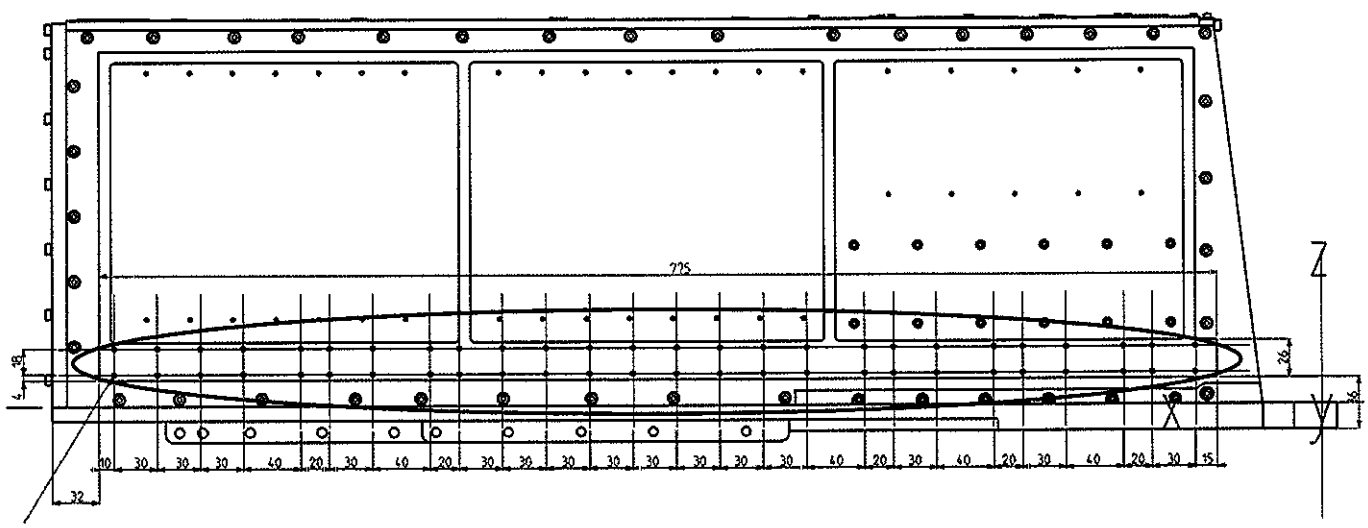

Fig. 3-13: Wake side holes location for Heat Pipes on CAB

A cho-therm interfiller type 1671, 0.38mm thick, shall be put in between the HP and the CAB sides.

Questo documento contiene informazioni di proprietà di CARLO GAVAZZI SPACE SpA: Tutti i diritti sono riservati
All information contained in this document are property of CARLO GAVAZZI SPACE SpA. All right reserved.

3.4 HP TO USS

3 bent Heat Pipes are glued to the USS beams by use of a glue with the following properties:

- Thermally conductive (at least 0.8W/m/K)
- Shall cure at ambient temperature, within 1 day.
- Shall have a temperature working range encompassing the limits
- Shall have low-outgassing properties: <1% TML, <0 1% CVCM
- Shall be suitable for Al-Al bonding
- Its CTE shall be suitable for the application

A bracket (HP retainer) shall provide an additional retention method.

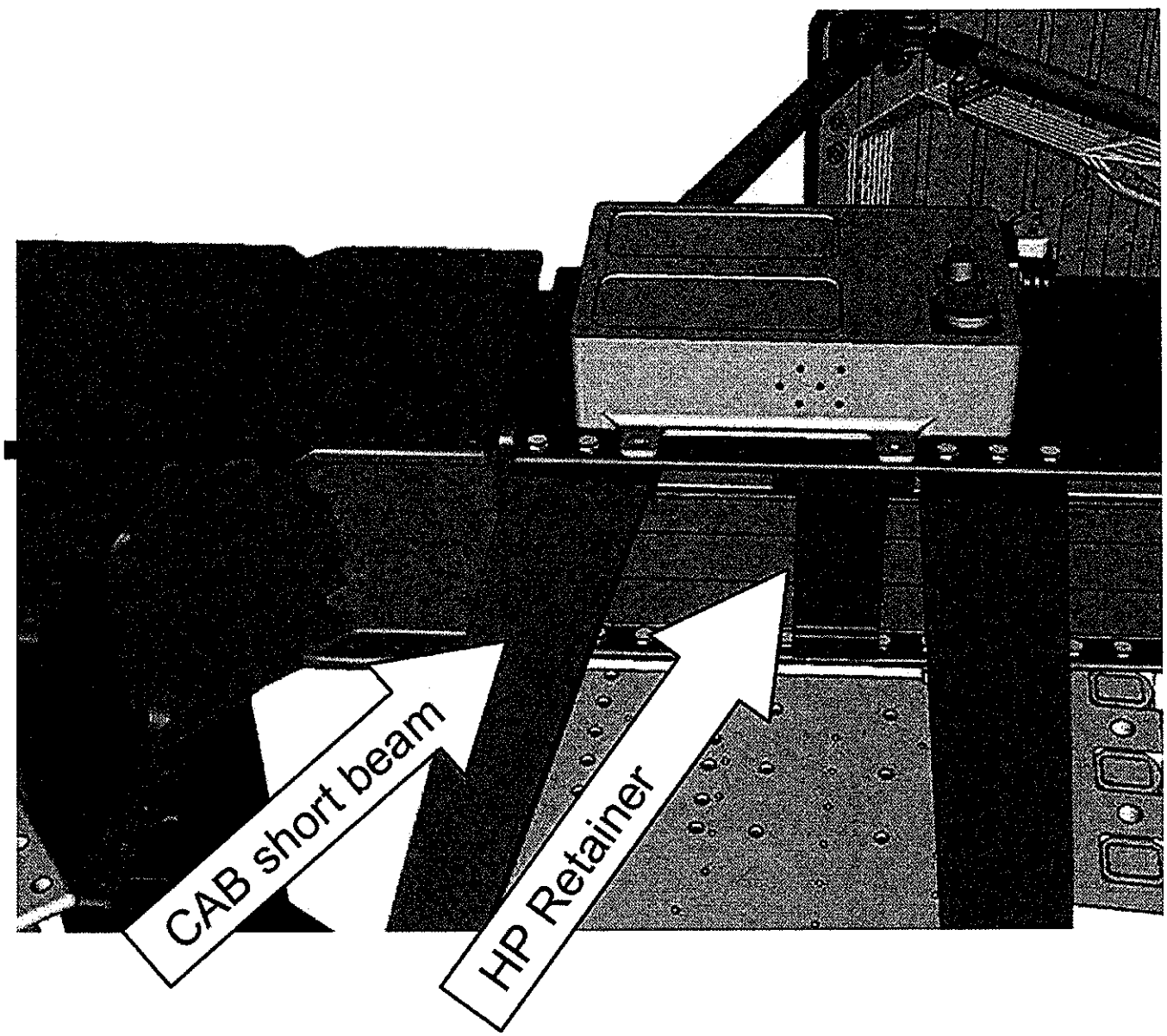

Fig. 3-14: HP retainer on USS to provide HP additional retention methods

Questo documento contiene informazioni di proprietà di CARLO GAVAZZI SPACE SpA: Tutti i diritti sono riservati
All information contained in this document are property of CARLO GAVAZZI SPACE SpA. All right reserved.

The bracket shall make use of the following holes on the USS:

- C53, C54 and C55,
- D53, D54 and D55,

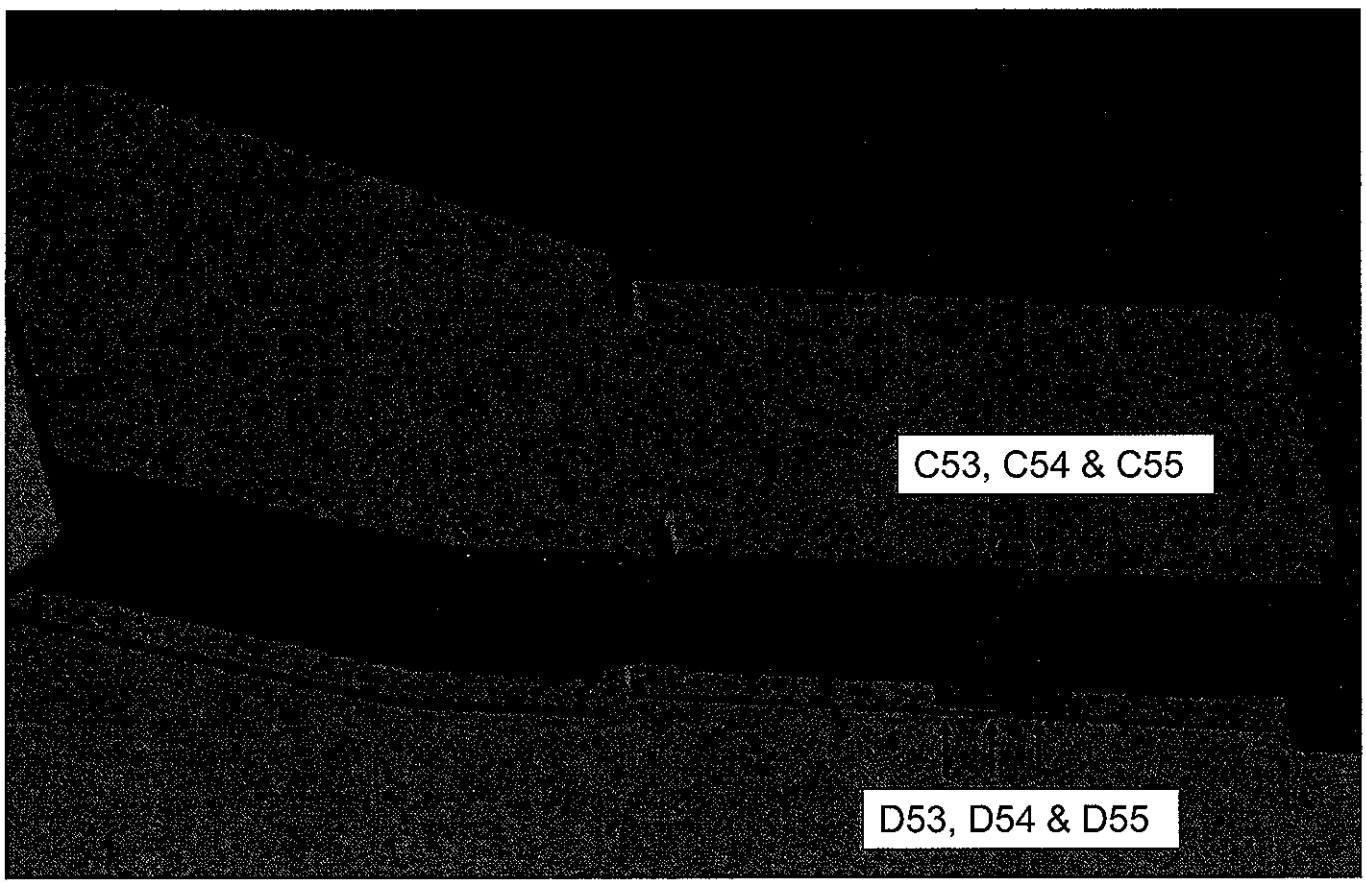

Fig. 3-15: HP retainer on USS: holes utilization

3.5 TAPE ON CAB

Silver Teflon tape shall be put on all the available area on CAB surface, apart from the connectors area.
Tape shall cover also the heater patches and CAB heat pipes, and the heat pipes as far as possible.

3.6 CAB TO USS (FILLER)

Thermal filler shall be inserted in between CAB and USS, along the entire footprint of the contact area.
The thermal filler shall be chotherm 1671.

3.7 HEATERS TO CAB

Two heater patches shall be installed on the CAB Port and Zenith side.
Patches dimensions are 150x150mm (Zenith side) and 700x25mm (Port side).
Patches shall be applied with adhesive type 3M Y 966, and shall be secured at the corner and along the edges with 2216 glue.

Questo documento contiene informazioni di proprietà di CARLO GAVAZZI SPACE SpA: Tutti i diritti sono riservati
All information contained in this document are property of CARLO GAVAZZI SPACE SpA. All right reserved.

The location of the patches is sketched below

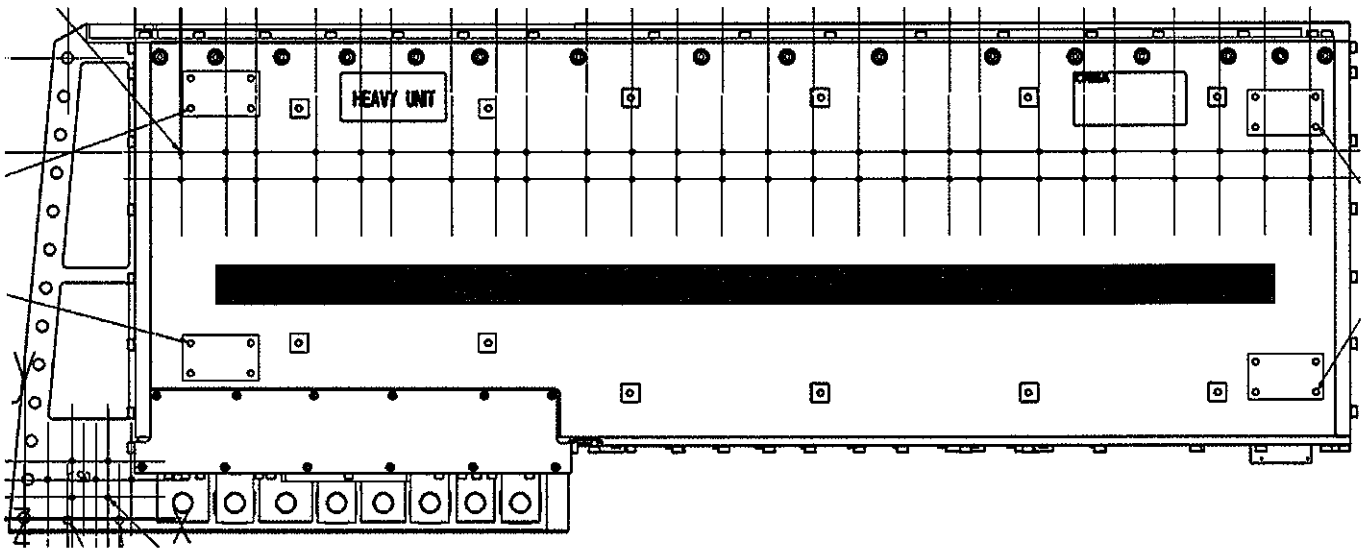

Fig. 3-16: Heater Location on port side (approximate location)

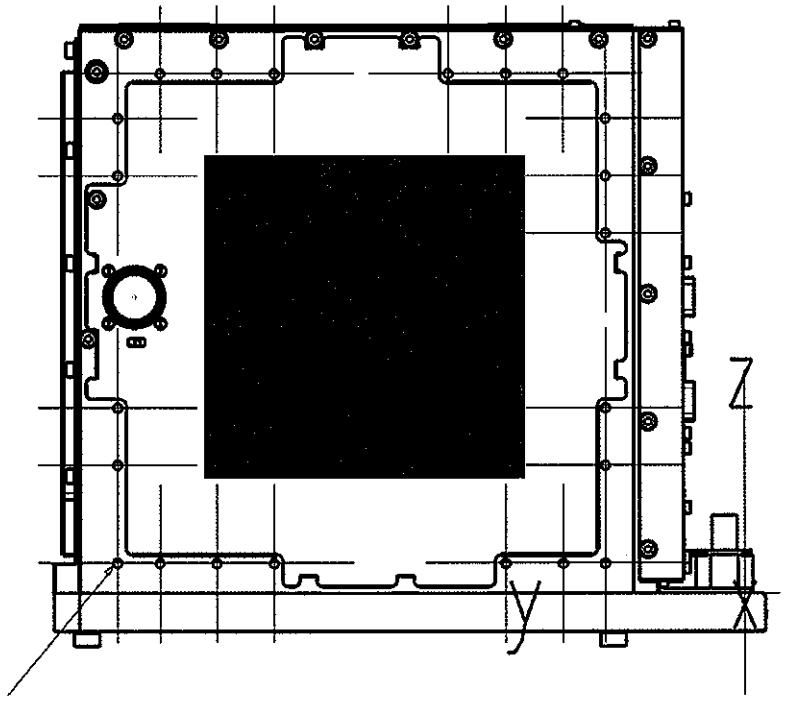

Fig 3-17: Heater Location on Zenith side (approximate location)

3.8 CAB LHP START-UP HEATERS CONNECTOR BRACKET

A connector bracket has been designed, to host a circular connector for the CAB LHP startup heaters. This bracket is bolted on the wake radiator

The mechanical interfaces are detailed in the following figures:

Questo documento contiene informazioni di proprietà di CARLO GAVAZZI SPACE SpA: Tutti i diritti sono riservati
All information contained in this document are property of CARLO GAVAZZI SPACE SpA. All right reserved.

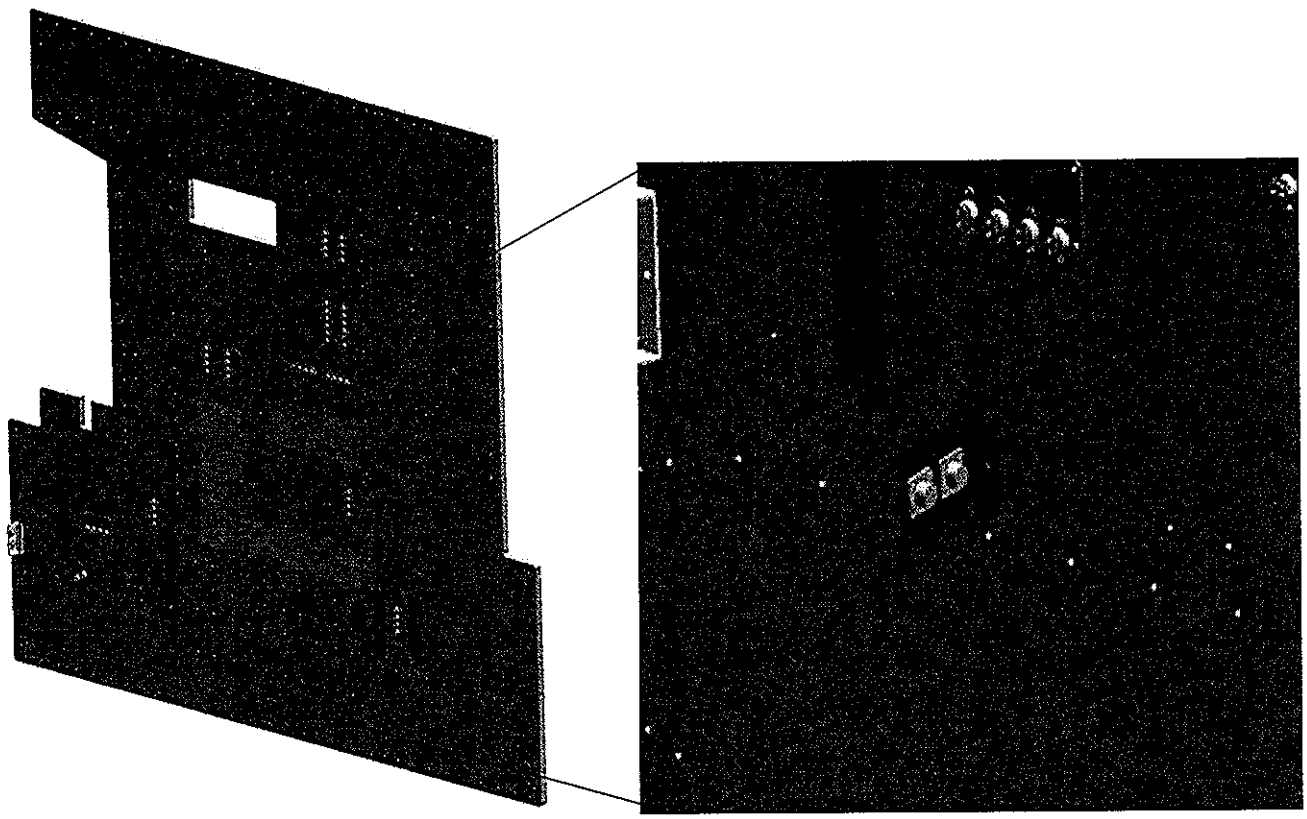

Fig. 3-18: Location of connector bracket on the wake radiator for CAB LHP startup heaters

3.9 CAB SWITCH ON HEATERS CONNECTOR BRACKET

A connector bracket on the CAB has been designed, to host a circular connector for the CAB switch on heaters and thermostats related harness.

The mechanical interfaces are detailed in the following figures:

Questo documento contiene informazioni di proprietà di CARLO GAVAZZI SPACE SpA: Tutti i diritti sono riservati
All information contained in this document are property of CARLO GAVAZZI SPACE SpA. All right reserved.

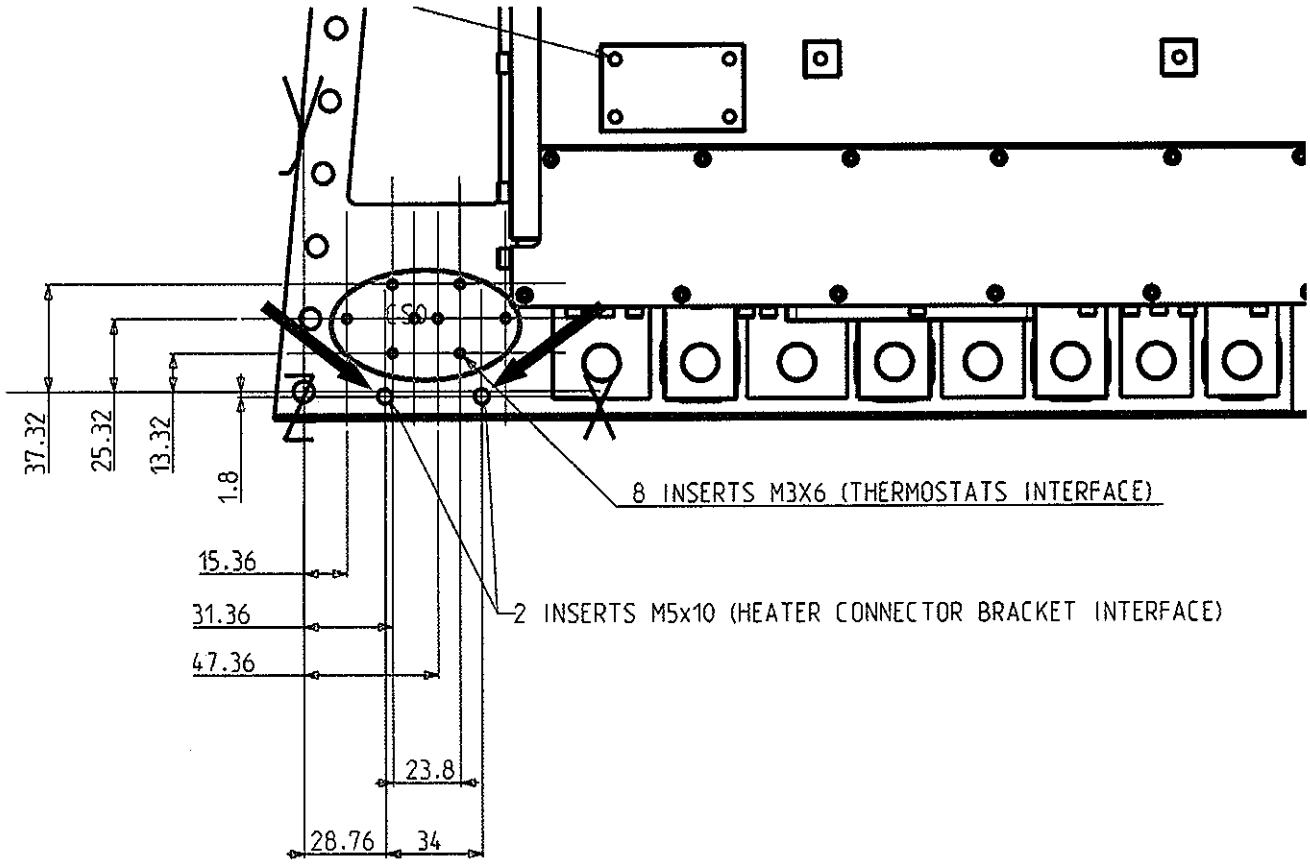

Fig. 3-19: Thermostats (8 inserts M3x6, in green circle) and connector bracket (2 of 3 inserts, M5x10, red arrows) location on CAB.

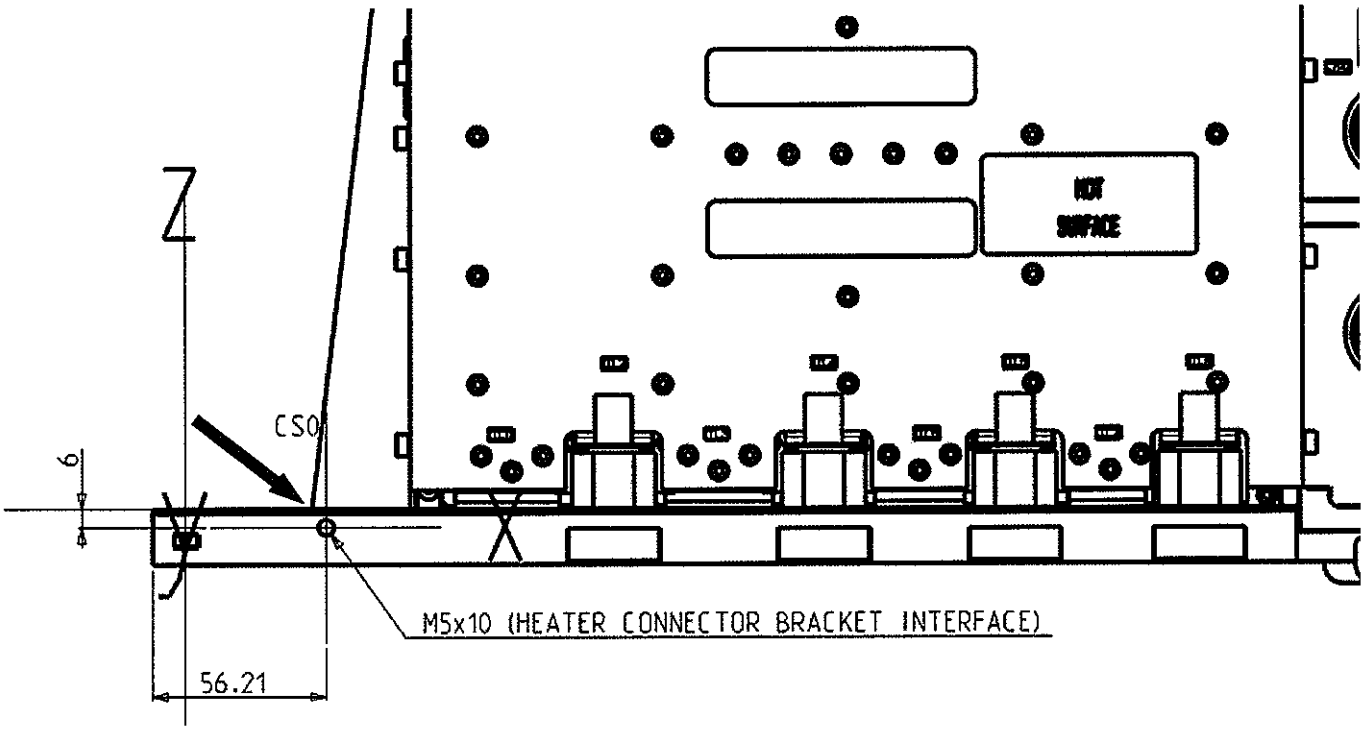

Fig. 3-20: Connector bracket (3rd of 3 inserts, M5x10, red arrow) location on CAB.

Questo documento contiene informazioni di proprietà di CARLO GAVAZZI SPACE SpA: Tutti i diritti sono riservati
All information contained in this document are property of CARLO GAVAZZI SPACE SpA. All right reserved.

4. THERMAL INTERFACES

4.1 CONDUCTIVE INTERFACES

The following conductive interfaces have been identified:

4.1.1 LHP EVAPORATORS TO CAB

The interface is mediated by chotherm 1671 and provides a thermal conductance of ~1000W/m^2/K.
Accounting for the footprint of the saddle (0.0124m^2) the thermal contact interface per evaporator saddle is therefore equal to 12.4W/K.

The typical heat loads that are crossing each of these interface during ramp-up (worst case) in a typical hot case are of the order of 150W peak typical per each interface

4.1.2 LHP CONDENSER TO WAKE RADIATOR

Condensers are glued onto the radiator skin.
The interface conductance is equal to 2000W/m^2/K, by using a ~1W/m/K conductive glue and assuming a (conservative) average thickness of the glue layer of 0.5mm.
The contact area is 12.5mm wide, and in total 7076mm long (per each condenser assembly).
Each condenser line has therefore a contact area of 0.0885m^2, corresponding to a total contact conductance of 177W/K. The way this interface conductance is implemented in the model is explained in RD6.

The power amount is the same injected in each evaporator body, in the ramp-up case the peak value os of the order of 150W per LHP line.

4.1.3 HP TO CAB

Heat pipes to CAB are bolted with 52 bolts M3
Total length is 775mm, and the pipe interface width is 26mm, resulting in a contact area of 0.02015m2

Chotherm 1671 (~1000W/m2/K contact conductance) is used.
The thermal contact value is justified, since the contact pressure generated by 52 bolts over the entire footprint, assuming the torque to be 1.1 Nm, results to be 680psi, much higher than the nominal exercise pressure optimal for chotherm (200-300 psi).

4.1.4 HP TO USS

The Heat Pipes contact area on the USS is 320x30 mm^2 and 170x30 mm^2 on the two ends per each pipe, summing up to a total contact area of 0.0288+0.0153 m^2.
The contact conductance is assumed to be larger than 1000 W/m^2/K, by using a ~1W/m/K conductive glue and assuming a (conservative) average thickness of the glue layer of 1.0 mm.
The overall HP system conductance at both USS-02 interfaces is therefore 34.56 W/K and 18.36 W/K respectively.

4.1.5 CAB TO USS (FILLER)

Questo documento contiene informazioni di proprietà di CARLO GAVAZZI SPACE SpA: Tutti i diritti sono riservati
All information contained in this document are property of CARLO GAVAZZI SPACE SpA All right reserved.

The contact conductance between the CAB and the USS is mediated by a thermal filler (chotherm), with a contact conductivity of 1000W/m^2/K. The overall conductance sums up to 68 W/K, corresponding to a contact area of 0.0678m^2

4.2 RADIATIVE INTERFACES

All CAB surfaces shall be covered with Silver Teflon Tape, 5mil, unless otherwise specified or unless tape application is not allowed (mechanical interface areas, connector side, lifting device interfaces.
The optical properties are reported in RD6.

Questo documento contiene informazioni di proprietà di CARLO GAVAZZI SPACE SpA: Tutti i diritti sono riservati
All information contained in this document are property of CARLO GAVAZZI SPACE SpA. All right reserved.

5. ELECTRICAL INTERFACES

5.1 LHP STARTUP HEATERS

LHP startup heaters shall be connected to a circular connector type MS27497E8F35PA 6x22D-p. The connector is mechanically mounted on a Wake radiator dedicated bracket.

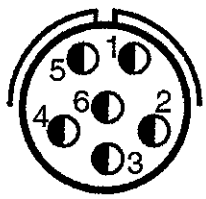

Fig. 5-1: CAB LHP startup heaters contacts layout.

4 contacts are needed, for the + and – feed of the A and B power supply busses.
The proposed pin function is:

Contact number	description
1	A+
2	A–
3	B+
4	B–
5	Not connected
6	Not connected

Tab. 5-1: LHP startup heaters connector pin function

The AMS-collaboration will provide the mating connector on the PDS side.

5.2 CAB SWITCH ON HEATERS

CAB switch on heaters shall be connected to a circular connector type MS27497E8F35PA 6x22D-p The connector is mechanically mounted on a bracket on the CAB plate (see section 3.9).

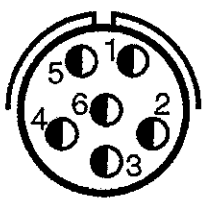

Fig. 5-2: CAB switch on heaters contacts layout.

4 contacts are needed, for the + and – feed of the A and B power supply busses.

Questo documento contiene informazioni di proprietà di CARLO GAVAZZI SPACE SpA: Tutti i diritti sono riservati
All information contained in this document are property of CARLO GAVAZZI SPACE SpA. All right reserved.

The proposed pin function is

Contact number	description
1	A+
2	A–
3	B+
4	B–
5	Not connected
6	Not connected

Tab. 5-2: CAB switch on heaters connector pin function

The AMS-collaboration will provide the mating connector on the PDS side.

Questo documento contiene informazioni di proprietà di CARLO GAVAZZI SPACE SpA: Tutti i diritti sono riservati
All information contained in this document are property of CARLO GAVAZZI SPACE SpA. All right reserved.