REV.	DATE	DRAWN	CHECKED	APPR.	DESCRIPTION
A	1-4-2008	PP	KVDW	JVS	Added: Alodine areas / Modified: material

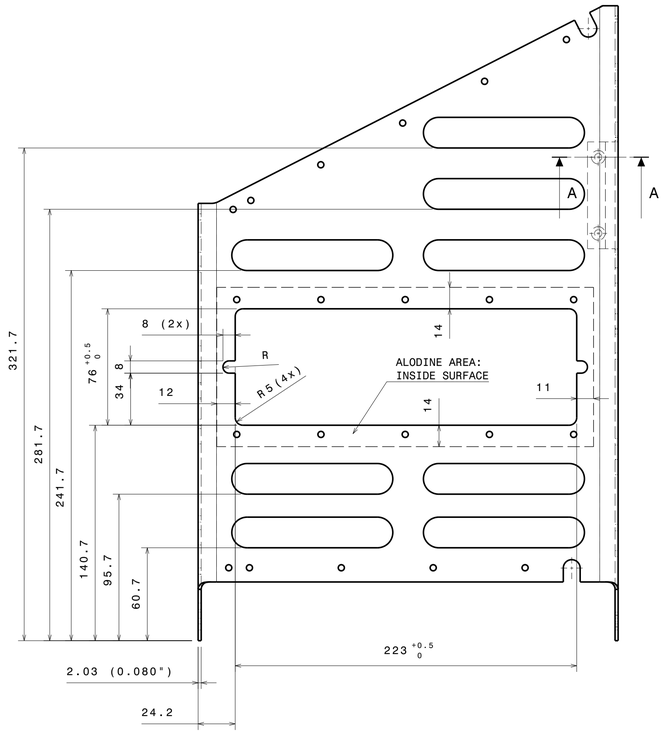

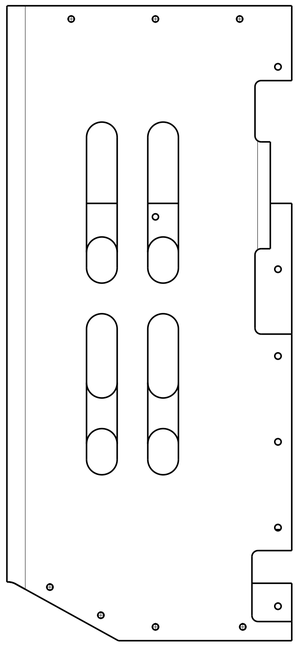

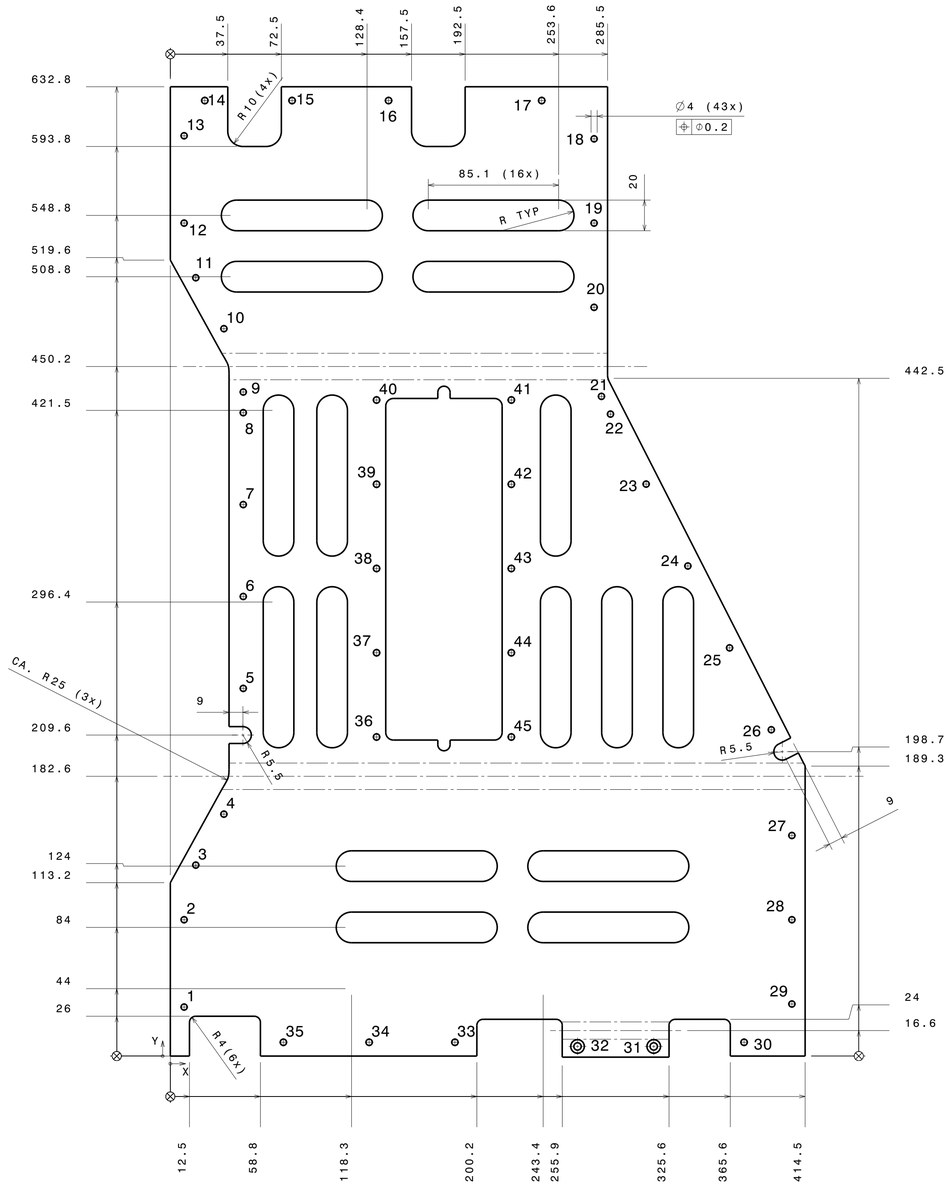

Unfolded view

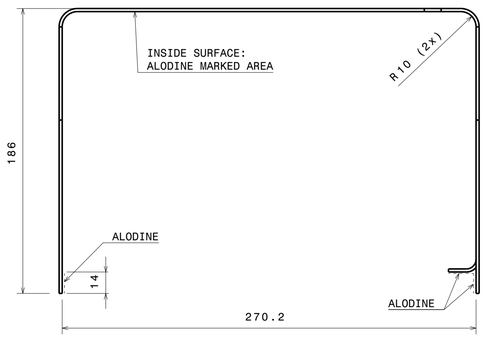

Scale: 1:2

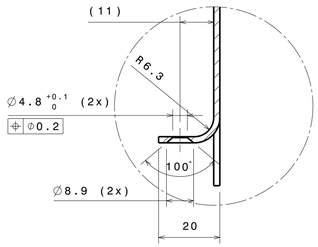

Section view A-A

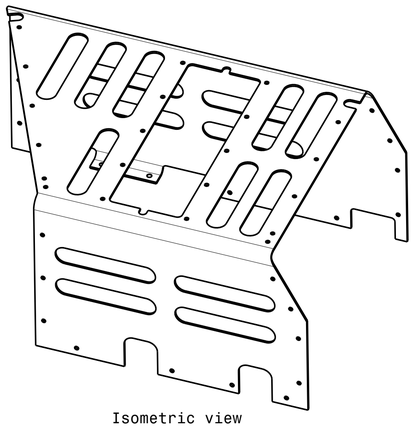

Isometric view

LOCATION OF HOLES		
REF.	X	Y
1	9	32
2	9	89
3	16.6	124.7
4	35	157.9
5	47.6	240
6	47.6	300
7	47.6	360
8	47.6	420
9	47.6	433.5
10	35	474.9
11	16.6	508.1
12	9	543.8
13	9	600.8
14	22.5	623.8
15	79.5	623.8
16	142.5	623.8
17	242.5	623.8
18	276.7	598.8
19	276.7	543.8
20	276.7	488.8
21	281.5	430.7
22	287.4	419.1
23	310.7	373.4
24	337.9	320
25	365.2	266.5
26	392.4	213
27	405.9	144
28	405.9	89
29	405.9	34
30	374.6	9
31	315.6	4.8
32	265.9	4.8
33	185.8	9
34	129.8	9
35	73.8	9
36	134.7	208.3
37	134.7	263.3
38	134.7	318.3
39	134.7	373.3
40	134.7	428.3
41	222.7	428.3
42	222.7	373.3
43	222.7	318.3
44	222.7	263.3
45	222.7	208.3

TOLERANCES ±0.5 EXCEPT AS NOTED

SURFACE TREATMENT AFTER BENDING:
- ANODIZE PER MIL-A-8625 TYPE I EXCEPT MARKED ALODINE AREAS (COVERED BY TAPE)
- ALODINE CLASS 3 PER MIL-DTL-5541

HEAT TREATMENT:
- TO T72 PER SAE-AMS-2770H

REMOVE SHARP EDGES
UNLESS OTHERWISE INDICATED

PART NO.	QTY.	PART	MATERIAL	REMARKS
12.1	1	PP BOX	ALCLAD 2024 T72	PROCESSED FROM ALCLAD 2024 O DIM 632.8 X 414.5 X 2.03(0.080")

		NOMINAL DIMENSION			NOMINAL LENGTH OF SHORT ANGLE SIDE		ANGLE DEVIATION	
SCALE: 1:1		LARGER THAN	UNTIL INCL.	TOL	LARGER THAN	UNTIL INCL.	DEG.	mm/100mm
DATE:	2007-11-12	0,5	3	±0,05				
DESIGNED:		3	6	±0,05	-	10	±1°	±1,9
DRAWN:	P.PUL	6	30	±0,1	10	50	±0,5°	±0,9
CHECKED:	K. van de Wetering	30	120	±0,15	50	120	±0,3°	±0,5
APPROVED:	J. VAN ES	120	400	±0,2	120	400	±0,15°	±0,3
		400	1000	±0,3				
		DRAWING ACCORDING TO DUTCH STANDARDS					PROJECTION	

PROJECT: AMS TTCS

SUBJECT: TTCBP FM: PP BOX

NATIONAL AEROSPACE LABORATORY

PROJECT- CHAPTER NO.: ET5998-06

DRW. NO.: 12

SIZE: A1 | CATIA DRAWN | ISSUE: A