REV.	DATE	DRAWN	CHECKED	APPR.	DESCRIPTION
A	7-11-2007	KvdW	GE	JvE	PART 3.3: DIM 100 PRE-WELDING ADDED, ROUTING MODIFIED
B	5-12-2007	KvdW		JvE	Part 3.3: ROUTING MODIFIED

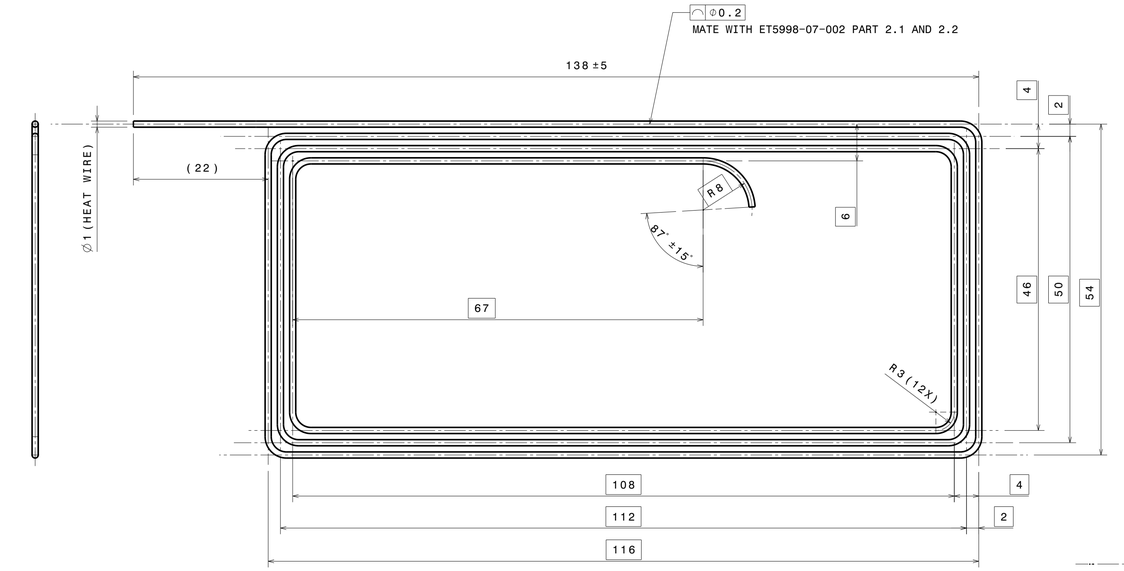

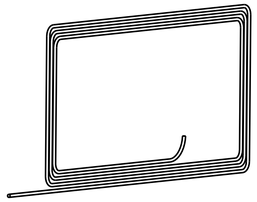

Isometric view

SPECIFICATION HEAT WIRE:
- TYPE: ZEZAc 10/10-104-10/
- MATERIAL: AISI 304
- COLD ENDS 10 CM
- EQUIPED WITH 2 CONNECTORS CM10/CEMENT8
  ENDING IN 200 MM ET1419WHITE AWG 14 ELECTRICAL WIRES
  FOR CONNECTION TO THE TTCB CONNECTOR BLOCK
- SUPPLIER: THERMO COAX

Mach:		Part:	
Mat: SEE PART LIST		3.1	
Scale: 2:1	Qty: 2	PROJ.: ET5998-07 CATPart: 001	

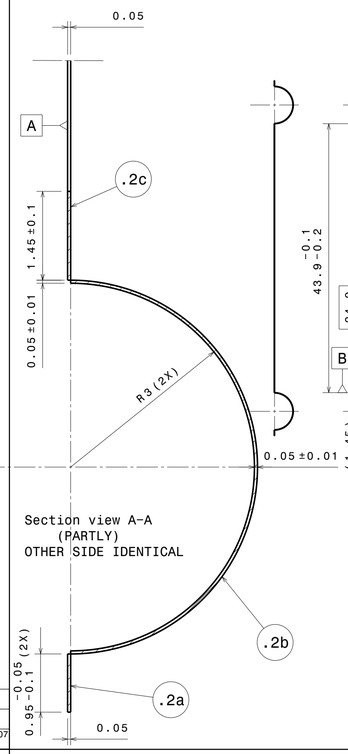

Section view A-A
(PARTLY)
OTHER SIDE IDENTICAL

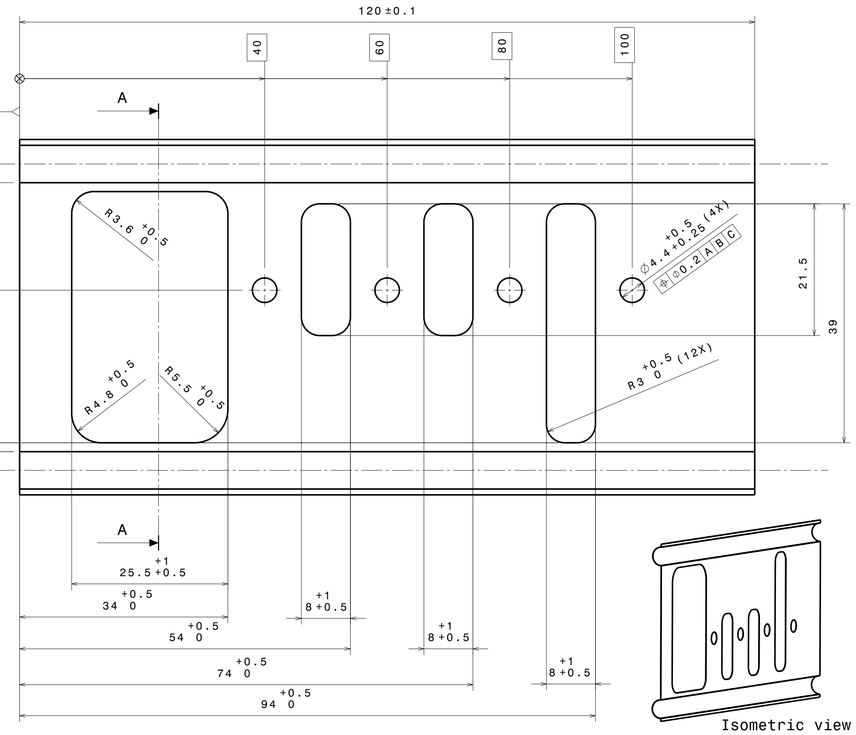

Isometric view

SOLDERING/BRAZING MATERIAL TO BE DEFINED BY SOLDERING COMPANY
MATERIAL SPECIFICATION TO BE SEND TO NLR AND NASA PRIOR TO SOLDERING

Mach:		Part:	
Mat: T.B.D.		3.2	
Scale: 2:1	Qty: SEE PART LIST	PROJ.: ET5988-07 CATPart: 001	

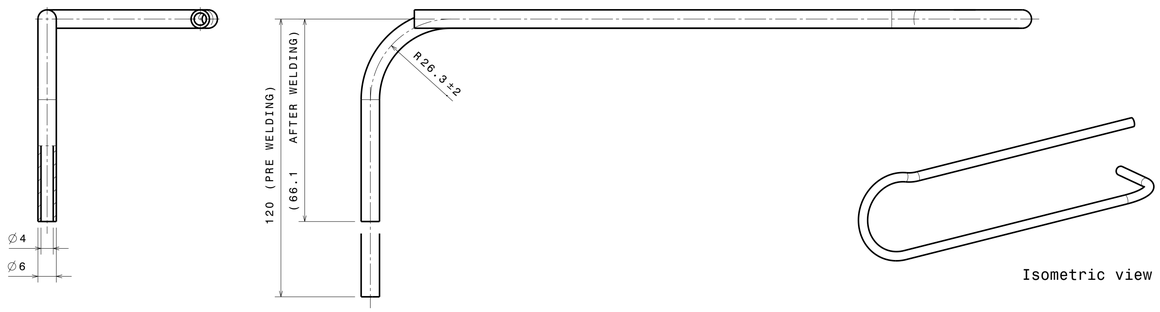

Isometric view

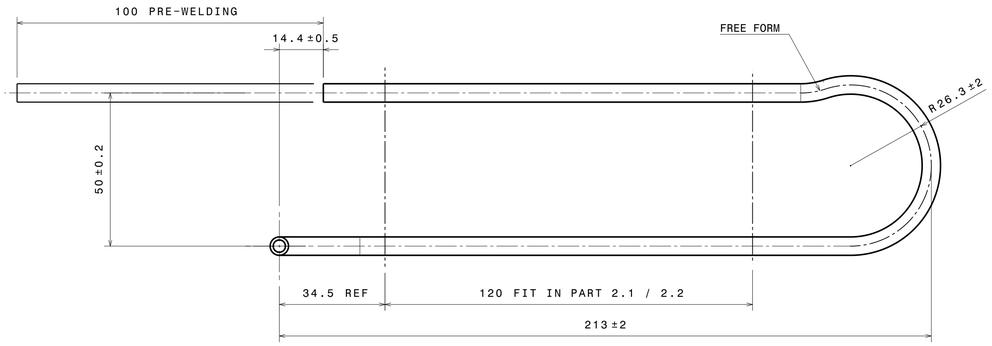

LENGTH TUBE: 600

Mach:		Part:	
Mat: AISI 316L		3.3	
Scale: 1:1	Qty: 1	PROJ.: ET5998-07 CATPart: 002	

PART NO.	QTY.	PART	MATERIAL	REMARKS
.3	1	PIPE	AISI 316L	DIM ∅6 x ∅4, L = 650
.2c	1	SOLDER PLATE: MID	T.B.D.	DIM.: 120 X 43.9 THICK 0.05
.2b	4	SOLDER PLATE: CILINDRICAL STRIP	T.B.D.	THICK: 0,05 LENGTH: 120 FLAT DEVELOPED LENGTH: 9.5MM
.2a	2	SOLDER PLATE: SIDE STRIP	T.B.D.	DIM.: 120 X 0.95 THICK 0.05
.2	1	SOLDER PLATES		
.1	2	HEAT WIRE DIA 1	AISI 304	TYPE: ZEZ Ac 10/10-104-10/ SUPPLIER: THEMO COAX

SCALE: 1:1 2:1	NOMINAL DIMENSION			NOMINAL LENGTH OF SHORT ANGLE SIDE		ANGLE DEVIATION	
	LARGER THAN	UNTIL INCL.	TOL	LARGER THAN	UNTIL INCL.	DEG.	mm/100mm
DATE: 2006-08-28	0,5	3	±0,05				
	3	6	±0,05	–	10	±1°	±1,8
DESIGNED: J. HALM	6	30	±0,1	10	50	±0,5°	±0,9
DRAWN: K. V.D. WETERING	30	120	±0,15	50	120	±0,3°	±0,5
	120	400	±0,2	120	400	±0,15°	±0,3
CHECKED: G. ELBERTSEN	400	1000	±0,3				
APPROVED: J. V. ES	DRAWING ACCORDING TO DUTCH STANDARDS						PROJECTION

PROJECT: AMS TTCS

SUBJECT:
TTCBP FM: COLD ORBIT HEATER, PARTS

NATIONAL AEROSPACE LABORATORY	PROJECT- CHAPTER NO.: ET5998-07		DRW. NO. : 003
	SIZE: A1	CATIA DRAWN	ISSUE: B