REV.	DATE	DRAWN	CHECKED	APPR.	DESCRIPTION
C	11-12-07	P.PUL	KvdW	J.V.ES	modified: assembly view, wire connection orientation, pipe length, pipe bend radius, assembly procedure, spares
D	8-5-2008	PP	KVDW	JVE	Removed: question mark part 4.5 / Changed: Thread part 4.5
E	5-9-2008	PP	KVDW	JVE	Modified: Assy
F	24-3-2009	PP	KVDW	JVE	Modified: Pos. 4.3a, 4.3b Pre welding length, total length

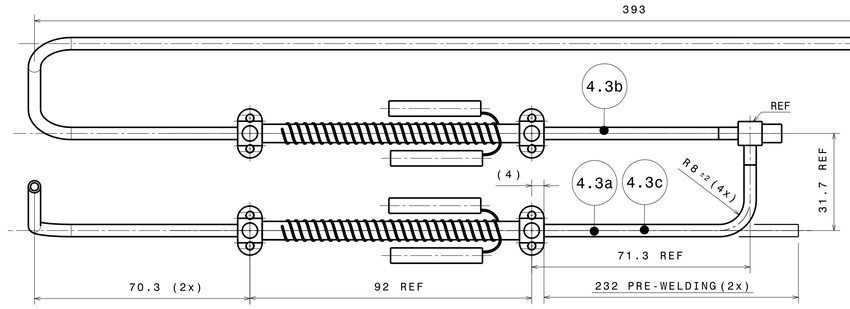

POS 4.3a: L1=55±1
POS 4.3c: L1=TBD (SPARE PART)

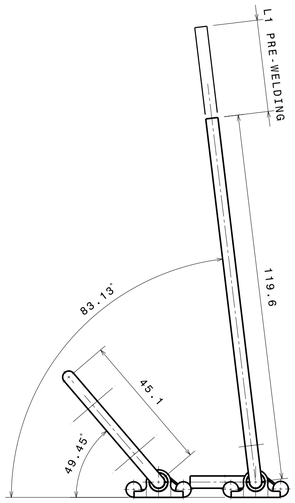

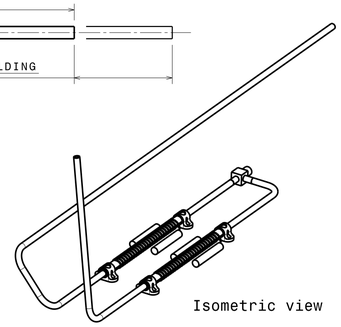

Isometric view

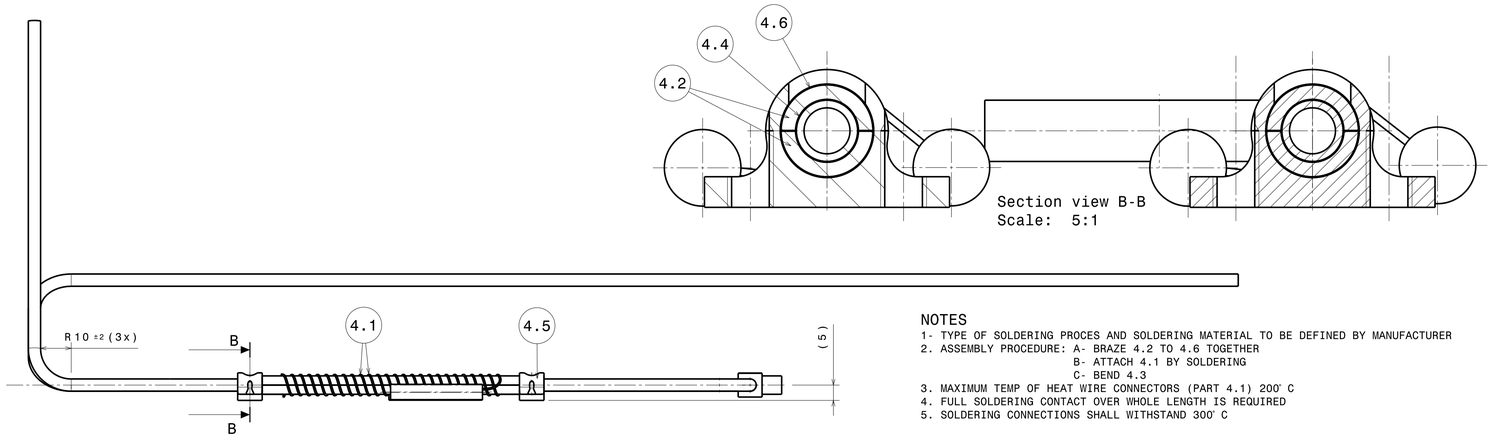

Section view B-B
Scale: 5:1

NOTES
1- TYPE OF SOLDERING PROCES AND SOLDERING MATERIAL TO BE DEFINED BY MANUFACTURER
2. ASSEMBLY PROCEDURE: A- BRAZE 4.2 TO 4.6 TOGETHER
B- ATTACH 4.1 BY SOLDERING
C- BEND 4.3
3. MAXIMUM TEMP OF HEAT WIRE CONNECTORS (PART 4.1) 200° C
4. FULL SOLDERING CONTACT OVER WHOLE LENGTH IS REQUIRED
5. SOLDERING CONNECTIONS SHALL WITHSTAND 300° C

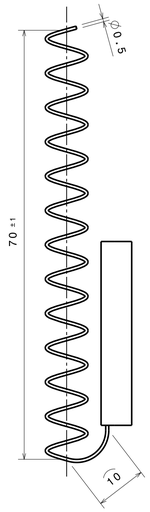

HEAT WIRE SPECIFICATION:

GEOMETRY:
- PITCH = 5.6 MM (+/- 0,2 MM)
- NUMBER OF COILS: ~12,5
- LENGTH COIL (WITHOUT STRAIGHT ENDS): 255 MM
- LENGTH BETWEEN COIL AND CONNECTOR: 10 MM

QUALITY:
- MATERIAL COATING: STAINLESS STEEL 304L
- DELIVERER: THERMO COAX
  HEATER TYPE: 2NCNCAc
  HEATER DIAMETER: 0,5 MM.
  HEATER LENGTH: 266 MM
  HEATER COLD LENGTH: 0-0 CM.
  CONNECTOR TYPE: CP10

Mach: -		Part: 4.1	
Mat: COAT: CRES			
Scale: 2:1	Qty: 4	PROJ.: ET5998-07 CATPart: 003	

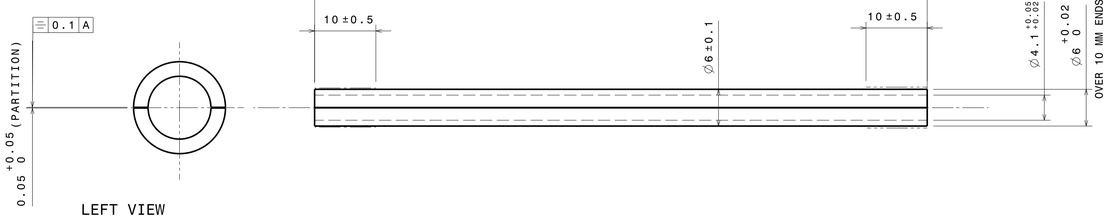

LEFT VIEW
SCALE 5 : 1

Mach: 1.6		Part: 4.2	
Mat: COPPER (O_2 FREE)			
Scale: 2:1	Qty: 2	PROJ.: ET5998-07 CATPart: 003	

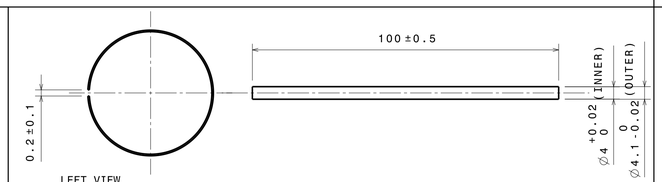

LEFT VIEW
SCALE 10:1

Mach: -		Part: 4.4	
Mat: TBD			
Scale: 1:1 (10:1)	Qty: 2	PROJ.: ET5998-07 CATPart: 003	

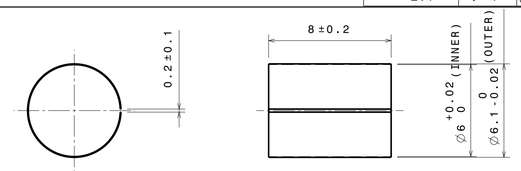

Mach: -		Part: 4.6	
Mat: TBD			
Scale: 5:1	Qty: 4	PROJ.: ET5998-07 CATPart: 003	

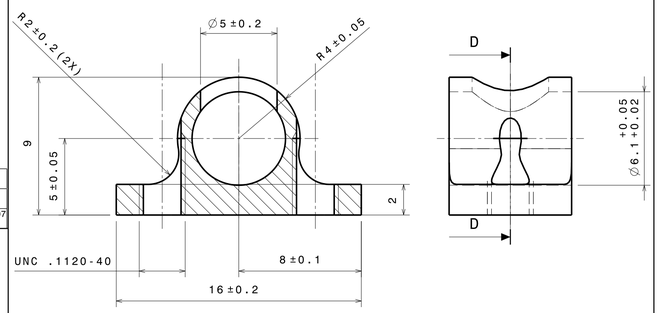

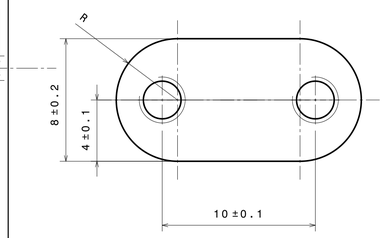

Mach: 1.6		Part: 4.5	
Mat: CRES 316			
Scale: 5:1	Qty: 4	PROJ.: ET5998-07 CATPart: 003	

REMOVE
SHARP EDGES
UNLESS OTHERWISE INDICATED

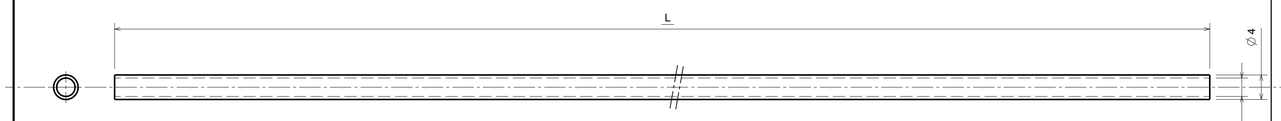

POS 4.3a: L=554, Qty: 1
POS 4.3b: L=858, Qty: 1
POS 4.3c: L=450, Qty: 1 (SPARE PARTS)

Mach: 1.6		Part: 4.3	
Mat: CRES 316			
Scale: 2:1	Qty: -	PROJ.: ET5998-07 CATPart: 001	

QTY. SPARE PARTS

PART NO.	QTY.		PART	MATERIAL	REMARKS
4.6	4	2	VACUUM SOLDER CYLINDER	TBD	SHEET DIM.:18.8X8 THICK: 0,05
4.5	4	2	BRACKET	CRES 316	DIM.: 16 X 9 X 8
4.4	4	2	VACUUM SOLDER CYLINDER	TBD	SHEET DIM.:12.5X100 THICK: 0,05
4.3c		1	PIPE DIA 4 X 3 (SPARE PART)	CRES 316	DIM.: DIA. 4X3 LENGHT 450
4.3b	1		PIPE DIA 4 X 3	CRES 316	DIM.: DIA. 4X3 LENGHT 858
4.3a	1		PIPE DIA 4 X 3	CRES 316	DIM.: DIA. 4X3 LENGHT 554
4.2	2	1	PIPE	COPPER O_2 FREE	DIM.: DIA 6,1 LENGTH: 100
4.1	4	2	HEAT WIRE DIA. 0,5 MM	SS 304L	TYPE: 2NCNCAc, HOT LENGTH 266

SCALE: 1:1 2:1 5:1 10:1	NOMINAL DIMENSION			NOMINAL LENGTH OF SHORT ANGLE SIDE		ANGLE DEVIATION	
	LARGER THAN	UNTIL INCL.	TOL	LARGER THAN	UNTIL INCL.	DEG.	mm/100mm
DATE: 2007-11-12	0,5	3	±0,05	-	10	±1°	±1,8
DESIGNED: J. HALM	3	6	±0,05	10	50	±0,5°	±0,9
DRAWN: P. PUL	6	30	±0,1	50	120	±0,3°	±0,5
CHECKED: G. ELBERTSEN	30	120	±0,15	120	400	±0,15°	±0,3
APPROVED: J. V. ES	120	400	±0,2				
	400	1000	±0,3				
	DRAWING ACCORDING TO DUTCH STANDARDS					PROJECTION	

PROJECT: AMS TTCS

SUBJECT:

TTCB-P FM: PRE HEATER, ASSY AND PARTS

NATIONAL AEROSPACE LABORATORY	PROJECT- CHAPTER NO.: ET5998-07		DRW. NO.: 4
	SIZE: A1	CATIA DRAWN	ISSUE: F