REV.	DATE	DRAWN	CHECKED	APPR.	DESCRIPTION
A	17-12-07	PP	K vd W	J v ES	ADDED: POS 11,12,13 AND HEATERWIRE SPECIFICATION
B	10-10-08	PP	KVDW	JVE	Added: heat wire geometry pos.1.7, integration strain relief pos. 6.1, 6.2, 1.14
C	20-3-2009	PP	KVDW	JVE	Updated: Views / Added: moments in lbf-in Changed: Partslist Pos. 1.12 to NAS1587-4
D	17-9-2009	KvdW	GE	JvE	TORQUE VALUES ADDED / FINALISED

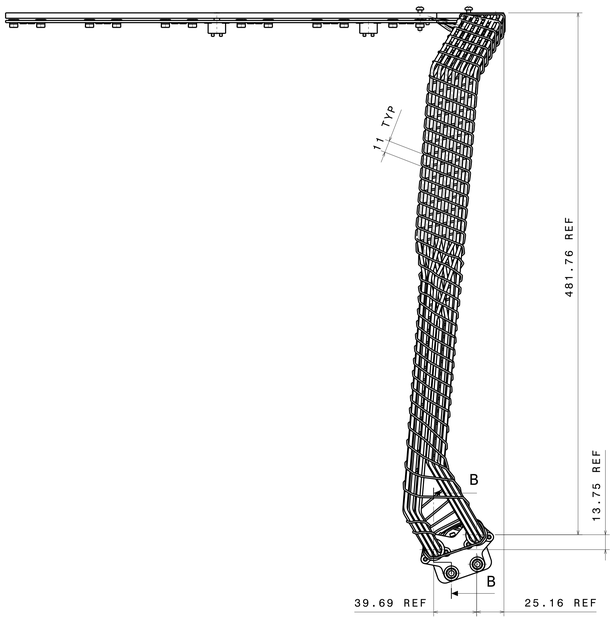

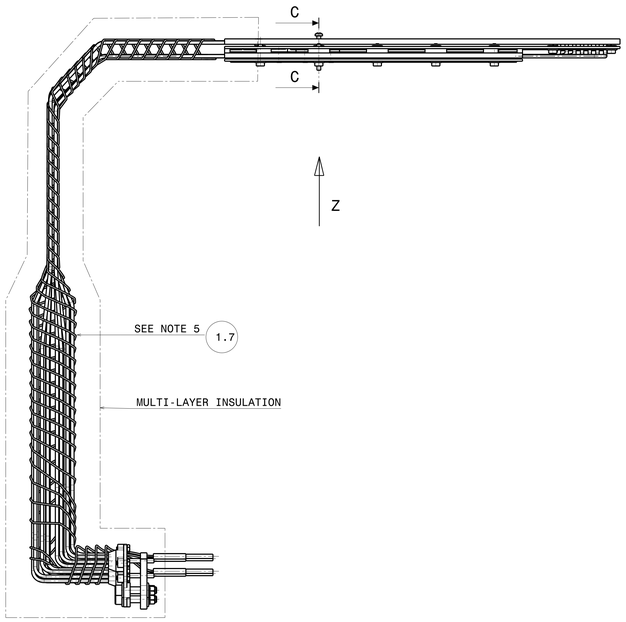

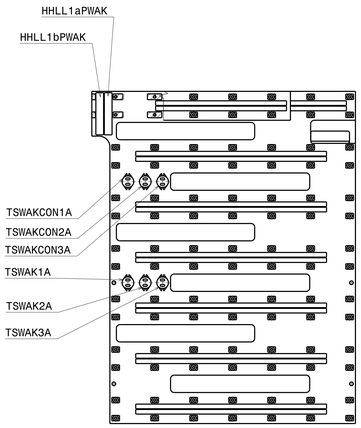

VIEW Z - PRIMARY WAKE
SCALE 1:3
NUTS AND TUBES NOT SHOWN FOR CLARITY

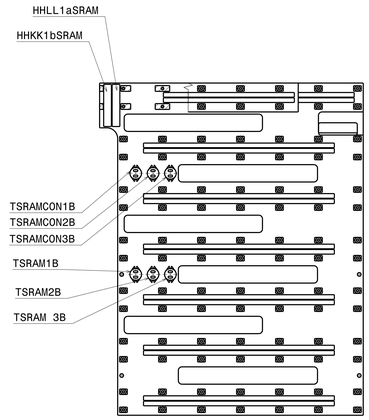

VIEW Z - SECONDARY RAM
SCALE 1:3
NUTS AND TUBES NOT SHOWN FOR CLARITY

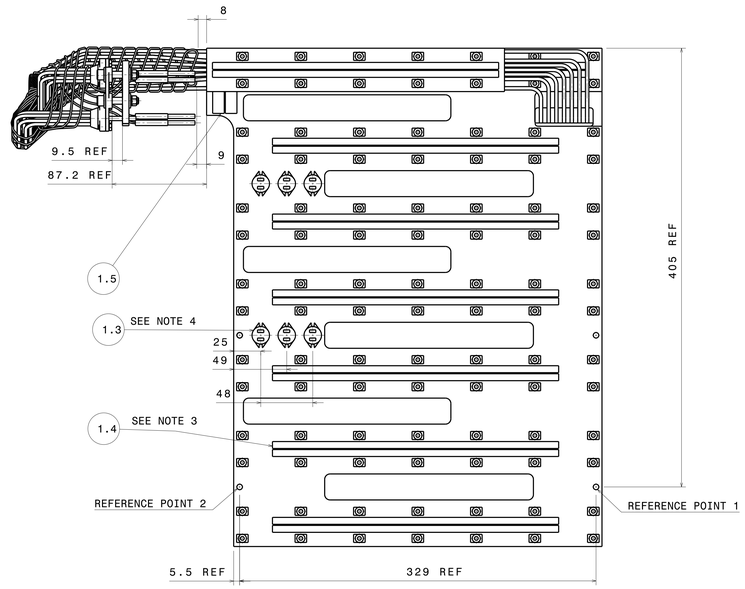

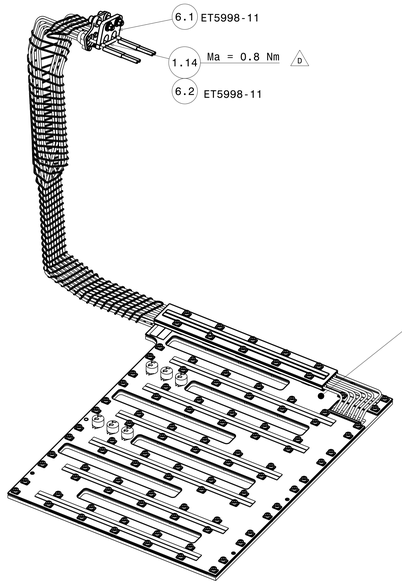

Isometric view
no scale

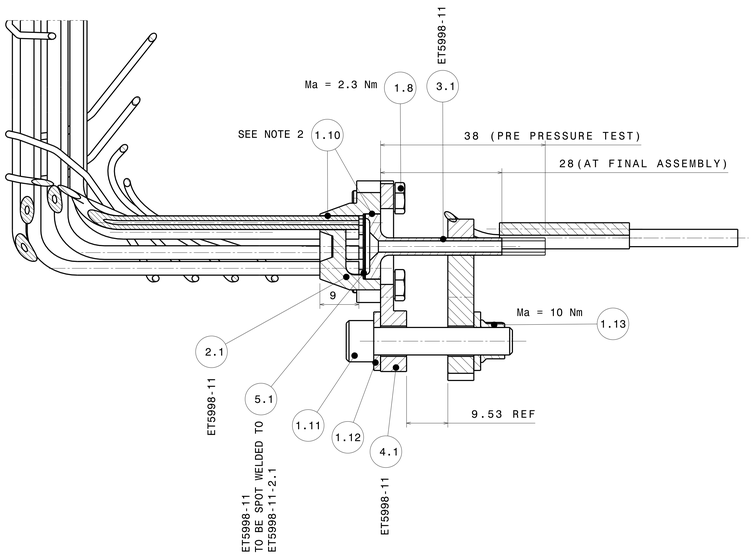

Section view B-B
Scale: 2:1

NOTES:

1 - PRIMARY WAKE IS IDENTICAL TO SECONDARY RAM EXCEPT OF LABELING OF HEATERS AND THERMAL SWITCHES FOR SECONDARY WAKE AND PRIMARY RAM SEE ET5998-10-1
2 - HARDENING AND BRAZING OF MANIFOLD ACCORDING TO PRODEDURE AMSTR-NLR-PR-041 'TTCS FM CONDENSER MANIFOLD BRAZING PROCEDURE'
3 - GLUING OF PLATES AND HEATERS ACCORDING TO AMSTR-NLR-PR-038 'TTCS FM CONDENSER GLUING PROCEDURE'
4 - GLUING OF THERMAL SWITCHES ACCORDING TO AMSTR-NLR-PR-037 'THERMAL SWITCH INTEGRATION PROCEDURE'
5 - INSTALLATION OF WIRE HEATERS ACCORDING TO AMSTR-NLR-PR-043 'TTCS FM CONDENSER LIQUID LINE HEATER INSTALLATION PROCEDURE'

QTY FOR BOTH CONDENSERS

PART NO.	QTY.	PART	REMARKS
1.14	2	SCREW, CAP, SOCKET HEAD	NAS1351N04-20
1.13	8	NUT	NAS1291-C4M
1.12	16	WASHER	NAS1587-4
1.11	8	SCREW, CAP, SOCKET HEAD	NAS1351N4-20
1.10	AR	SOLDER	AMS4787 (GOLD-NICKEL ALLOY)
1.9	AR	GLUE	MASTERBOND EP21TDC-2LO
1.8	12	BOLT, SELF-LOCKING, HEX HEAD, CRES	MS21095-1-001
1.7	4	HEATER WIRE	Thermocoax ZUZAc15/4cm-336cm-4cm/2*CM15/ CEMENT8/2219/WHITE/200mm
1.6	-	-	-
1.5	4	HEATER	MINCO FOIL K5222, AWG 26, TYPE I
1.4	32	HEATER	Minco Foil HNK5203R48.4L12B, AWG 22, Type 9
1.3	12	THERMAL SWITCH	HONEYWELL T5705 PART NO. G311P651/03705S-13A005
1.2	1	CONDENSOR SECONDARY RAM	
1.1	1	CONDENSOR PRIMARY WAKE	

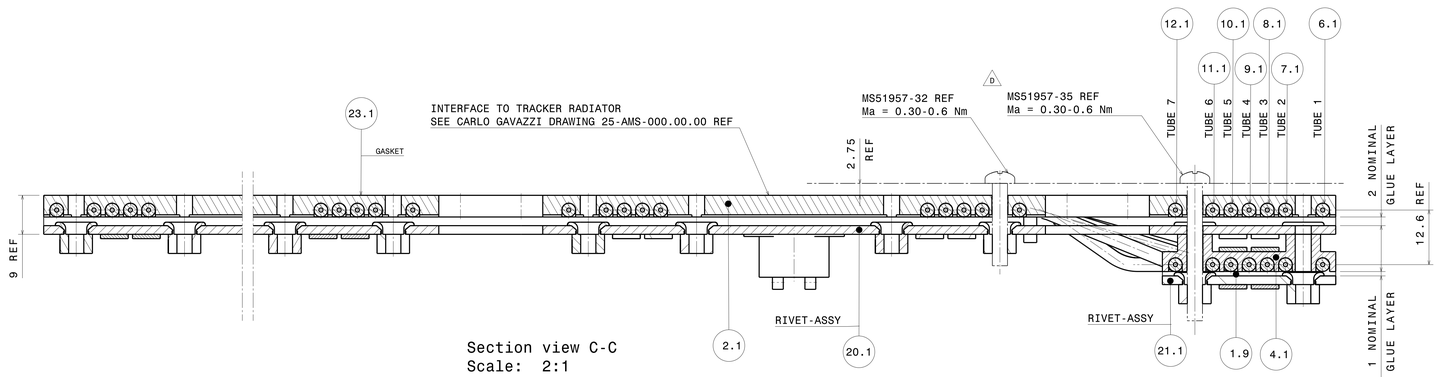

Section view C-C
Scale: 2:1

SCALE:	1:2, (2:1, 1:3)
DATE:	2007-10-31
DESIGNED:	K. VAN DE WETERING
DRAWN:	K. VAN DE WETERING
CHECKED:	G.A. ELBERTSEN
APPROVED:	J. VAN ES

NOMINAL DIMENSION LARGER THAN	UNTIL INCL.	TOL	NOMINAL LENGTH OF SHORT ANGLE SIDE LARGER THAN	UNTIL INCL.	ANGLE DEVIATION DEG.	MM/100MM
0,5	3	±0,05				
3	6	±0,05	-	10	±1°	±1,8
6	30	±0,1	10	50	±0,5°	±0,9
30	120	±0,15	50	120	±0,3°	±0,5
120	400	±0,2	120	400	±0,15°	±0,3
400	1000	±0,3				

DRAWING ACCORDING TO DUTCH STANDARDS

PROJECTION

PROJECT: AMS TTCS
SUBJECT: PW & SR CONDENSER ASSEMBLY FM

NATIONAL AEROSPACE LABORATORY

PROJECT, CHAPTER NO.: ET5998-09
DRW. NO.: 1
SIZE: A0 CATIA DRAWN
ISSUE: D