REV.	DATE	DRAWN	CHECKED	APPR.	DESCRIPTION
A	28-2-2008	PP	KVDH	JVE	Added: Section C-C Kapton heaters / Moved: Pt3's to Accumulator / Modified: TSbox and pre-heater labeling
B	11-3-2008	PP	KVDH	JVE	Modified: Labeling DS5..,DS6..
C	3-4-2008	PP	KVDH	JVE	Added: Pos. 1.8
D	11-6-2008	PP	KVDH	JVE	Modified: NAS1149FN... to NAS1149EN...
E	17-11-08	PP	KVDH	JVE	Added: R to NAS1149EN., ,Accu heater, DS-JPD(6)'s,Pos.1.9 Pos.1.10, TTCBP TC #'s, Foil heaters HTR9 / Moved: DS3's
F	18-3-2009	PP	KVDH	JVE	Modified: Partslist Pos. 1.1, 1.9, 1.10 / Added: Pos.1.11

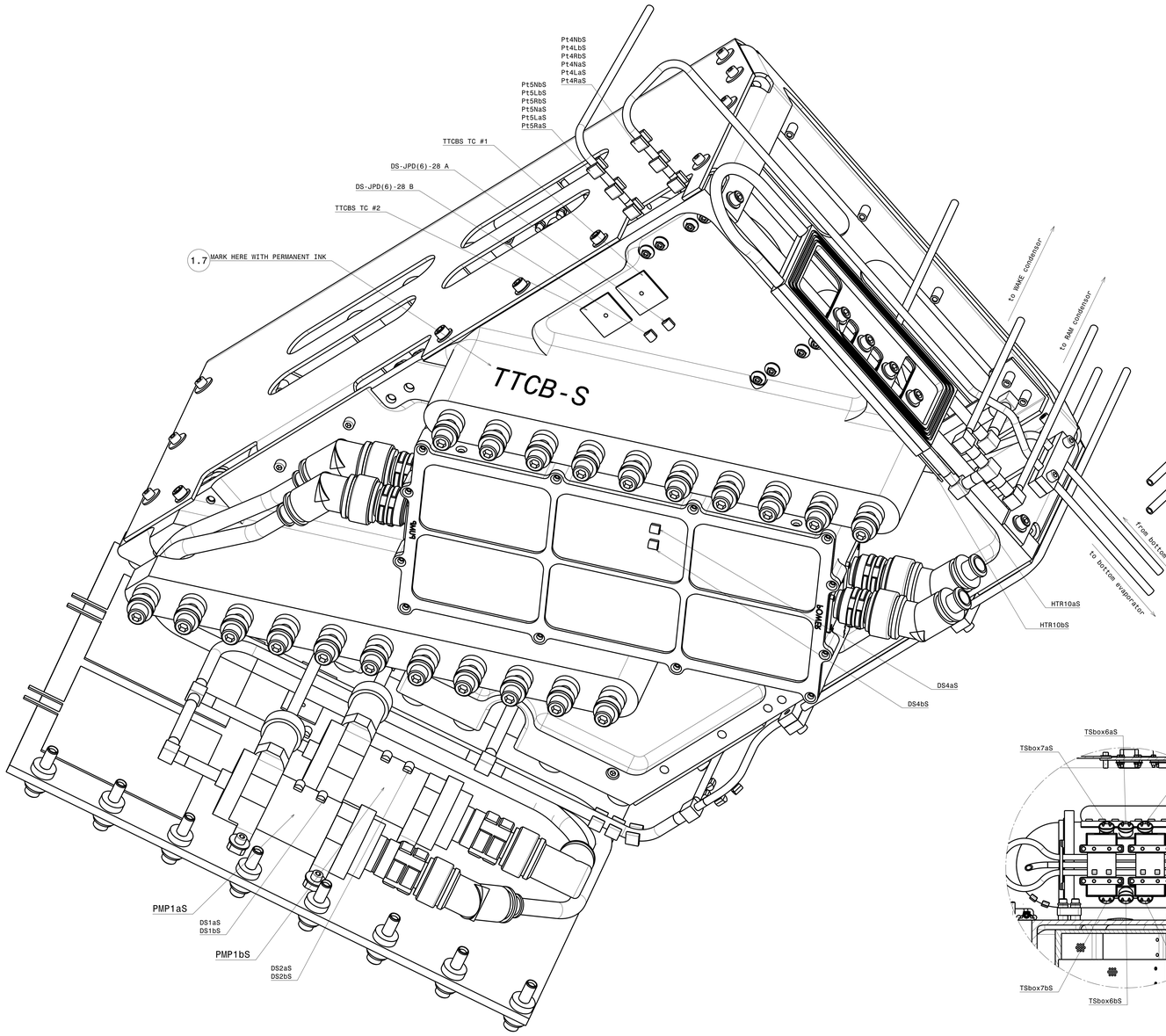

Isometric view: Labeling

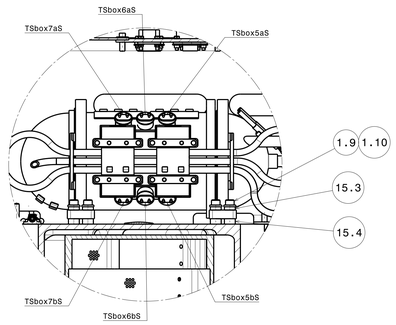

Section view B-B: Labeling

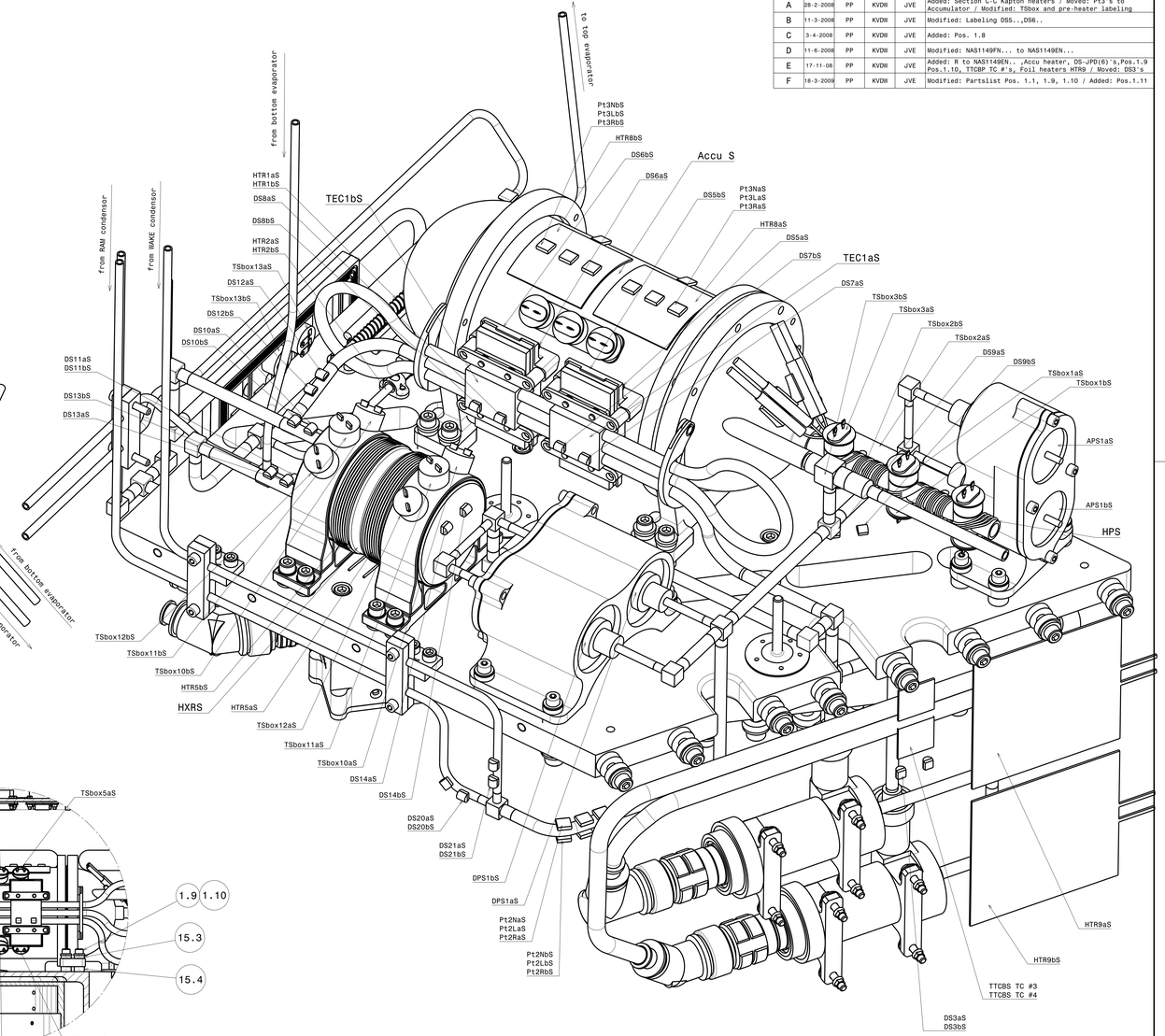

Isometric view: Labeling

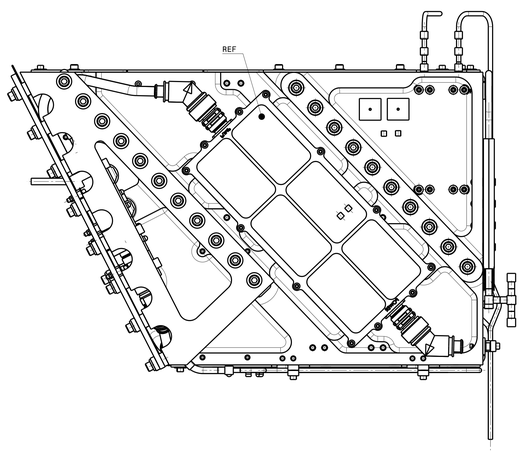

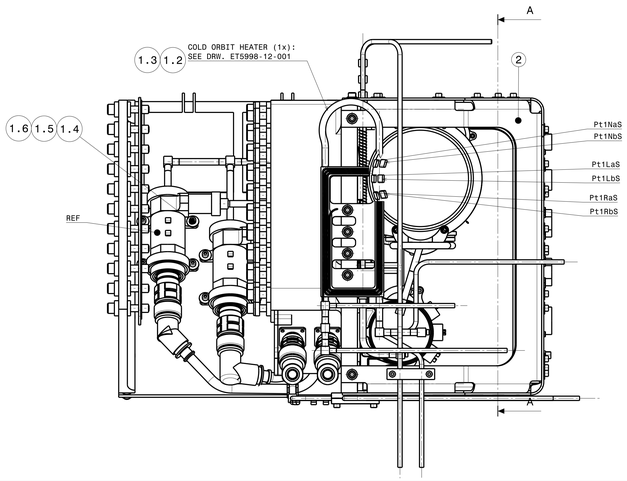

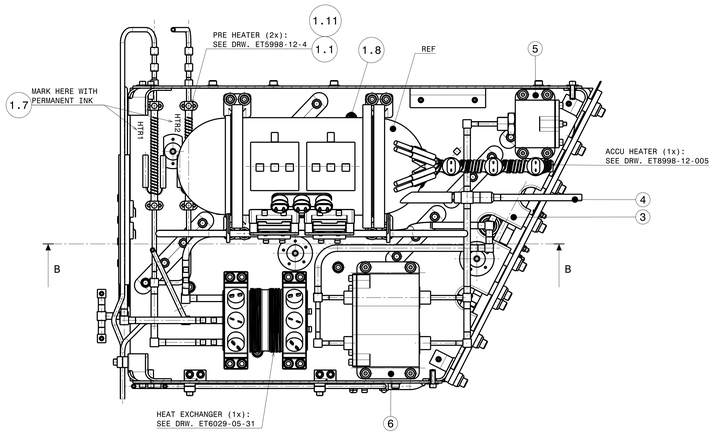

Section view A-A

PART NO.	QTY.	PART	MATERIAL	REMARKS
1.11	8	WASHER	A286	NAS1149EN432R
1.10	8	WASHER	A286	NAS1149E0363R
1.9	8	SCREW	A286	NAS1351N3-16
1.8	6	SCREW	A286	NAS1351N3-10
1.7	-	PRINTING INKT	-	DOMINO BK0101X
1.6	8	NUT	A286	NAS1291C06M
1.5	8	WASHER	A286	NAS1149EN532R
1.4	8	SCREW	A286	NAS1352N06-10
1.3	4	SCREW	A286	NAS1352N08-10
1.2	4	WASHER	A286	NAS1149EN832R
1.1	8	SCREW	A286	NAS1352N04LB-6

SCALE: 1:1, (1:2)
DATE: 2008-02-05
DESIGNED:
DRAWN: P.Pul
CHECKED: K. van de Wetering
APPROVED: J. VAN ES

NOMINAL DIMENSION LARGER THAN	UNTIL INCL.	TOL	NOMINAL LENGTH OF SHORT ANGLE SIDE LARGER THAN	UNTIL INCL.	ANGLE DEVIATION DEG.	MM/100MM
0,5	3	±0,05				
3	6	±0,05	-	10	±1°	±1,8
6	30	±0,1	10	50	±0,5°	±0,9
30	120	±0,15	50	120	±0,3°	±0,5
120	400	±0,2	120	400	±0,15°	±0,3
400	1000	±0,3				

DRAWING ACCORDING TO DUTCH STANDARDS

PROJECTION

PROJECT: AMS TTCS SECONDARY LOOP

SUBJECT: ASSEMBLY THERMAL TRACKER CONTROL BOX FM

NATIONAL AEROSPACE LABORATORY

PROJECT - CHAPTER NO.: ET5998-08

DRW. NO.: 1

SIZE: A0 | CATIA DRAWN | ISSUE: F