REV.	DATE	DRAWN	CHECKED	APPR.	DESCRIPTION
C	17-7-2008	GE	KvdW	JvE	14.2+4 MAT. CHANGED, 14.5+6 ADDED:PASSIVATION
D	1-8-2008	PP	KVDW	JVS	Modified: Material AL7475 to AL7075
E	6-8-2008	PP	KVDW	JVS	Modified: Material Pos. 14.1a, 14.3a AL7075 to AL7475
F	20-11-2008	PP	KVDW	JVS	Modified: Pos. 14.3 bottom holes to diam. 5

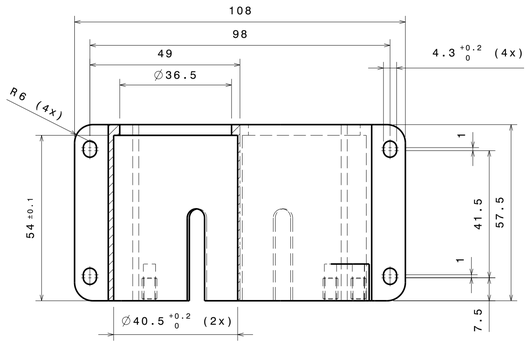

Section view B-B

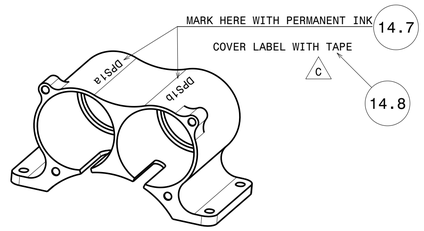

Isometric view

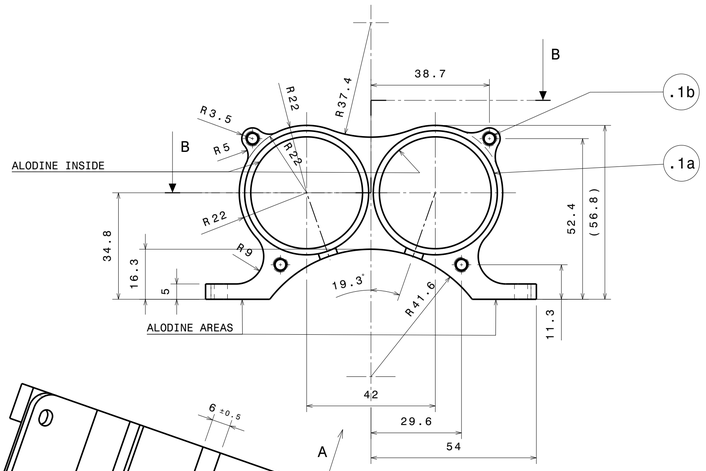

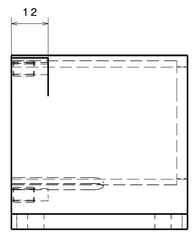

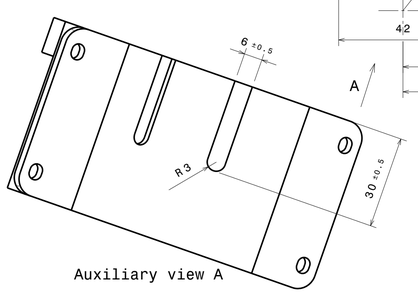

Auxiliary view A

INSTALL INSERTS PER STANDARD MS33537,
ASSEMBLE USING MIL-PRF-85582 WET PRIMER

TOLERANCES ±0.2 UNLESS OTHERWISE INDICATED

SURFACE TREATMENT:
- ANODIZE PER MIL-A-8625 TYPE I EXCEPT ALODINE AREAS
- ALODINE CLASS 3 PER MIL-DTL-5541

Mach: 3.2 / 1.6 ( )		Part:	
Mat: AL7475 T7351		14.1	
Scale: 1:1	Qty: 1	PROJ.: ET5998-6 CATPart: 007	

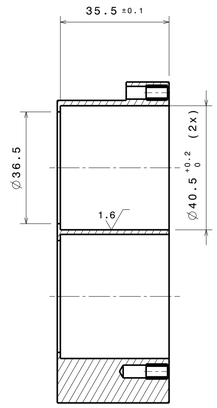

Section view D-D

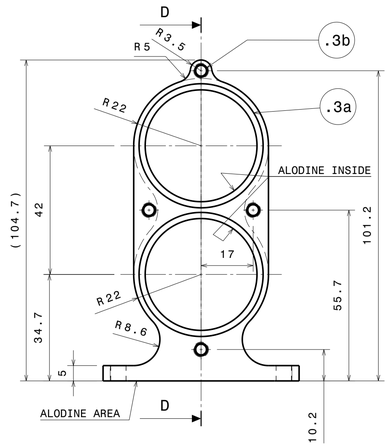

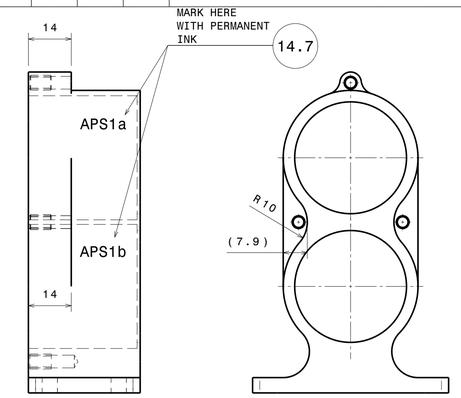

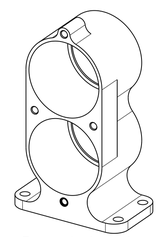

Isometric view

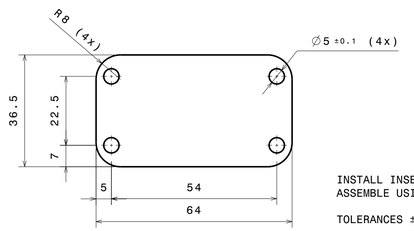

INSTALL INSERTS PER STANDARD MS33537,
ASSEMBLE USING MIL-PRF-85582 WET PRIMER

TOLERANCES ±0.2 UNLESS OTHERWISE INDICATED

SURFACE TREATMENT:
- ANODIZE PER MIL-A-8625 TYPE I EXCEPT ALODINE AREAS
- ALODINE CLASS 3 PER MIL-DTL-5541

Mach: 3.2 / 1.6 ( )		Part:	
Mat: AL7475 T7351		14.3	
Scale: 1:1	Qty: 1	PROJ.: ET5998-6 CATPart: 040	

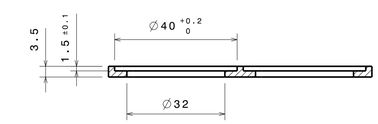

Section view C-C

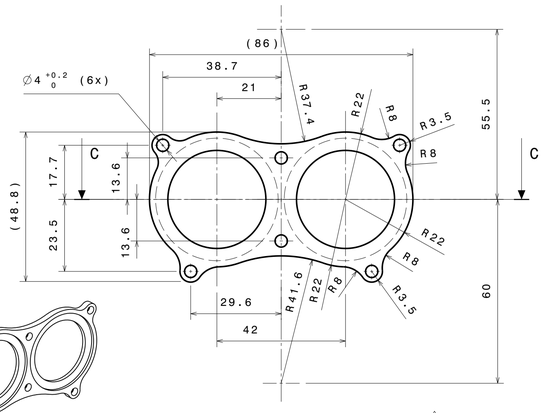

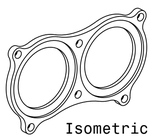

Isometric view

TOLERANCES ±0.2 UNLESS OTHERWISE INDICATED
SURFACE TREATMENT:
- ALODINE CLASS 3 PER MIL-DTL-5541

Mach: 3.2 C		Part:	
Mat: AL7075 T7351		14.2	
Scale: 1:1	Qty: 1	PROJ.: ET5998-6 CATPart: 008	

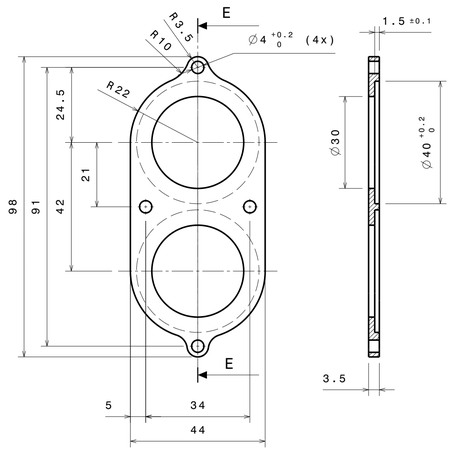

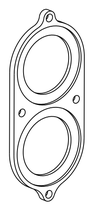

Isometric view

TOLERANCES ±0.2 UNLESS OTHERWISE INDICATED
SURFACE TREATMENT:
- ALODINE CLASS 3 PER MIL-DTL-5541

Mach: 3.2 C		Part:	
Mat: AL7075 T7351		14.4	
Scale: 1:1	Qty: 1	PROJ.: ET5998-6 CATPart: 010	

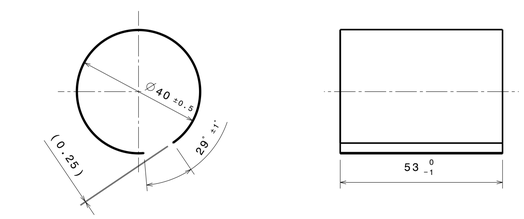

C
SURFACE TREATMENT
ACCORDING AMS 2700 B

DPS

Mach:		Part:	
Mat: AISI 304		14.5	
Scale: 1:1	Qty: 2	PROJ.: ET5998-8 CATPart: –	

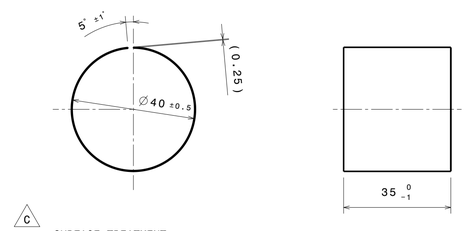

C
SURFACE TREATMENT
ACCORDING AMS 2700 B

APS

Mach:		Part:	
Mat: AISI 304		14.6	
Scale: 1:1	Qty: 2	PROJ.: ET5998-8 CATPart: –	

REMOVE
SHARP EDGES
UNLESS OTHERWISE INDICATED

PART NO.	QTY.	PART	MATERIAL	REMARKS
14.8	–	TAPE, CLEAR ADHESIVE BACKED	FEP/SILICONE	–
14.7	–	PRINTING INK	–	DOMINO BK0101X
14.6	2	PRECISION FOIL, Hasberg-Schneider GmbH	AISI 304	d=0.25mm
14.5	2	PRECISION FOIL, Hasberg-Schneider GmbH	AISI 304	d=0.25mm
14.4	1	APS CLOSE	AL7075 T7351	DIM: 98 x 44 x 3.5
14.3b	4	INSERT	A286	MS21209C0620
14.3a	1	HOUSING	AL7475 T7351	DIM: 105 x 64 x 35.6
14.3	1	APS SUPPORT		
14.2	1	DPS CLOSE	AL7075 T7351	DIM: 86 x 49 x 3.5
14.1b	4	INSERT	A286	MS21209C0620
14.1a	1	HOUSING	AL7475 T7351	DIM: 108 x 56 x 55
14.1	1	DPS SUPPORT		

SCALE: 1:1	NOMINAL DIMENSION			NOMINAL LENGTH OF SHORT ANGLE SIDE		ANGLE DEVIATION	
	LARGER THAN	UNTIL INCL.	TOL	LARGER THAN	UNTIL INCL.	DEG.	mm/100mm
DATE: 2008-02-05	0,5	3	±0,05	–	10	±1°	±1,8
	3	6	±0,05				
DESIGNED:	6	30	±0,1	10	50	±0,5°	±0,9
DRAWN: K. van de Wetering	30	120	±0,15	50	120	±0,3°	±0,5
	120	400	±0,2	120	400	±0,15°	±0,3
CHECKED: G.A. Elbertsen	400	1000	±0,3				
APPROVED: J. v. Es	DRAWING ACCORDING TO DUTCH STANDARDS						PROJECTION

PROJECT: AMS TTCS

SUBJECT:

TTCBS FM: APS & DPS SUPPORT PARTS

NATIONAL AEROSPACE LABORATORY

PROJECT- CHAPTER NO.: ET5998-08		DRW. NO.: 14
SIZE: A1	CATIA DRAWN	ISSUE: F