REV.	DATE	DRAWN	CHECKED	APPR.	DESCRIPTION
B	29-2-2008	PP	KVDW	JVS	Changed: Pos. 19.1, 19.2, 19.20 / Added Pos. 19.23
C	28-4-2008	PP	KVDW	JVS	Changed: Part:19.23 to Part:19.25 Added: Radius to Part:19.25
D	1-9-2008	PP	KVDW	JVS	Modified: Length Pos. 19.6
E	8-9-2008	pp	KVDW	JVS	Removed: Pos. 19.14, 19.13 (pre-heater parts)

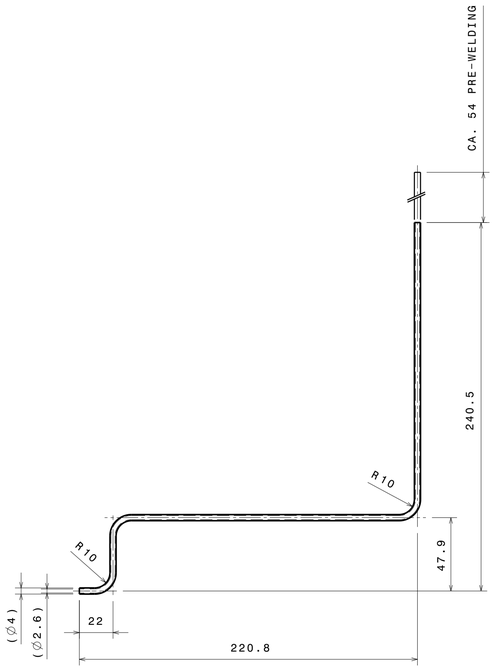

Front view

Mach:		Part: 19.18
Mat: –		
Scale: 1:2	Qty: 1	NLR- –

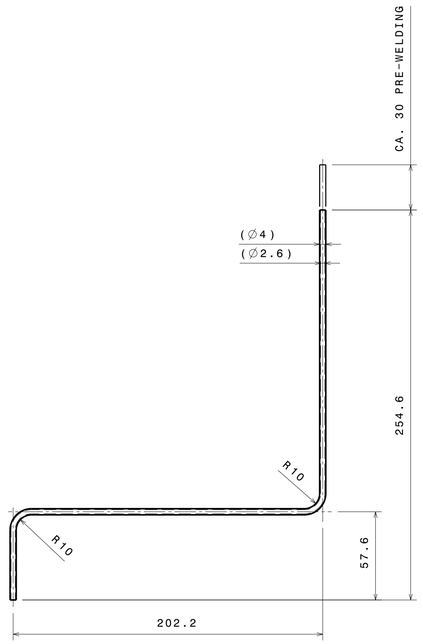

Front view

Mach:		Part: 19.19
Mat: –		
Scale: 1:2	Qty: 1	NLR- –

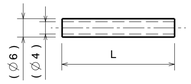

Part	Qty	L
19.1	1	36.7
19.3	1	21.4
19.4	1	14.2
19.5	1	17.4
19.7	1	71.7
19.8	1	47.2
19.11	1	27.9
19.16	1	9.7
19.23	1	18.2
19.24	1	14.1

Mach:		Part: –
Mat: –		
Scale: 1:1	Qty: –	NLR- –

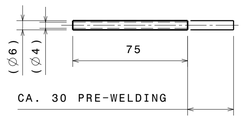

Mach:		Part: 19.6
Mat: –		
Scale: 1:2	Qty: 1	NLR- –

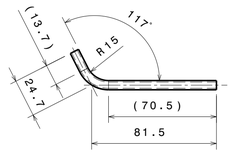

Mach:		Part: 19.25
Mat: –		
Scale: 1:2	Qty: 1	NLR- –

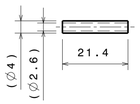

Mach:		Part: 19.9
Mat: –		
Scale: 1:1	Qty: 2	NLR- –

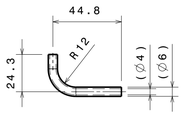

Mach:		Part: 19.10
Mat: –		
Scale: 1:2	Qty: 1	NLR- –

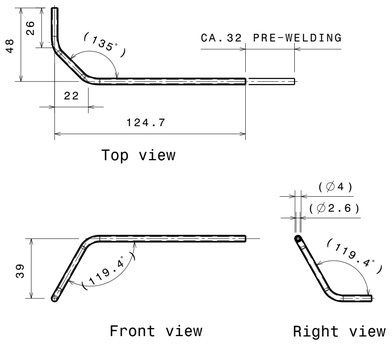

BENDRADIUS: 10mm (2x)

Mach:		Part: 19.12
Mat: –		
Scale: 1:2	Qty: 1	NLR- –

Mach:		Part: –
Mat: –		
Scale: –	Qty: –	NLR- –

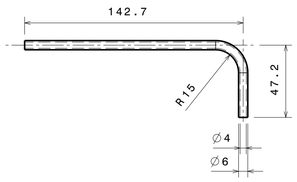

Mach:		Part: 19.2
Mat: –		
Scale: 1:2	Qty: 1	NLR- –

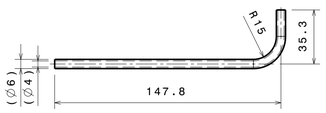

Mach:		Part: 19.15
Mat: –		
Scale: 1:2	Qty: 1	NLR- –

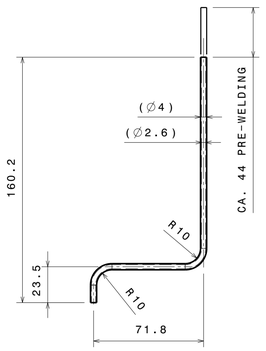

Mach:		Part: 19.17
Mat: –		
Scale: 1:2	Qty: 1	NLR- –

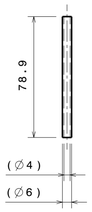

Mach:		Part: 19.20
Mat: –		
Scale: 1:2	Qty: 1	NLR- –

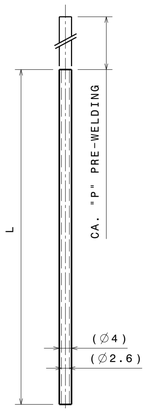

Part	Qty	L	P
19.21	1	109.3	145
19.22	1	157.6	97

Mach:		Part: –
Mat: –		
Scale: 1:1	Qty: 1	NLR- –

NOTE: Tube length is tube length after welding.
Tube cutting needs to account for welding shrinkage.

	NOMINAL DIMENSION			NOMINAL LENGTH OF SHORT ANGLE SIDE		ANGLE DEVIATION	
	LARGER THAN	UNTIL INCL.	TOL	LARGER THAN	UNTIL INCL.	DEG.	mm/100mm
	0,5	3	±0,05	–	10	±1°	±1,8
	3	6	±0,05	10	50	±0,5°	±0,9
	6	30	±0,1	50	120	±0,3°	±0,5
	30	120	±0,15	120	400	±0,15°	±0,3
	120	400	±0,2				
	400	1000	±0,3				
	DRAWING ACCORDING TO DUTCH STANDARDS						PROJECTION

SCALE: –
DATE: 2008-02-05
DESIGNED:
DRAWN: P.PUL
CHECKED: K. van de Wetering
APPROVED: J. VAN ES

TOLERANCES:
LENGTHS ±0.5
RADII ±1

PROJECT: AMS TTCS
SUBJECT:

TTCBS FM: TUBING

MATERIAL: AISI 316L

REMOVE SHARP EDGES
UNLESS OTHERWISE INDICATED

NATIONAL AEROSPACE LABORATORY

PROJECT- CHAPTER NO.: ET5998-08
DRW. NO.: 19
SIZE: A1
CATIA DRAWN
ISSUE: E