| REV. | DATE | DRAWN | CHECKED | APPR. | DESCRIPTION |
|---|---|---|---|---|---|
| B | 23-1-2008 | PP | KVDW | JVS | Changed: Parts 3.1, 3.2 identical to primary side |
| C | 31-1-2008 | PP | KVDW | JVS | Removed: FIT IN PART dimensions |

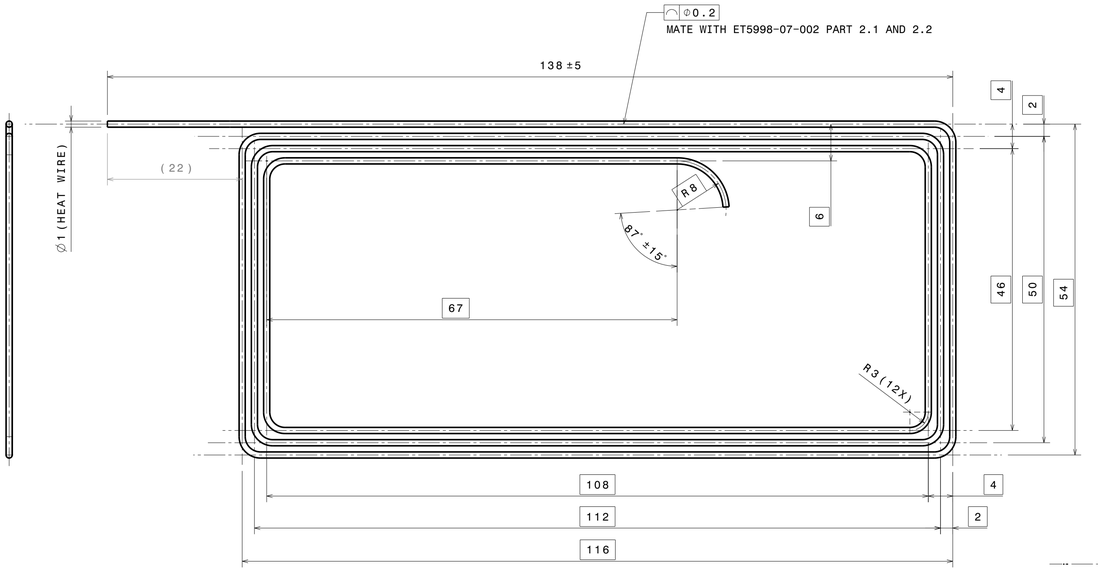


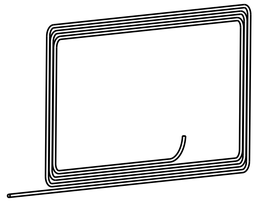

Isometric view

SPECIFICATION HEAT WIRE:
- TYPE: ZEZAc 10/10-104-10/
- MATERIAL: AISI 304
- COLD ENDS 10 CM
- EQUIPED WITH 2 CONNECTORS CM10/CEMENT8
  ENDING IN 200 MM ET1419WHITE AWG 14 ELECTRICAL WIRES
  FOR CONNECTION TO THE TTCB CONNECTOR BLOCK
- SUPPLIER: THERMO COAX

| | | | |
|---|---|---|---|
| Mach: | | Part: 3.1 | |
| Mat: SEE PART LIST | | | |
| Scale: 2:1 | Qty: 2 | PROJ.: ET5998-07 CATPart: | |

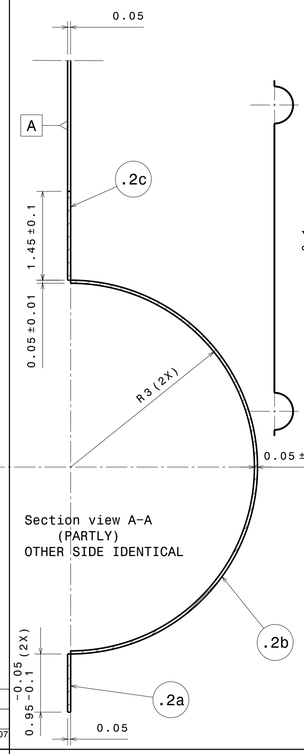


Section view A-A
(PARTLY)
OTHER SIDE IDENTICAL

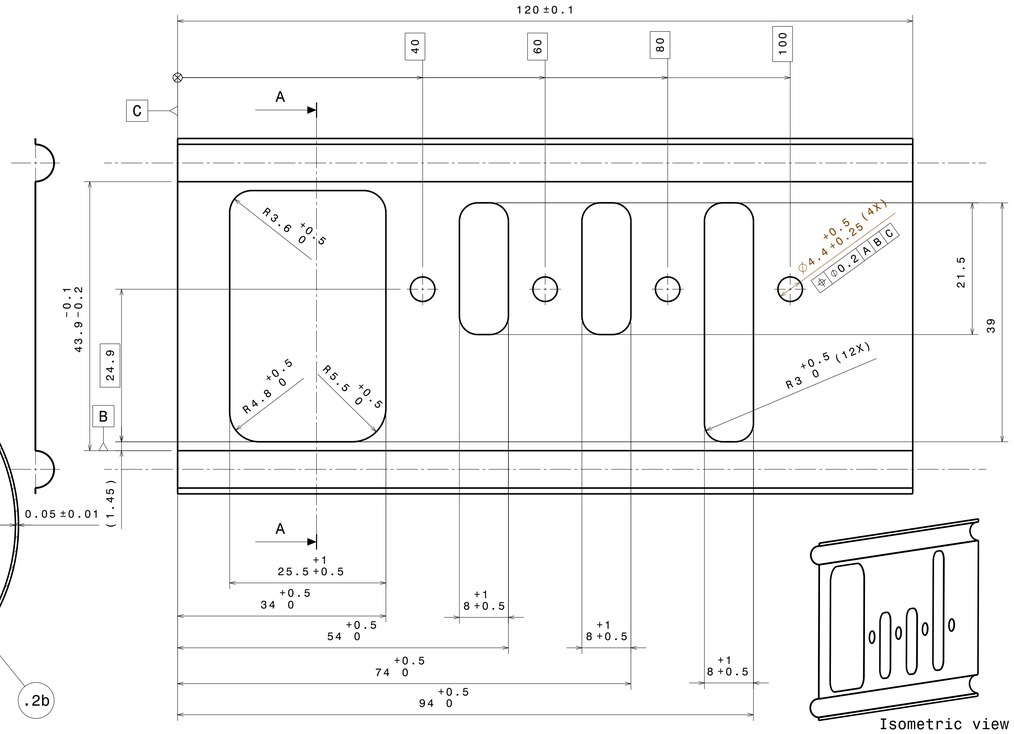




Isometric view

SOLDERING/BRAZING MATERIAL TO BE DEFINED BY SOLDERING COMPANY
MATERIAL SPECIFICATION TO BE SEND TO NLR AND NASA PRIOR TO SOLDERING

| | | | |
|---|---|---|---|
| Mach: | | Part: 3.2 | |
| Mat: T.B.D. | | | |
| Scale: 2:1 | Qty: SEE PART LIST | PROJ.: ET5988-07 CATPart: 001 | |

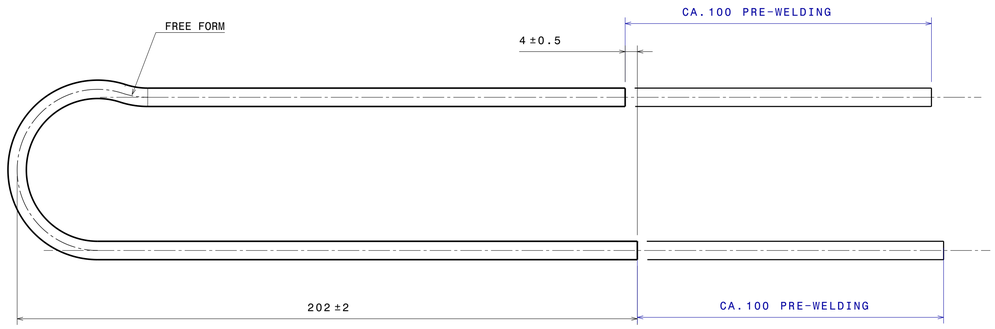


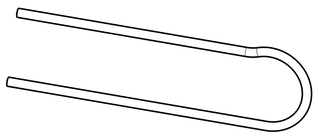

Isometric view[2]

| | | | |
|---|---|---|---|
| Mach: | | Part: 3.3 | |
| Mat: AISI 316L | | | |
| Scale: 1:1 | Qty: 1 | PROJ.: ET5998-07 CATPart: | |

| PART NO. | QTY. | PART | MATERIAL | REMARKS |
|---|---|---|---|---|
| | | | | |
| | | | | |
| .3 | 1 | PIPE | AISI 316L | DIM ∅6 x ∅4, L = 650 |
| .2c | 1 | SOLDER PLATE: MID | T.B.D. | DIM.: 120 X 43.9 THICK 0.05 |
| .2b | 4 | SOLDER PLATE: CILINDRICAL STRIP | T.B.D. | THICK: 0,05 LENGTH: 120<br>FLAT DEVELOPED LENGTH: 9.5MM |
| .2a | 2 | SOLDER PLATE: SIDE STRIP | T.B.D. | DIM.: 120 X 0.95 THICK 0.05 |
| .2 | 1 | SOLDER PLATES | | |
| .1 | 2 | HEAT WIRE DIA 1 | AISI 304 | TYPE: ZEZ Ac 10/10-104-10/<br>SUPPLIER: THEMO COAX |

| | | | | | | | |
|---|---|---|---|---|---|---|---|
| SCALE: 1:1 2:1 | NOMINAL DIMENSION | | | NOMINAL LENGTH OF SHORT ANGLE SIDE | | ANGLE DEVIATION | |
| | LARGER THAN | UNTIL INCL. | TOL | LARGER THAN | UNTIL INCL. | DEG. | mm/100mm |
| DATE: 2008-01-23 | 0,5 | 3 | ±0,05 | | | | |
| | 3 | 6 | ±0,05 | – | 10 | ±1° | ±1,8 |
| DESIGNED: J. HALM | 6 | 30 | ±0,1 | 10 | 50 | ±0,5° | ±0,9 |
| DRAWN: P.PUL | 30 | 120 | ±0,15 | 50 | 120 | ±0,3° | ±0,5 |
| | 120 | 400 | ±0,2 | 120 | 400 | ±0,15° | ±0,3 |
| CHECKED: K. V.D. WETERING | 400 | 1000 | ±0,3 | | | | |
| APPROVED: J. V. ES | DRAWING ACCORDING TO DUTCH STANDARDS | | | | | | PROJECTION |

PROJECT: AMS TTCS

SUBJECT:
TTCBS FM: COLD ORBIT HEATER, PARTS

| | | | |
|---|---|---|---|
| NATIONAL AEROSPACE LABORATORY | PROJECT- CHAPTER NO.: ET5998-12 | | DRW. NO. : 003 |
| | SIZE: A1 | CATIA DRAWN | ISSUE: C |