REV.	DATE	DRAWN	CHECKED	APPR.	DESCRIPTION
A	18-11-2008	PP	KVDW	JVE	Modified: Pos. 5.3, to diam. 5.5

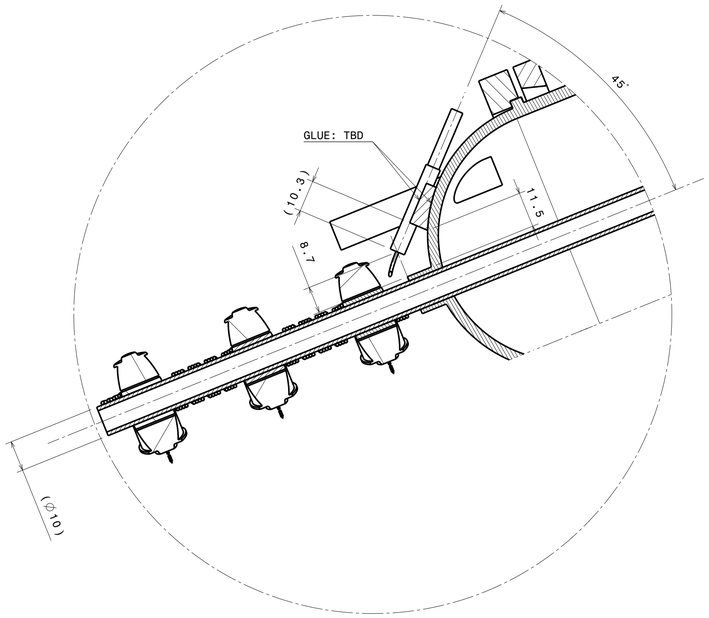

Section view D-D
Scale: 1:1

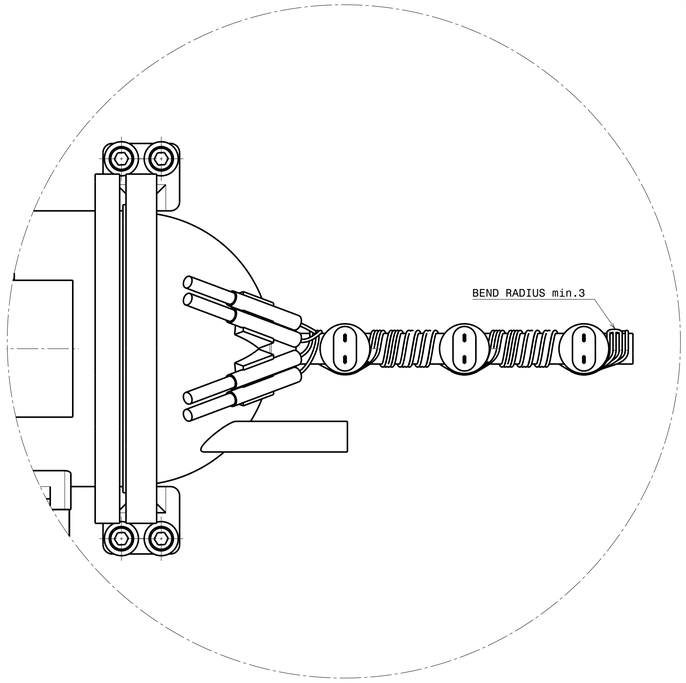

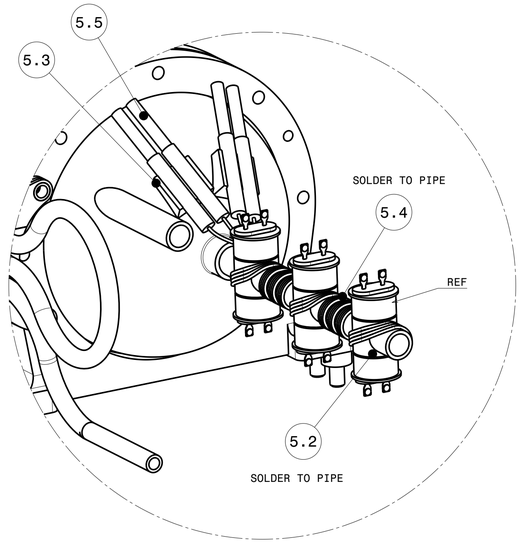

Isometric view

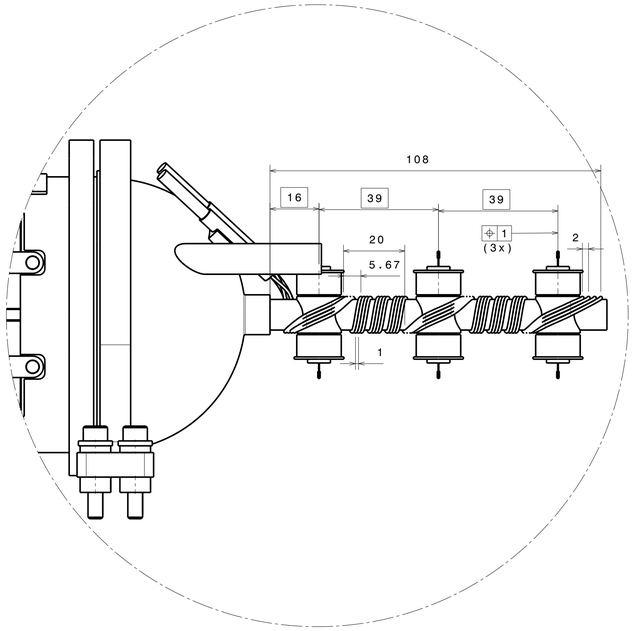

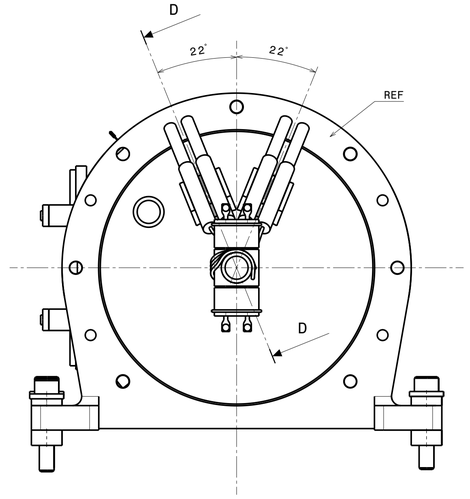

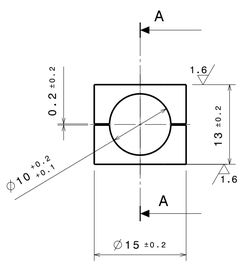

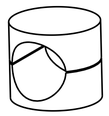

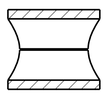

REMOVE
SHARP EDGES
UNLESS OTHERWISE INDICATED

Mach: 3.2 (1.6)		Part: 5.2
Mat: CC-10 (COPPER)		
Scale: 2:1	Qty: 3	PROJ.: ET5998-7 CATPart: 010

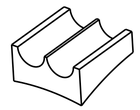

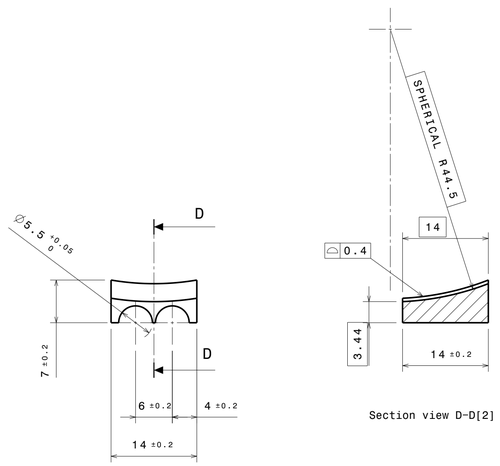

Section view D-D[2]

REMOVE
SHARP EDGES
UNLESS OTHERWISE INDICATED

Mach: 3.2 (1.6)		Part: 5.3
Mat: AISI 304L		
Scale: 2:1	Qty: 1	PROJ.: ET5998-7 CATPart: 009

NOTES
1. TYPE OF SOLDERING PROCES AND SOLDERING MATERIAL TO BE DEFINED BY MANUFACTURER
2. FULL SOLDERING CONTACT OVER WHOLE LENGTH IS REQUIRED

Mach:		Part: 5.1
Mat: –		
Scale: 1:1	Qty: 1	PROJ.: ET5998-8 CATProd: 014

PART NO.	QTY.	PART	MATERIAL	REMARKS
5.5	4	HEAT WIRE CONNECTOR	–	THERMOCOAX CM 10
5.4	2	HEAT WIRE DIA. 1 mm	AISI 304L	THERMOCOAX 1HcAc, HOT LENGTH 746
5.3	2	CONNECTOR SADDLE	AISI 304L	–
5.2	3	PIPE SADDLE	CC-10 (COPPER)	–
5.1	1	ACCU WIRE HEATER ASSY	–	–

		NOMINAL DIMENSION			NOMINAL LENGTH OF SHORT ANGLE SIDE		ANGLE DEVIATION	
		LARGER THAN	UNTIL INCL.	TOL	LARGER THAN	UNTIL INCL.	DEG.	mm/100mm
SCALE:	1:1	0,5	3	±0,05	–	10	±1°	±1,8
DATE:	2008-09-2008	3	6	±0,05	10	50	±0,5°	±0,9
DESIGNED:	P.Pul	6	30	±0,1	50	120	±0,3°	±0,5
DRAWN:	P.Pul	30	120	±0,15	120	400	±0,15°	±0,3
CHECKED:	K. van de Wetering	120	400	±0,2				
APPROVED:	J.van Es	400	1000	±0,3				
		DRAWING ACCORDING TO DUTCH STANDARDS					PROJECTION	

PROJECT: AMS TTCS

SUBJECT:

TTCBS FM: ACCU WIRE HEATER

NATIONAL AEROSPACE LABORATORY

PROJECT- CHAPTER NO.:	DRW. NO. :
ET5998-12	5
SIZE: A1 CATIA DRAWN	ISSUE: A