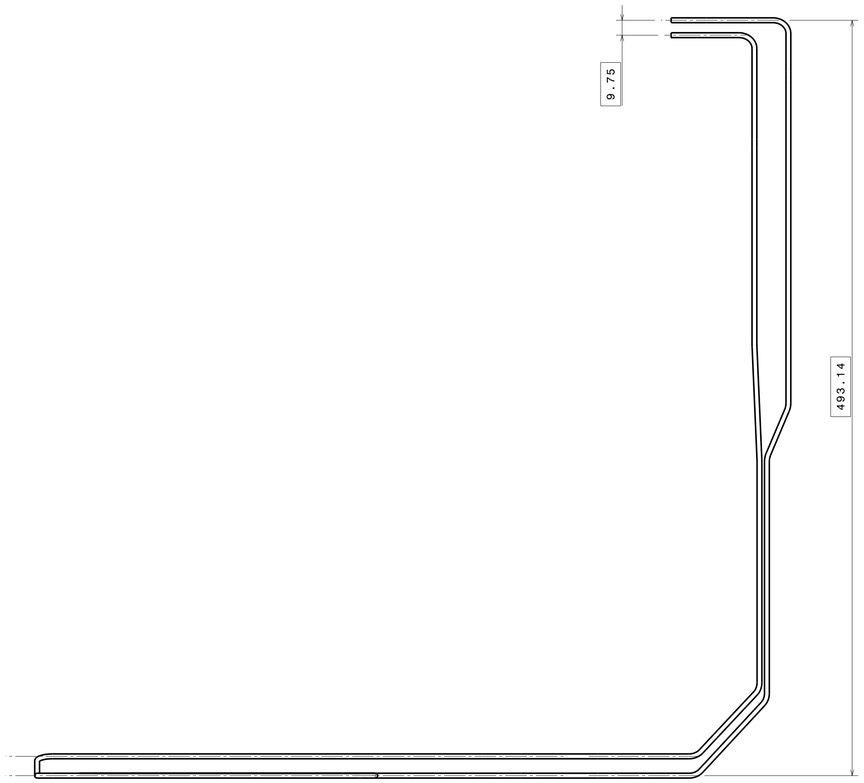

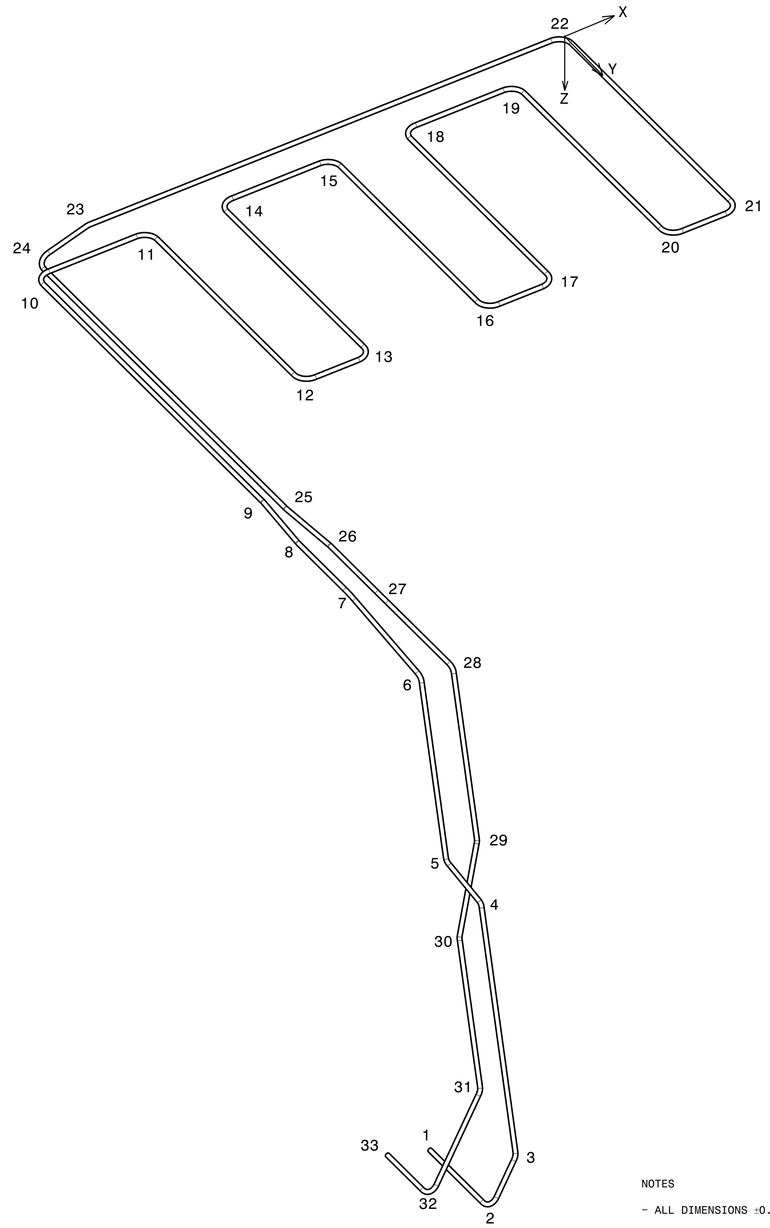

Isometric view

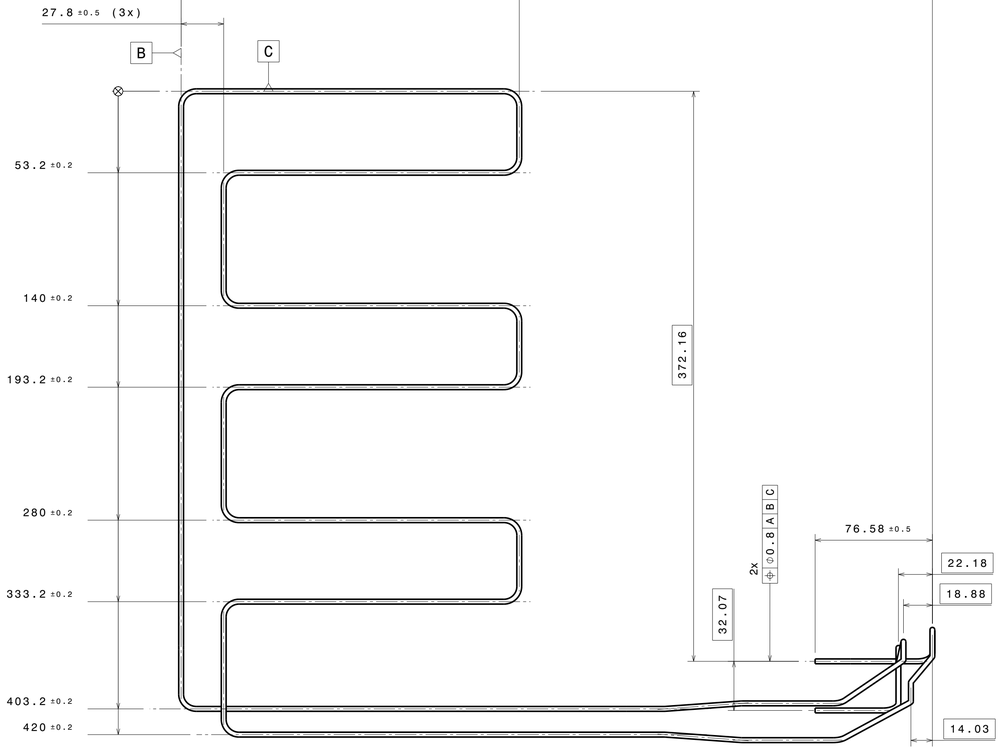

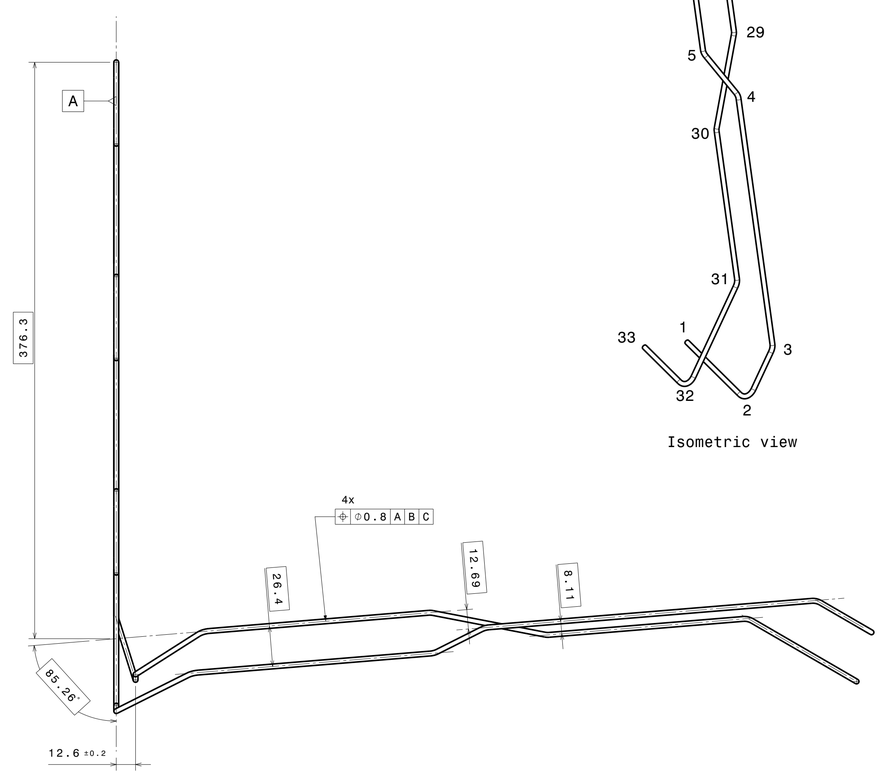

COORDINATES
(INTERSECTION OF CENTER LINES)

CORNER	X	Y	Z
1	-372.16	413.98	493.14
2	-372.16	490.56	493.14
3	-351.33	490.56	457.22
4	-369.09	490.56	240.75
5	-385.78	476.53	207.59
6	-398.74	476.53	49.6
7	-423.6	430.53	0
8	-423.6	365.8	0
9	-420	315.8	0
10	-420	27.8	0
11	-333.2	27.8	0
12	-333.2	220.8	0
13	-280	220.8	0
14	-280	27.8	0
15	-193.2	27.8	0
16	-193.2	220.8	0
17	-140	220.8	0
18	-140	27.8	0
19	- 53.2	27.8	0
20	- 53.2	220.8	0
21	0	220.8	0
22	0	0	0
23	-363.14	0	0
24	-403.2	0	12.6
25	-403.2	315.8	12.6
26	-399.6	365.8	12.6
27	-399.6	430.53	12.6
28	-371.61	471.68	56.52
29	-359.27	471.68	205.41
30	-373.91	468.38	281.27
31	-363.14	468.38	412.52
32	-404.27	468.38	483.39
33	-404.27	413.98	483.39

NOTES

- ALL DIMENSIONS ±0.5 mm UNLESS OTHERWISE INDICATED
- 3D CAD MODEL ET5998-10-PA-006-0
- TUBE DIMENSION:
  OUTER DIAMETER Ø3.15 ±0.05 mm
  WALL THICKNESS 1.1 ±0.1 mm

REMOVE SHARP EDGES
UNLESS OTHERWISE INDICATED

PART NO.	QTY.	PART	MATERIAL	REMARKS
7.1	2	TUBE NO. 2	718-SEAMLESS	L = 3951

		NOMINAL DIMENSION			NOMINAL LENGTH OF SHORT ANGLE SIDE		ANGLE DEVIATION	
SCALE:	1:1	LARGER THAN	UNTIL INCL.	TOL	LARGER THAN	UNTIL INCL.	DEG.	mm/100mm
DATE:	2007-11-09	0,5	3	±0,05				
DESIGNED:	J HALM	3	6	±0,05	-	10	±1°	±1,8
DRAWN:	P.PUL	6	30	±0,1	10	50	±0,5°	±0,9
CHECKED:	G.A ELBERTSEN	30	120	±0,15	50	120	±0,3°	±0,5
APPROVED:	J. VAN ES	120	400	±0,2	120	400	±0,15°	±0,3
		400	1000	±0,3				
		DRAWING ACCORDING TO DUTCH STANDARDS						PROJECTION

PROJECT: AMS TTCS

SUBJECT:

SW & PR CONDENSOR FM: TUBE NO. 2

NATIONAL AEROSPACE LABORATORY

PROJECT- CHAPTER NO.: ET5998-10

DRW. NO. : 7

SIZE: A1 | CATIA DRAWN | ISSUE: