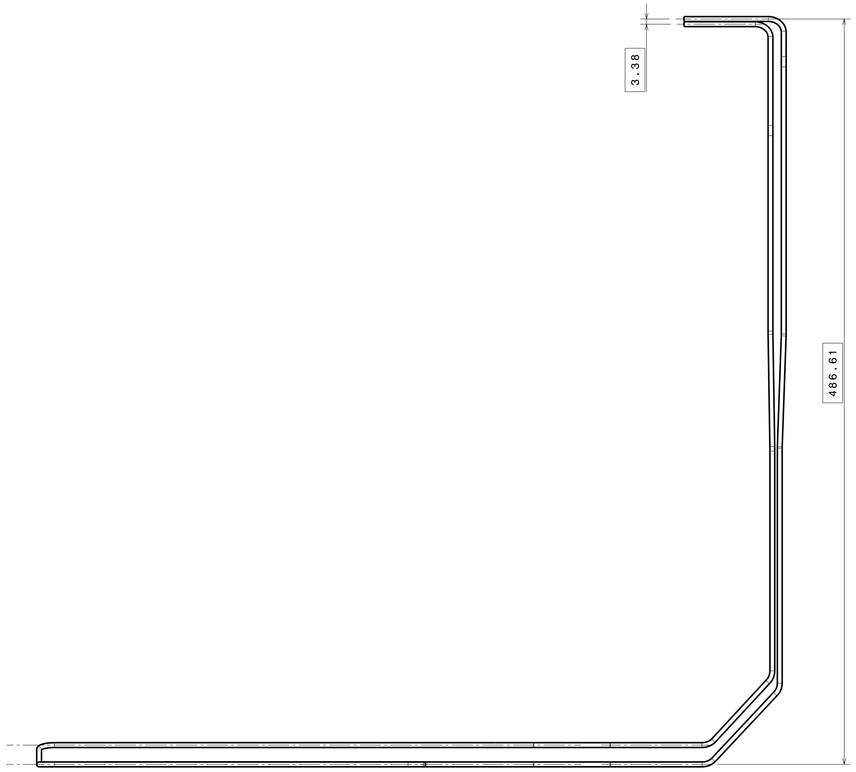

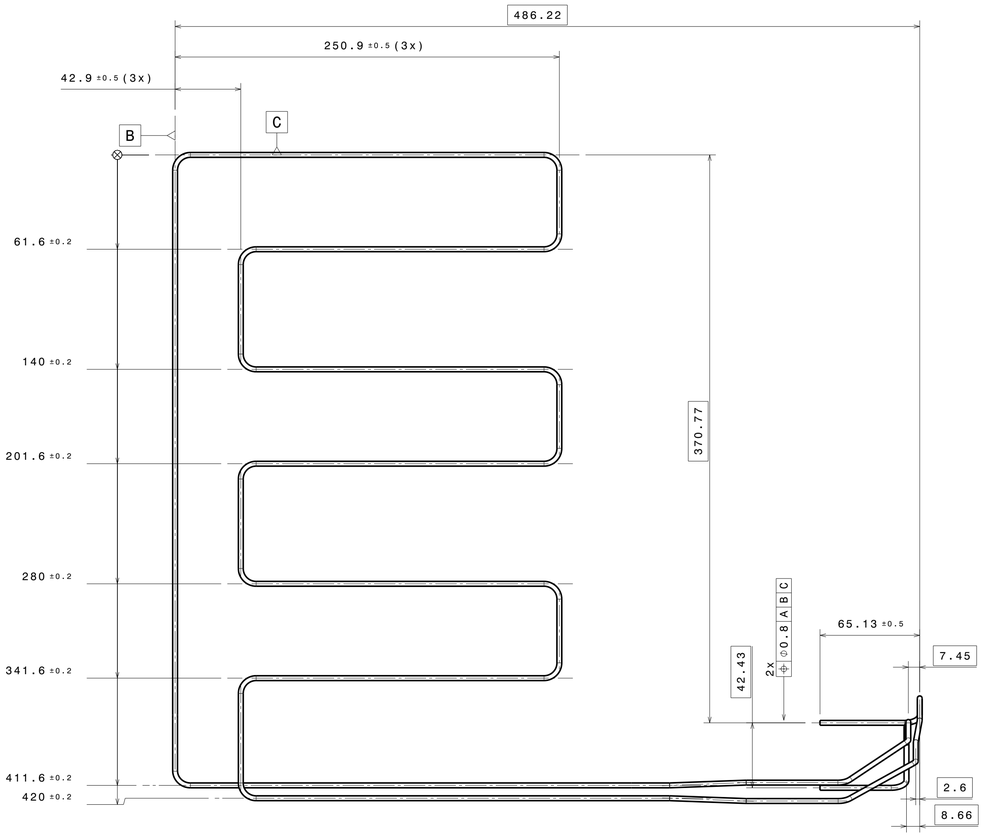

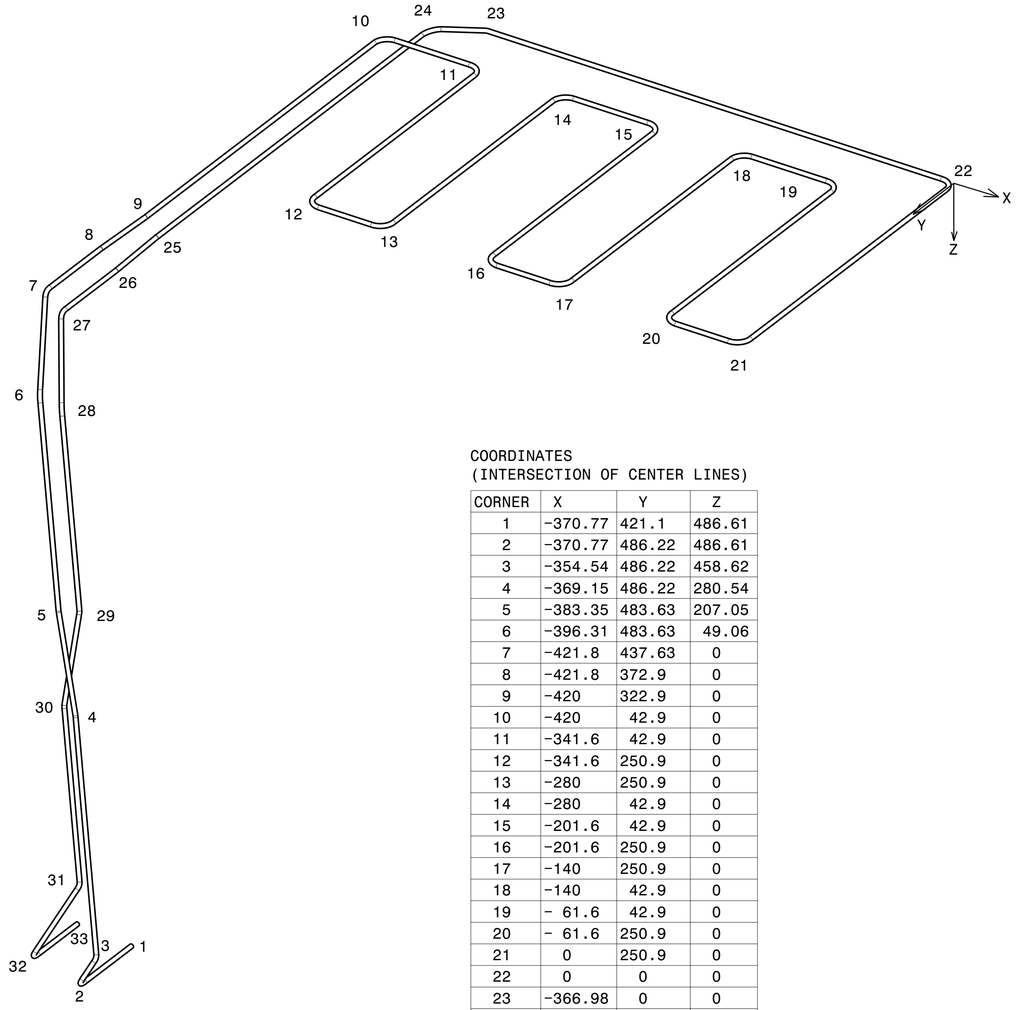

Isometric view

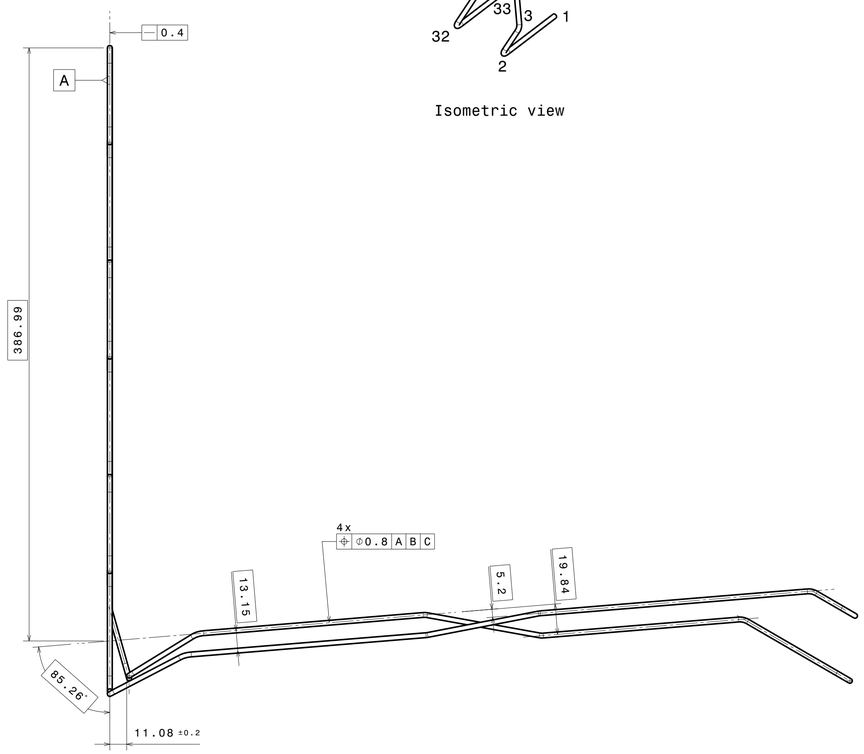

COORDINATES
(INTERSECTION OF CENTER LINES)

CORNER	X	Y	Z
1	-370.77	421.1	486.61
2	-370.77	486.22	486.61
3	-354.54	486.22	458.62
4	-369.15	486.22	280.54
5	-383.35	483.63	207.05
6	-396.31	483.63	49.06
7	-421.8	437.63	0
8	-421.8	372.9	0
9	-420	322.9	0
10	-420	42.9	0
11	-341.6	42.9	0
12	-341.6	250.9	0
13	-280	250.9	0
14	-280	42.9	0
15	-201.6	42.9	0
16	-201.6	250.9	0
17	-140	250.9	0
18	-140	42.9	0
19	- 61.6	42.9	0
20	- 61.6	250.9	0
21	0	250.9	0
22	0	0	0
23	-366.98	0	0
24	-411.6	0	12.6
25	-411.6	322.9	12.6
26	-409.8	372.9	12.6
27	-409.8	437.63	12.6
28	-382.44	478.78	57.06
29	-370.1	478.78	205.96
30	-383.74	477.57	281.74
31	-372.92	477.57	413.74
32	-413.2	477.57	483.23
33	-413.2	421.1	483.23

NOTES

- ALL DIMENSIONS ±0.5 mm UNLESS OTHERWISE INDICATED
- 3D CAD MODEL ET5998-10-PA-007-0
- TUBE DIMENSION:
  OUTER DIAMETER ⌀3.15 ±0.05 mm
  WALL THICKNESS 1.1 ±0.1 mm

REMOVE
SHARP EDGES
UNLESS OTHERWISE INDICATED

PART NO.	QTY.	PART	MATERIAL	REMARKS
8.1	2	TUBE NO. 3	718-SEAMLESS	L = 4040

		NOMINAL DIMENSION			NOMINAL LENGTH OF SHORT ANGLE SIDE		ANGLE DEVIATION	
		LARGER THAN	UNTIL INCL.	TOL	LARGER THAN	UNTIL INCL.	DEG.	mm/100mm
DATE:	2007-11-09	0,5	3	±0,05	-	10	±1°	±1,8
DESIGNED:	J HALM	3	6	±0,05	10	50	±0,5°	±0,9
DRAWN:	P.PUL	6	30	±0,1	50	120	±0,3°	±0,5
CHECKED:	G.A. ELBERTSEN	30	120	±0,15	120	400	±0,15°	±0,3
APPROVED:	J. VAN ES	120	400	±0,2				
		400	1000	±0,3				
		DRAWING ACCORDING TO DUTCH STANDARDS					PROJECTION	

SCALE: 1:1

PROJECT: AMS TTCS

SUBJECT:

SW & PR CONDENSOR FM: TUBE NO. 3

NATIONAL AEROSPACE LABORATORY

PROJECT- CHAPTER NO.: ET5998-10

DRW. NO.: 8

SIZE: A1 | CATIA DRAWN | ISSUE: —