REV.	DATE	DRAWN	CHECKED	APPR.	DESCRIPTION
A	29-2-2008	PP	KVDW	JVS	Added: alodine areas

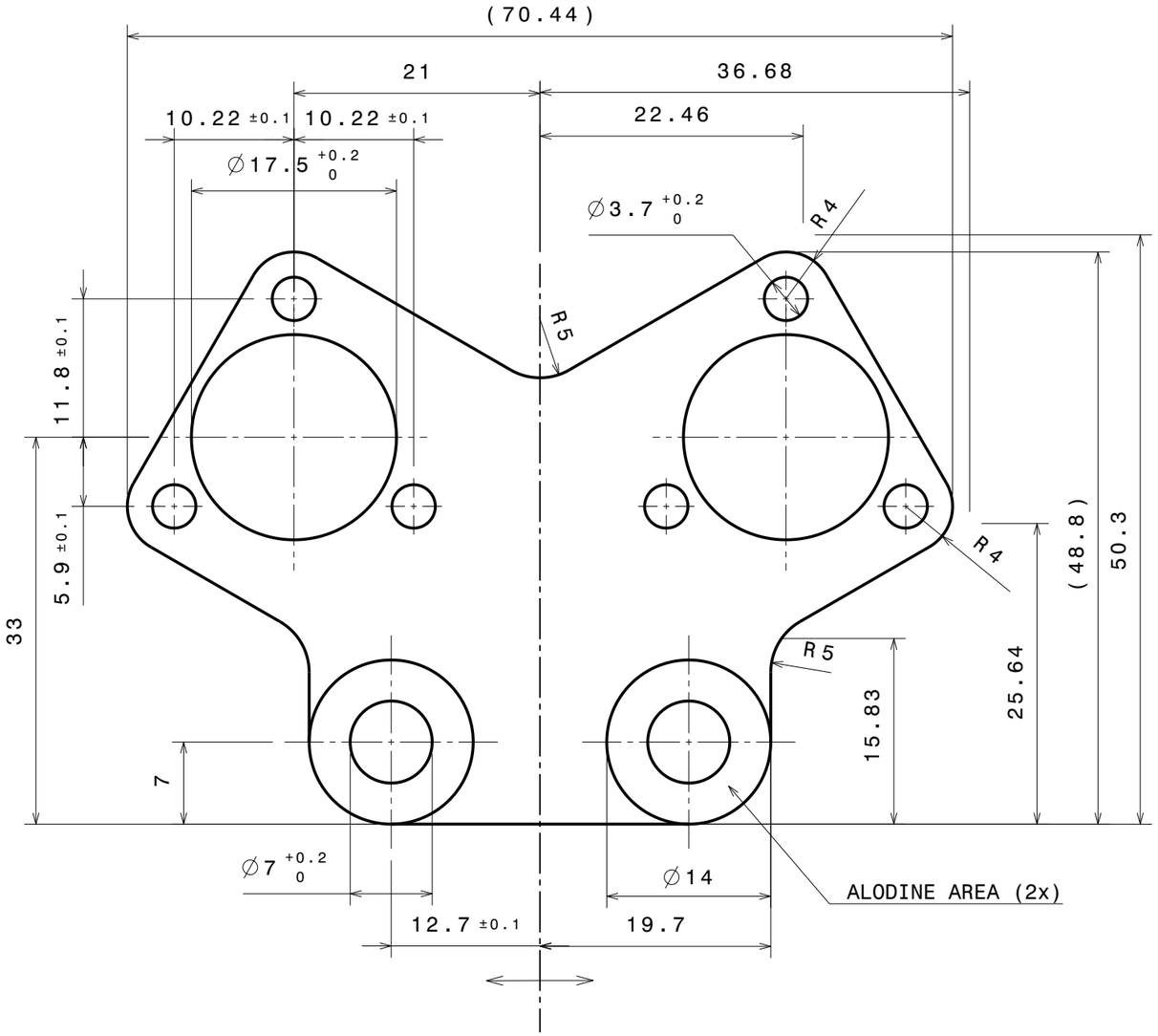

PART IS SYMMETRICAL

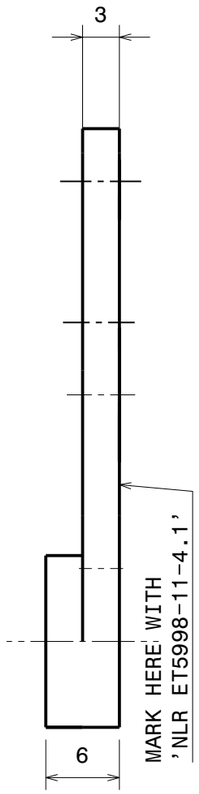

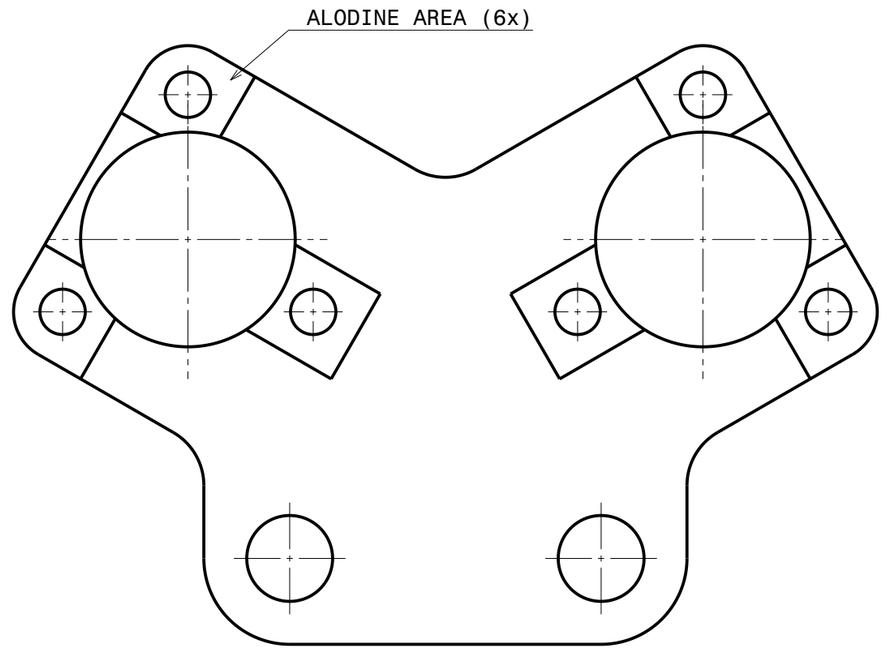

SURFACE TREATMENT:
- ANODIZE PER MIL-A-8625 TYPE I EXCEPT ALODINE AREAS (COVERED BY TAPE)
- ALODINE CLASS 3 PER MIL-DTL-5541

PART NO.	QTY.	PART	MATERIAL	REMARKS
4.1	4	BRACKET	AL 7075 T7351	DIM: 70 X 50 X 5

		NOMINAL DIMENSION			NOMINAL LENGTH OF SHORT ANGLE SIDE		ANGLE DEVIATION	
SCALE:	1:1	LARGER THAN	UNTIL INCL.	TOL	LARGER THAN	UNTIL INCL.	DEG.	mm/100mm
DATE:	2007-05-03	0,5	3	±0,05				
DESIGNED:	J. HALM	3	6	±0,05	-	10	±1°	±1,8
		6	30	±0,1	10	50	±0,5°	±0,9
DRAWN:	K. VD. WETERING	30	120	±0,15	50	120	±0,3°	±0,5
CHECKED:	G. ELBERTSEN	120	400	±0,2	120	400	±0,15°	±0,3
		400	1000	±0,3				
APPROVED:	J. VAN ES	DRAWING ACCORDING TO DUTCH STANDARDS						

PROJECTION

PROJECT: AMS TTCS

SUBJECT:

MANIFOLD BRACKET FM

MACHINING: 3.2

TOLERANCES ±0.2 UNLESS OTHERWISE INDICATED

NATIONAL AEROSPACE LABORATORY

PROJECT- CHAPTER NO.: ET5998-11

DRW. NO. : 4

SIZE: A3 | CATIA DRAWN | ISSUE: A