REV.	DATE	DRAWN	CHECKED	APPR.	DESCRIPTION
e	5-10-2007	GE	JdK	JvE	PROJECT NAME CHANGED
f	31-1-2008	PP	GE	JVS	Modified labeling
g	7-4-2008	GE	JdK	JvE	CHAMFER (1,63 X 5 DEGREE + ***) ADDED AT WELDING SIDE + 2 PIPE LENGTHS 24 IN STEAD OFF 25
h	4-8-2008	PP	GE	JvE	Modified: Groove radius R0.5 to R0.55
i	10-9-2008	PP	GE	JvE	Removed: turning pads / Added: groove per nc-data

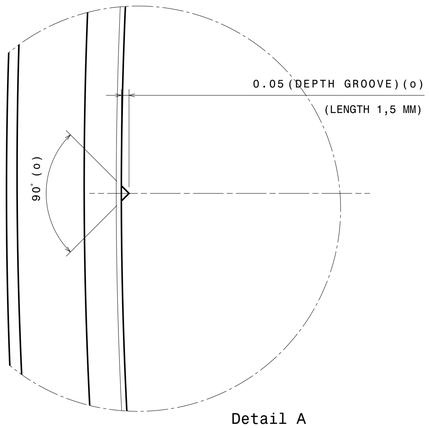

Detail A
SCALE 50:1

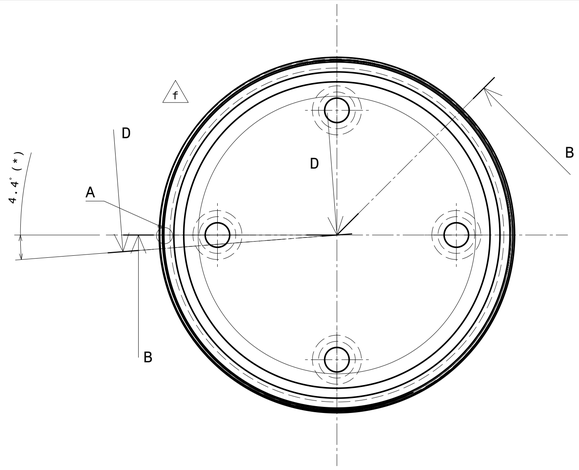

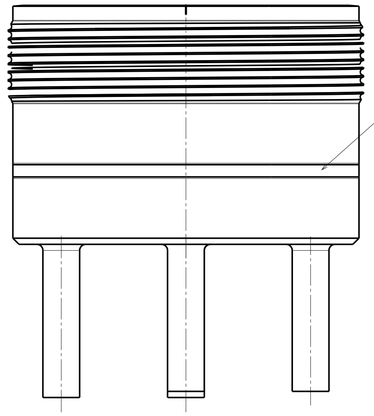

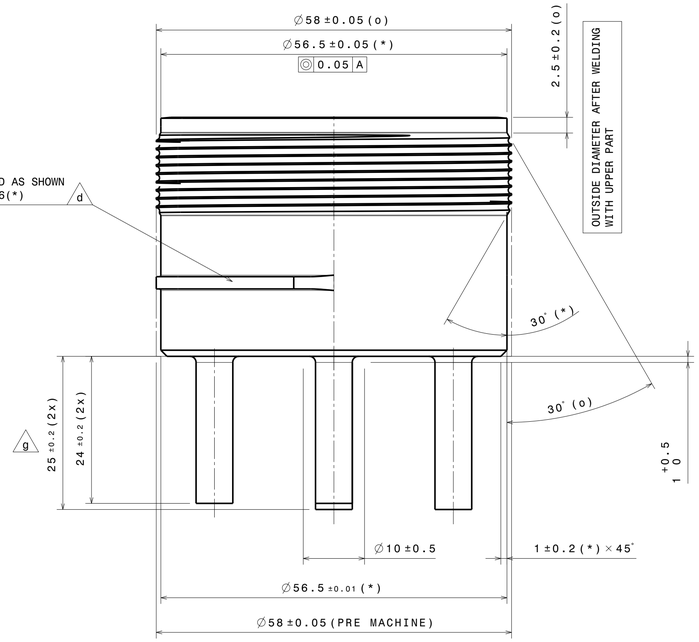

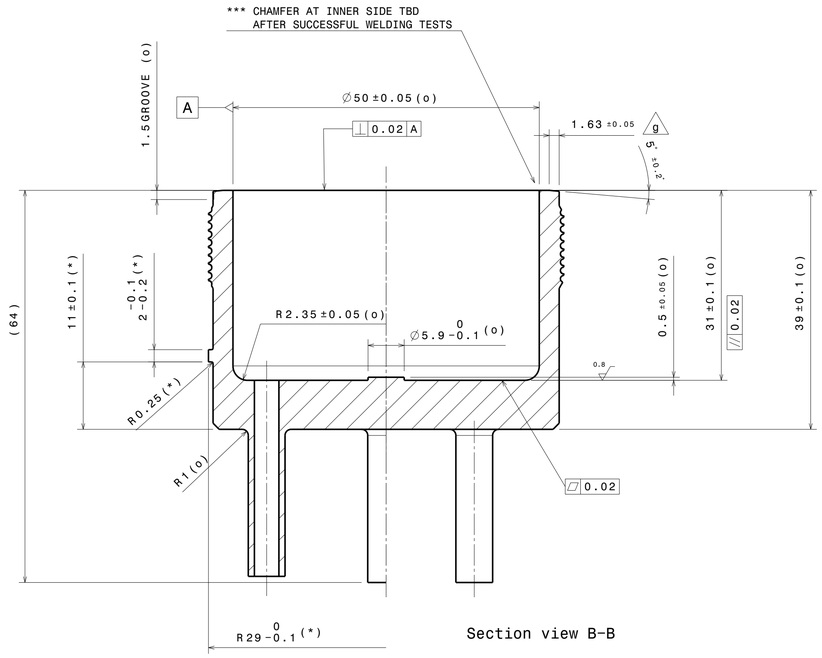

Section view B-B

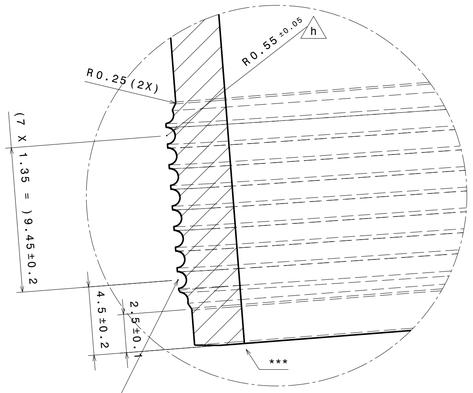

Section view D-D
(5:1)

DEFINITION POINT HELIX ON CYLINDER
DIA.58 (BASED UPON NOMINAL
SHAPE HELIX). MACHINE HELIX PER NC-DATA
AFTER WELDING (*). i

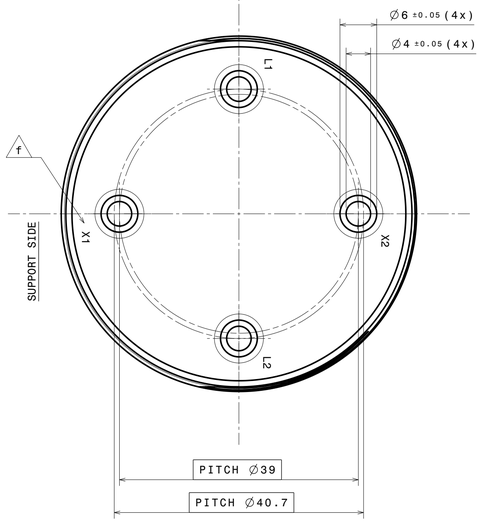

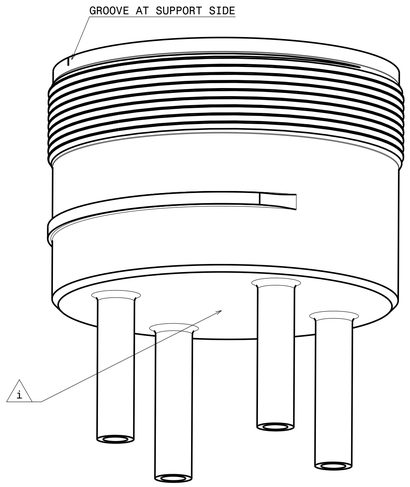

Isometric view
(scale 1:2)

REMARKS;
(o) MEANS: MACHINE BEFORE ASSEMBLY
PHASE 5. SEE
ET6029-05-27 AND 32
(*) MEANS: MACHINE AFTER WELDING
TOGETHER WITH PART 13.1
SEE ET6029-05-29 PHASE 6
(***) MEANS: CHAMFER AT INNER SIDE TBD
AFTER SUCCESSFUL WELDING TESTS

REMOVE
SHARP EDGES
UNLESS OTHERWISE INDICATED

Mach: 1.6 0.8		Part:	h
Mat: INCONEL 625		14.1	
Scale: 1:1	Qty: 1	PROJ. ET6029-05 PART NR: 010	

SCALE: 2:1 5:1 50:1	NOMINAL DIMENSION			NOMINAL LENGTH OF SHORT ANGLE SIDE		ANGLE DEVIATION	
	LARGER THAN	UNTIL INCL.	TOL			DEG.	mm/100mm
DATE: 2005-05-02	0,5	3	±0,05	LARGER THAN	UNTIL INCL.		
	3	6	±0,05	–	10	±1°	±1,8
DESIGNED: J.C.de KRUIJK	6	30	±0,1	10	50	±0,5°	±0,9
DRAWN: J.C.de KRUIJK	30	120	±0,15	50	120	±0,3°	±0,5
	120	400	±0,2	120	400	±0,15°	±0,3
CHECKED: J.HALM	400	1000	±0,3				
APPROVED: G. van DONK	DRAWING ACCORDING TO DUTCH STANDARDS					PROJECTION	

PROJECT: AMS HEAT EXCHANGER FM SECONDARY LOOP

SUBJECT: HOUSING LOWER PART

NATIONAL AEROSPACE LABORATORY

PROJECT- CHAPTER NO.:	DRW. NO. :
ET6029-05	14
SIZE: A1 CATIA DRAWN	ISSUE: i