1. PROJECT CODE	2. JPIC CODE	AMS-02 TASK SHEET (ATS)
SA-AMS	AMS	

3. TYPE				4. ATS NO.	5. PAGE
A	CONFIGURATION CHANGE		☒	TTCS-090908-01	1 OF 36
	PERMANENT	☒ TEMPORARY	☐	6. MOD SHEET(S) NUMBER(S)	
B	NONCONFIGURATION CHANGE		☐	R1	

10. PART NAME	11. Sub Detector Name	12. SERIAL/LOT NO.
TTCB-P & TTCB-S	TTCS	NA

14. APPLICABLE DOCUMENTS

18. ATS TITLE
TTCB BOXES INSTALLATION

20. OPER SEQ. NO.	21. OPERATIONS (Print, Type, or Write Legibly)	VERIFICATION 22. TECH	23. QA/DV
	NOTE CAUTION WARNING **THIS ATS COVERS THE INTEGRATION STEPS NEEDED FOR THE INSTALLATION OF THE TTCS-CONDENSERS** **This ATS authorized lifting operation. All safety regulations and procedures shall be followed.** **Proper Personal Protection Equipment (PPE) is required for the operations. See the CERN/SCL safety regulations and instructions.** **No personal equipment shall be brought within the TTCS storage area and/or within the AMS02 assembly area, during the integration; for example: mobile phone, money, key and all items not identified as integration tools.** The purpose of this ATS is to specify the TTCB-P & TTCB-S installation that will be done at CERN. The Project Engineer J.van Es (NASA, JS or Tracker/TTCS) has the option to reorder steps on site as required.		

24. ORIGINATOR	DATE	25. FINAL ACCEPTANCE STAMP AND DATE
J. van Es(NLR)/E. Laudi (INFN)		

APPROVALS *(Printed or Typed and Signed)*

26. PROJECT ENGINEER	DATE	27. QUALITY ENGINEER	DATE
J. van Es (NLR)			
28. C.Gargiulo (INFN)		29. A.Pauw (NLR)	
30.		31.	

WARNING

STANDARD AND SPECIAL TOOLS

For the hardware installation a standard tool shall be used. Where the use of standard tooling is not possible, special tool may be employed. Each special tool has to be identified with its Drawing Number marked, in indelible way, on the same tool. All the tools have to be clean and free from dust and grease. For the present installation only standard tools are needed.

RUNNING TORQUE MEASUREMENT

This value is an output from Specification MIL-I-45914A see below table.

MIL-I-45914A

TABLE I. Internal thread self-locking torque (inch-pounds).

Insert Internal Thread Fine or Coarse	Maximum Locking Torque	Minimum Breakaway Torque
.086	2.5	.2
.112	5	.5
.138	10	1.0
.164	15	1.5
.190	18	2.0
.250	30	3.5
.3125	60	6.5
.375	80	9.5
.4375	100	14.0
.500	150	18.0
.5625	200	24.0
.625	300	32.0
.750	400	50.0
.875	600	70.0
1.000	800	90.0

Table 1: Running torque values according to MIL-I-45914A

Since it is a continuous torque it is necessary to measure it with an analogical torque wrench, obtaining the maximum torque applied during this operation.
The Locking Torque value has to be written in the relative box in the Integration Procedure Table and added to the Seating Torque required in the structural analysis, and listed in Appendix C.

AMS-02 TASK SHEET (ATS) CONTINUATION PAGE	4. ATS NO.	TTCS-090908-01
	6. MOD NO.	R1

20. OPER SEQ. NO.	21. OPERATIONS (Print, Type, or Write Legibly)	VERIFICATION 22. TECH	23. QA/DV

The following Step by Step procedure, have to be followed for all the fittings to be used for the TTCB-P and TTCB-S installation.

STEP	OPERATION
1	Clean screws, nuts and washers in an Isopropyl Alcohol bath
2	Let screws, nuts and washers dry on a clean towel
3	Remove protecting tape from I/F areas
4	Perform a screws, nuts and washers visual Inspection to check if any non conformance is present
5	Install the part on the AMS02 hardware and tight by hand (or using an appropriate L-shape wrench/ Hex Tip screwdriver), screws and nuts
6	Measure the Locking Torque and register the value in this ATS

FINAL INSTALLATION TORQUE MEASUREMENT

Final Torque to be applied to each screw is the result of the sum of the Locking Torque (measured) and the Seating Torque prescribed from the structural analysis (and reported also on the assembly drawing).The entire torque shall be applied using calibrated torque wrench

TORQUE (T) = SEATING TORQUE (ST) + LOCKING TORQUE (RT)

- SEATING TORQUE (from structural analysis)
- LOCKING TORQUE (measured)

LUBRICATION:

All the **flight** fasteners shall be installed in LUBRICATED condition (according to the structural analysis) (see also Appendix)

AMS-02 TASK SHEET (ATS) CONTINUATION PAGE	4. ATS NO.	TTCS-090908-01
	6. MOD NO.	R1

20. OPER SEQ. NO.	21. OPERATIONS (Print, Type, or Write Legibly)	VERIFICATION 22. TECH	VERIFICATION 23. QA/DV

NOTES:

1) This ATS will not cover the following items.

	ATS/Procedure number
TTCS Helium leak test procedure	AMSTR-NLR-PR-070
TTCS Proof pressure procedure	AMSTR-NLR-PR-071
FM_TTCB_Filling_and_venting_procedure	AMSTR-SYSU-PR-024
TTCB and condenser tube cutting procedure iss04	AMSTR-NLR-PR-008
TTCS_Grounding_verifications	AMSTR-NLR-PR-072
TTCB and condenser integration welding into TTCS-loops	AMSTR-NLR-PR-067
TTCB_Functional_check_procedure	AMSTR-NLR-PR-027
Off-line weld procedure inlet/pinch tubes	AMSTR-NLR-PR-073
TTCS Pinch and close procedure	AMSTR-NLR-PR-074
Drawing Package TTCB-Primary	ET5998-06-DRP- TTCB-PRIMARY-FM
Drawing Package TTCB-Secondary	ET5998-08-DRP-TTCB-SECONDARY-FM

1) This ATS includes TTCB-primary and TTCB-Secondary installation

AMS-02 TASK SHEET (ATS) CONTINUATION PAGE	4. ATS NO.	TTCS-090908-01
	6. MOD NO.	R1

20. OPER SEQ. NO.	21. OPERATIONS (Print, Type, or Write Legibly)	VERIFICATION 22. TECH	23. QA/DV
1.	**Open this ATS** NOTE: the following note and pictures shall be used as reference during the step by step procedure.		

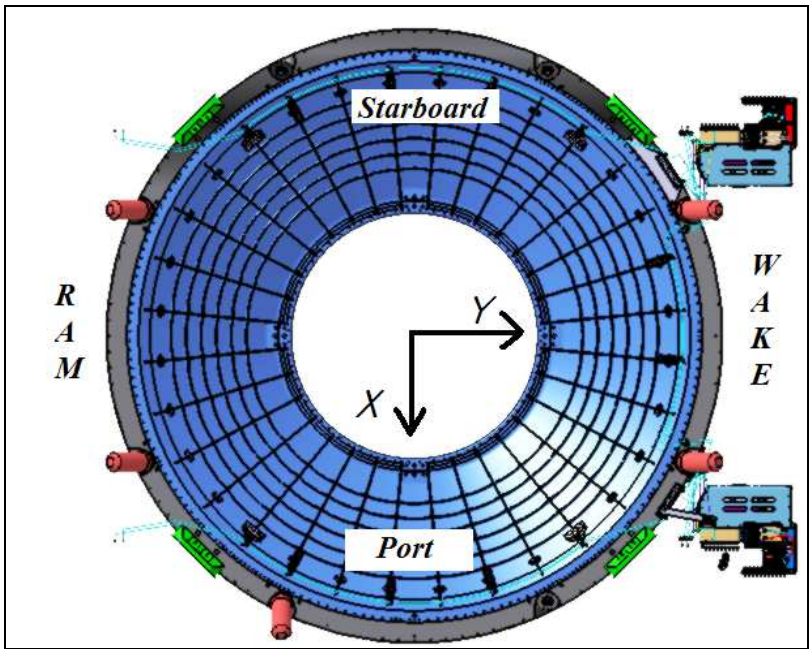

Figure 1: general AMS reference system

AMS-02 TASK SHEET (ATS) CONTINUATION PAGE	4. ATS NO.	TTCS-090908-01
	6. MOD NO.	R1

20. OPER SEQ. NO.	21. OPERATIONS (Print, Type, or Write Legibly)	VERIFICATION 22. TECH	23. QA/DV

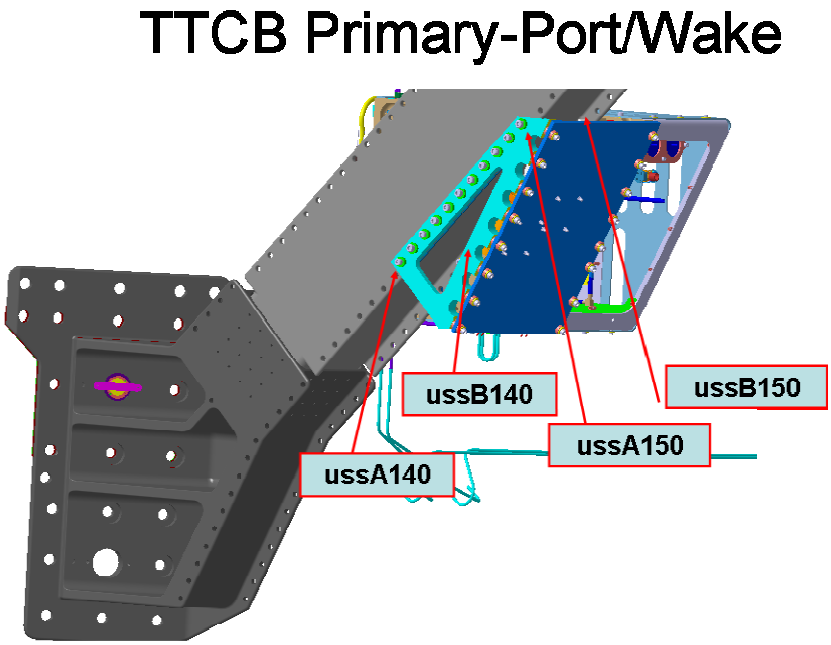

Figure 2: Primary TTCB location on USS

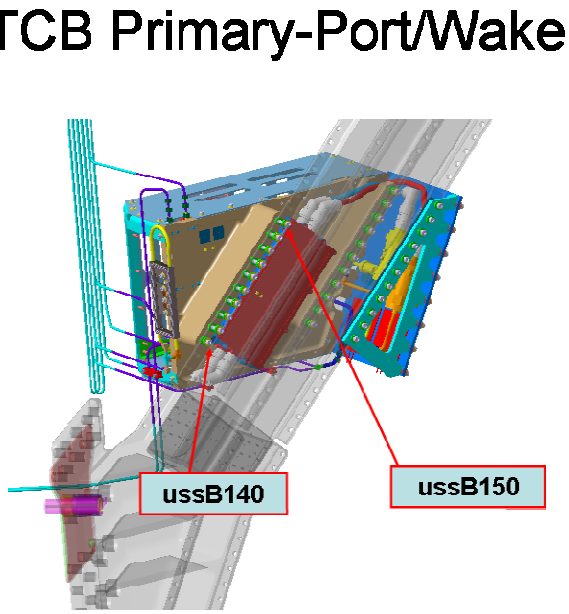

Figure 3: Primary TTCB location on USS

AMS-02 TASK SHEET (ATS) CONTINUATION PAGE	4. ATS NO.	TTCS-090908-01
	6. MOD NO.	R1

20. OPER SEQ. NO.	21. OPERATIONS (Print, Type, or Write Legibly)	VERIFICATION 22. TECH	23. QA/DV

TTCB Primary-Port/Wake

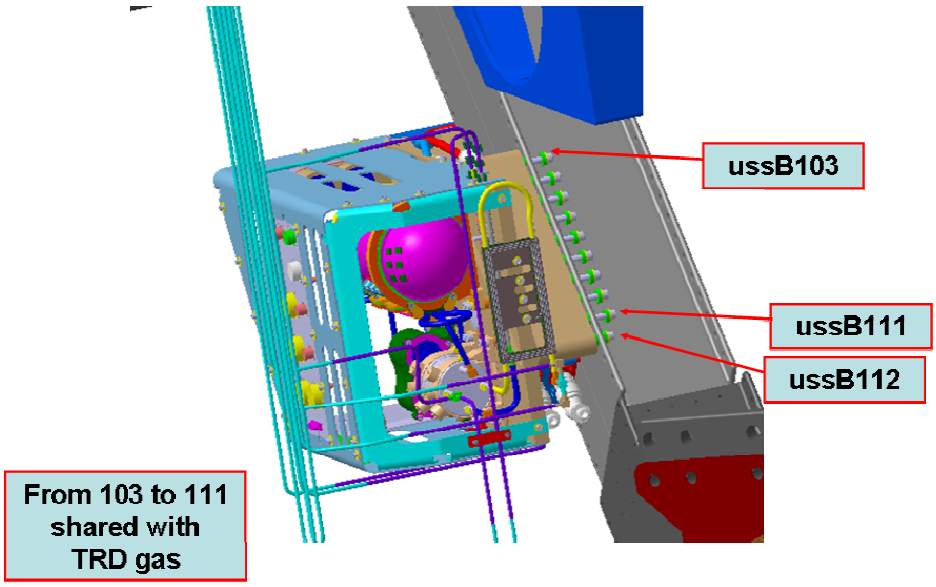

Figure 4: Primary TTCB location on USS

AMS-02 TASK SHEET (ATS) CONTINUATION PAGE	4. ATS NO.	TTCS-090908-01
	6. MOD NO.	R1

20. OPER SEQ. NO.	21. OPERATIONS (Print, Type, or Write Legibly)	VERIFICATION 22. TECH	23. QA/DV

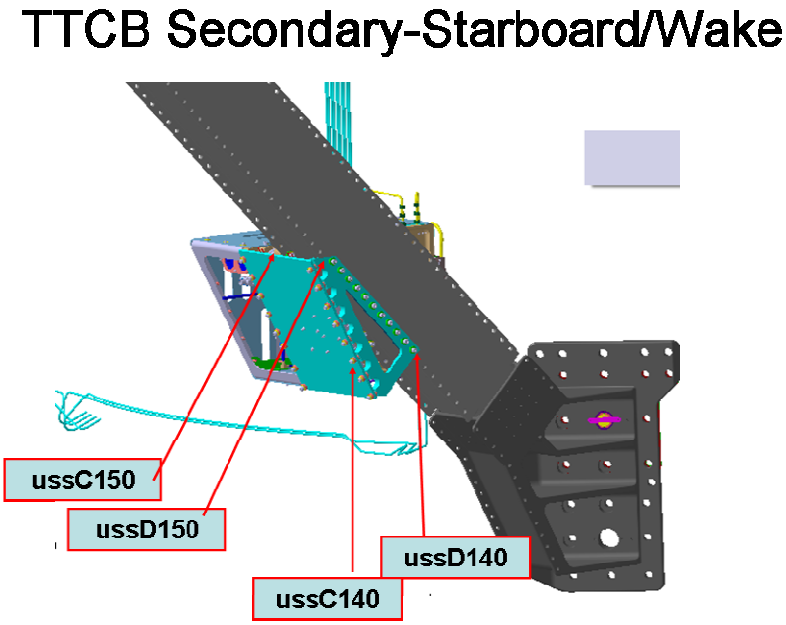

Figure 5: Secondary TTCB location on USS

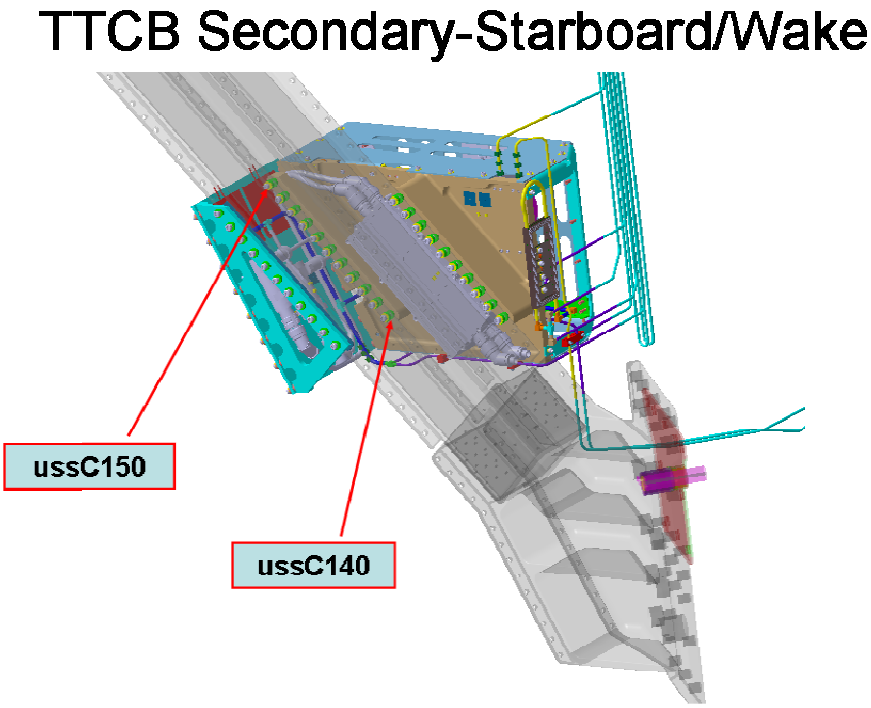

Figure 6: Secondary TTCB location on USS

AMS-02 TASK SHEET (ATS) CONTINUATION PAGE	4. ATS NO.	TTCS-090908-01
	6. MOD NO.	R1

20. OPER SEQ. NO.	21. OPERATIONS (Print, Type, or Write Legibly)	VERIFICATION 22. TECH	23. QA/DV

TTCB Secondary-Starboard/Wake

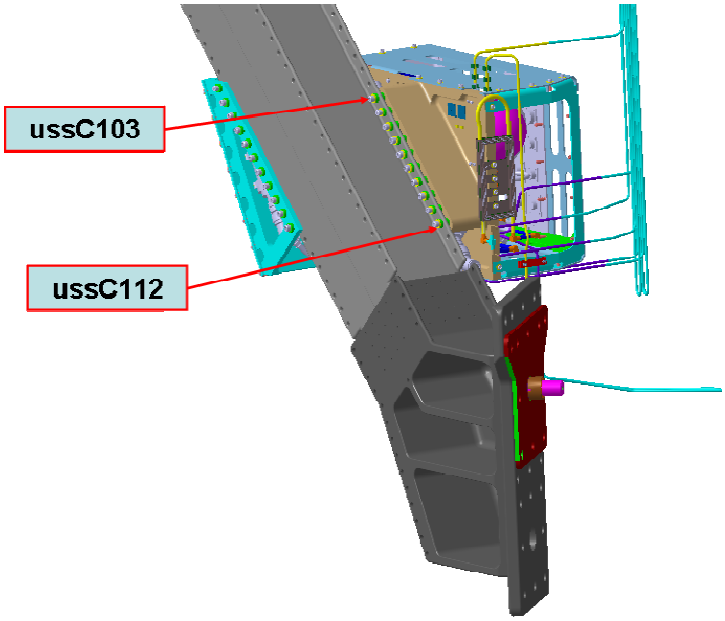

Figure 7: Secondary TTCB location on USS

2. Record and weight the **flight** hardware to be installed. Fill the table in Appendix A

OFF-LINE OPERATIONS

Note:

No lifting operations are required for the off line steps.

AMS-02 TASK SHEET (ATS) CONTINUATION PAGE	4. ATS NO.	TTCS-090908-01
	6. MOD NO.	R1

20. OPER SEQ. NO.	21. OPERATIONS (Print, Type, or Write Legibly)	VERIFICATION 22. TECH	VERIFICATION 23. QA/DV
3.	**Preliminary operations TTCB-P**		
	3.1 Check that the following hardware is available:		
	o TTCB-P with:		
	o Protection caps on electrical connectors		
	o Properly closed ends to avoid contamination		
	o Cleaned bolts, washers and nuts (Flight and temporary) as listed in this ATS		
	o Carton protection on start-up radiator		
	3.2 Check that the following operations have been performed on the TTCB-P:		
	o Pinch inlet tubes welded to the box		
	o MLI installed on pumps		
	o Removal of kapton tape		
	o Preparations for pinch tube bracket installation on the box		
	o Removal of green protection tape on baseplate and side-plate I/F's		
	3.3 Check that the following operations have been performed on the USS:		
	o Alodined area for grounding on I/F holes		
	o Protection foils (if any) removed		
	3.4 Check that the following tools are available:		
	o Special long torque tool to torque inner row of base plate bolts		
	o Pincers to keep washers in place		
	o Grease, Braycote 601EF (C1)		
	o Koroporon primer		

AMS-02 TASK SHEET (ATS) CONTINUATION PAGE	4. ATS NO.	TTCS-090908-01
	6. MOD NO.	R1

20. OPER SEQ. NO.	21. OPERATIONS (Print, Type, or Write Legibly)	VERIFICATION 22. TECH	23. QA/DV

4. INSTALLATION OF TTCB-P TO USS

4.1 Prepare the BASE PLATE for installation. Perform a visual inspection of the parts to be installed; clean the parts to be installed with Isopropyl Alcohol and let the parts to be installed dry on the clean towel

4.2 Prepare screws and washer to be used for the part installation. Perform a screws and washer visual inspection; clean screws and washers in an Isopropyl Alcohol bath and let screws and washers dry on a clean towel

4.3 Perform a visual inspection of the USS check the cleanliness of all the inserts to be used. If necessary clean them with Isopropyl Alcohol

4.4 Weight all the hardware to be installed, including fasteners. Record the weight in Appendix A.

4.5 WARNING: TTCB installation reference drawings are as indicated at the start of this ATS.
Verify before use the availability of the approved drawing revision

4.5.1 Only when indicated in drawing apply a thin layer of Koropron primer in between washers and base plate and or component.

Koropron primer - PN _____ Lot#_____ Exp. Date _____

4.5.2 Install the indicated components as shown in the figure below (repeat Figure 2)

TTCB Primary-Port/Wake

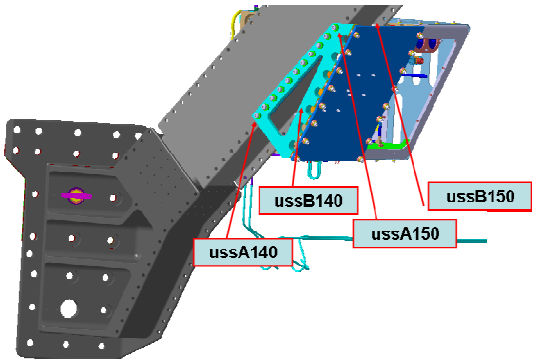

WARNINGS:

AT LEAST TWO PERSONS ARE REQUIRED TO HOLD THE TTCB-P IN PLACE AND TWO PEOPLE TO INSTALL THE BOLTS FOR THE FIRST HAND TIGHT FIXATION

4.5.3 Hand tighten the bolts

4.6 TTCB-P BASE PLATE TORQUING

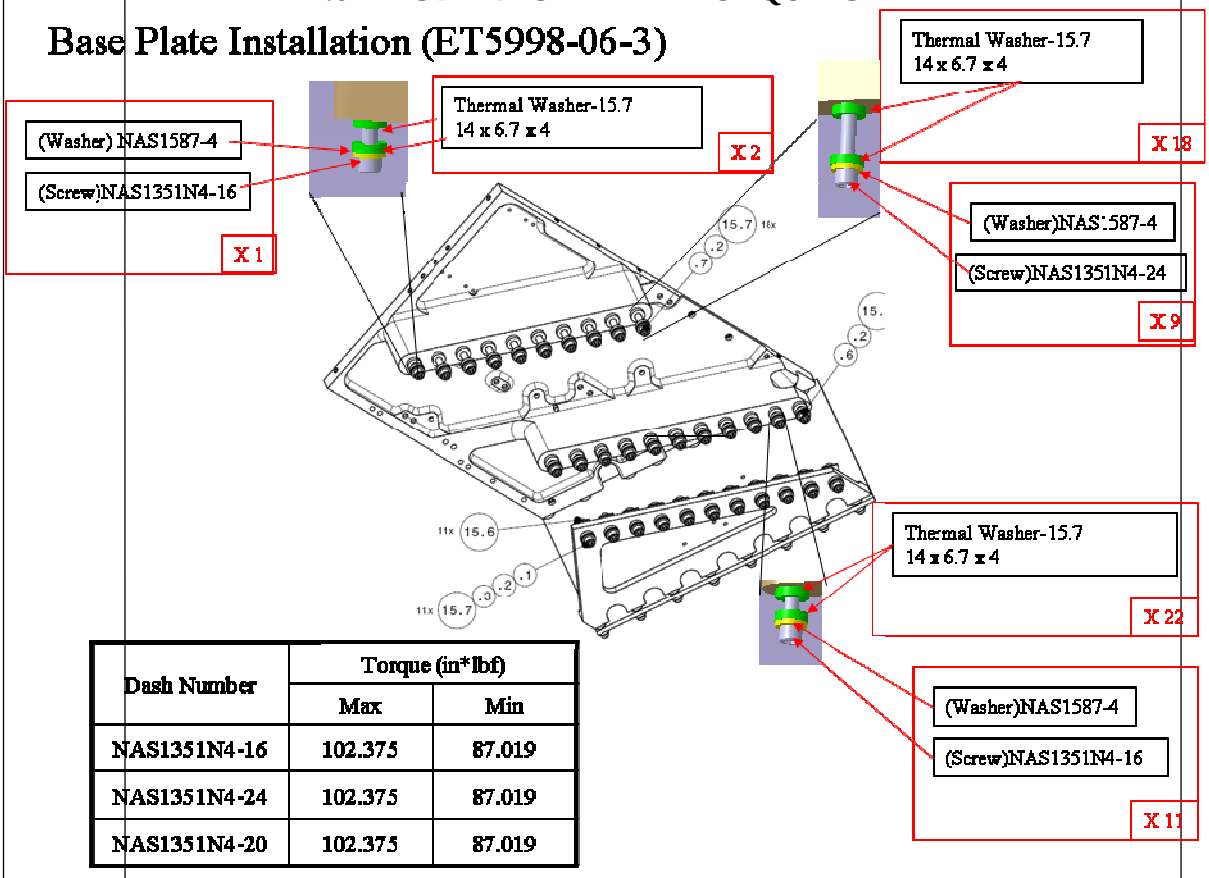

Dash Number	Torque (in*lbf)	
	Max	Min
NAS1351N4-16	102.375	87.019
NAS1351N4-24	102.375	87.019
NAS1351N4-20	102.375	87.019

Figure 8: Connection base plate to USS

4.6.1 Apply a thin layer of Grease, Braycote 601EF (C1), to the threads of each bolt prior the installation (as reported on the assembly drawings).

Braycote Grease - PN _____ Lot#_____ Exp. Date _____

AMS-02 TASK SHEET (ATS) CONTINUATION PAGE	4. ATS NO.	TTCS-090908-01
	6. MOD NO.	R1

20. OPER SEQ. NO.	21. OPERATIONS (Print, Type, or Write Legibly)	VERIFICATION 22. TECH	23. QA/DV

4.7 Install the fasteners as per figure 8 and record fasteners lot number (write by hand)
USE INSTALLATION BOLTS FOR BP_USS_2_1 TO BP_USS_2_9
These will be temporary until TRD GAS BOX installation.
USE FLIGHT BOLTS FOR ALL OTHER POSITIONS

Use TTCS numbering to be able to track TTCB installation running torques

Bolt/washer/nut and number NAS number LOT

_____ _____ LOT#_____

_____ _____ LOT#_____

_____ _____ LOT#_____

_____ _____ LOT#_____

_____ _____ LOT#_____

_____ _____ LOT#_____

_____ _____ LOT#_____

4.8 Torque the fasteners installed in the former step to the final torque value. Seating torque values are shown in below table.

Dash Number	Torque (in*lbf)	
	Max	Min
NAS1351N4-16	102.375	87.019
NAS1351N4-24	102.375	87.019
NAS1351N4-20	102.375	87.019

4.9 Check this value with the table at the end of this ATS.
Locking torque shall be in between **3.5-30 inch*lbf (size 0.250)**.

4.10 Check this value with Table 1 at the start of this ATS. Final torque shall be the seating torque ABOVE LOCKING TORQUE 5% precision on torque

AMS-02 TASK SHEET (ATS) CONTINUATION PAGE	4. ATS NO.	TTCS-090908-01
	6. MOD NO.	R1

20. OPER SEQ. NO.	21. OPERATIONS (Print, Type, or Write Legibly)	VERIFICATION 22. TECH	23. QA/DV

Base Plate Installation (ET5998-06-3)

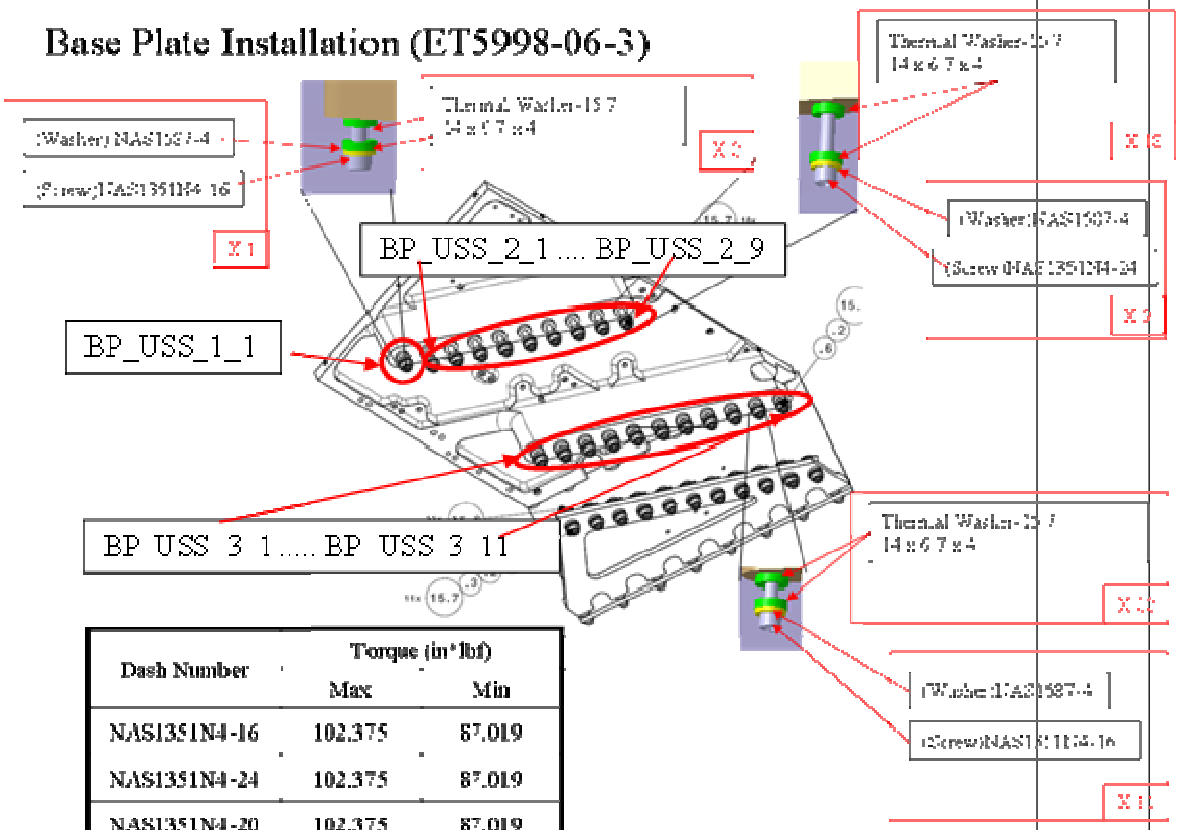

Dash Number	Torque (in*lbf) Max	Min
NAS1351N4-16	102.375	87.019
NAS1351N4-24	102.375	87.019
NAS1351N4-20	102.375	87.019

Torque Wrench- Locking Torque (locking is the same as running torque)

PN _____ M# _____ Cal Due Date_____

Torque Wrench- Final Torque

PN _____ M# _____ Cal Due Date_____

Bolt indication (see figure above)	**Locking Torque**	**Final Torque**
_____	_____	_____
_____	_____	_____
_____	_____	_____

AMS-02 TASK SHEET (ATS) CONTINUATION PAGE	4. ATS NO.	TTCS-090908-01
	6. MOD NO.	R1

20. OPER SEQ. NO.	21. OPERATIONS (Print, Type, or Write Legibly)	VERIFICATION 22. TECH	VERIFICATION 23. QA/DV
	Bolt indication (see figure above) Locking Torque Final Torque		
4.11	End of online operation base plate to USS		

AMS-02 TASK SHEET (ATS) CONTINUATION PAGE	4. ATS NO.	TTCS-090908-01
	6. MOD NO.	R1

20. OPER SEQ. NO.	21. OPERATIONS (Print, Type, or Write Legibly)	VERIFICATION 22. TECH	23. QA/DV

4.12 SIDE PLATE TORQUING TO USS

4.13 Prepare the SIDE PLATE for installation. Perform a visual inspection of the parts to be installed; clean the parts to be installed with Isopropyl Alcohol and let the parts to be installed dry on the clean towel

4.14 Prepare screws and washer to be used for the part installation. Perform a screws and washer visual inspection; clean screws and washers in an Isopropyl Alcohol bath and let screws and washers dry on a clean towel

4.15 Perform a visual inspection of the USS check the cleanliness of all the inserts to be used. If necessary clean them with Isopropyl Alcohol

4.16 Weight all the hardware to be installed, including fasteners. Record the weight in Appendix A.

ITEM	WEIGHT

SCALE

4.17 PN _____ M# _____ Cal Date_____

AMS-02 TASK SHEET (ATS) CONTINUATION PAGE	4. ATS NO.	TTCS-090908-01
	6. MOD NO.	R1

20. OPER SEQ. NO.	21. OPERATIONS (Print, Type, or Write Legibly)	VERIFICATION 22. TECH	23. QA/DV
4.18	WARNING: TTCB installation reference drawings are as indicated at the start of this ATS. Verify before use the availability of the approved drawing revision		
4.18.1	Check the bill of material in the assembly drawing.		
4.18.2	Only when indicated in drawing apply a thin layer of Koropron primer in between washers and base plate and or component. Koropron primer - PN _____ Lot#_____ Exp. Date _____		
4.18.3	Install the indicated components as shown in the figure below.		

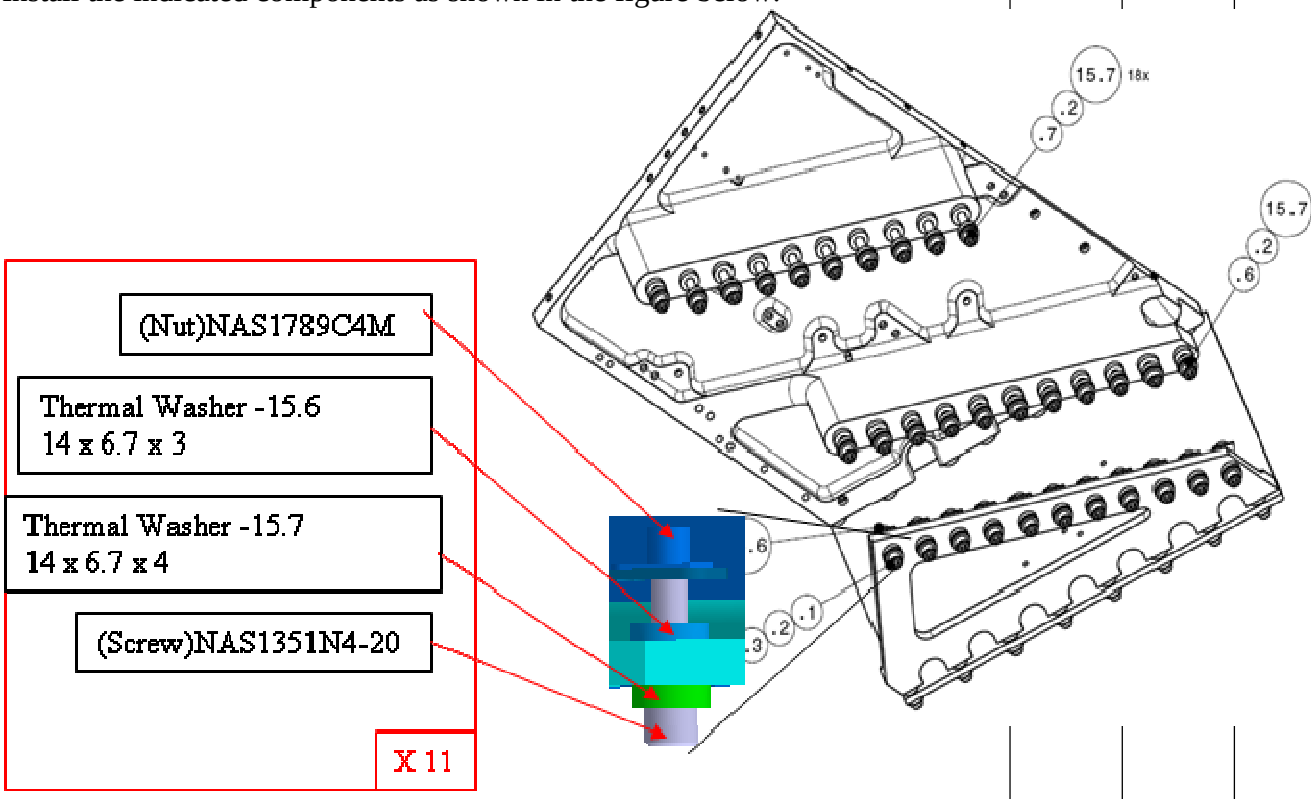

Figure 4: Connection side plate to USS

4.18.4	Apply a thin layer of Grease, Braycote 601EF (C1), to the threads of each bolt prior the installation (as reported on the assembly drawings). Braycote Grease - PN _____ Lot#_____ Exp. Date _____		

AMS-02 TASK SHEET (ATS) CONTINUATION PAGE	4. ATS NO.	TTCS-090908-01
	6. MOD NO.	R1

20. OPER SEQ. NO.	21. OPERATIONS (Print, Type, or Write Legibly)	VERIFICATION 22. TECH	23. QA/DV

4.19 Install the fasteners as per figure 4 and record fasteners lot number (write by hand)
USE FLIGHT BOLTS

Bolt/washer/nut and number	NAS number	LOT
_____	_____	LOT#_____
_____	_____	LOT#_____
_____	_____	LOT#_____
_____	_____	LOT#_____
_____	_____	LOT#_____
_____	_____	LOT#_____
_____	_____	LOT#_____
_____	_____	LOT#_____
_____	_____	LOT#_____

4.20 Torque the fasteners installed in the former step to the final torque value. Seating torque values are shown in below table.

Dash Number	Torque (in*lbf)	
	Max	Min
NAS1351N4-20	102.375	87.019

4.21 Check this value with the table at the end of this ATS.

Locking torque shall be in between **3.5-30 inch*lbf (size 0.250)**.

4.22 Check this value with Table 1 at the start of this ATS.
Final torque shall be the seating torque ABOVE LOCKING TORQUE.

AMS-02 TASK SHEET (ATS) CONTINUATION PAGE	4. ATS NO.	TTCS-090908-01
	6. MOD NO.	R1

20. OPER SEQ. NO.	21. OPERATIONS (Print, Type, or Write Legibly)	VERIFICATION 22. TECH	23. QA/DV

5% precision on torque.

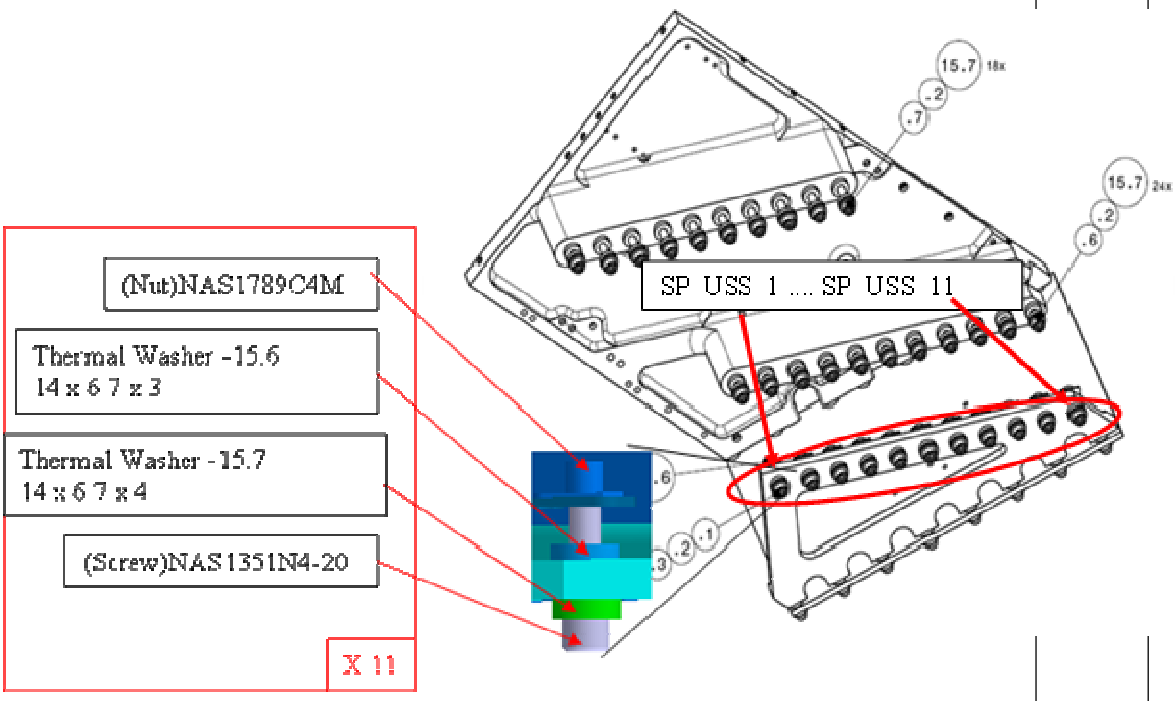

Torque Wrench- Locking Torque (locking is the same as running torque)

PN _____ M# _____ Cal Due Date_____

Torque Wrench- Final Torque

PN _____ M# _____ Cal Due Date_____

Bolt indication (see figure above)	**Locking Torque**	**Final Torque**
_____	_____	_____
_____	_____	_____
_____	_____	_____
_____	_____	_____
_____	_____	_____

AMS-02 TASK SHEET (ATS) CONTINUATION PAGE	4. ATS NO.	TTCS-090908-01
	6. MOD NO.	R1

20. OPER SEQ. NO.	21. OPERATIONS (Print, Type, or Write Legibly)	VERIFICATION 22. TECH	23. QA/DV
	Bolt indication (see figure above) Locking Torque Final Torque		
	_____ _____ _____		
	_____ _____ _____		
	_____ _____ _____		
	_____ _____ _____		
	_____ _____ _____		
	_____ _____ _____		
	_____ _____ _____		
	_____ _____ _____		
	_____ _____ _____		
	_____ _____ _____		
	_____ _____ _____		
4.23	End of online operation TTCB-P side plate to USS		
4.24	CHECK ACCES FOR PINCHING AND FILLING		
4.25	PERFORM TUBE CUTTING (PIPE CUTTER) AND DEBURRING PER AMSTR-NLR-PR-008 TTCB and condenser tube cutting procedure		
4.26	PERFORM TTCB-P WELDING ACCORDING TO AMSTR-NLR-PR-067		
4.27	PERFORM TTCB-P GROUNDING CHECK ACCORDING TO AMSTR-NLR-PR-072		

OFF-LINE OPERATIONS TTCB-S

Note:

No lifting operations are required for the off line steps.

AMS-02 TASK SHEET (ATS) CONTINUATION PAGE	4. ATS NO.	TTCS-090908-01
	6. MOD NO.	R1

20. OPER SEQ. NO.	21. OPERATIONS (Print, Type, or Write Legibly)	VERIFICATION 22. TECH	VERIFICATION 23. QA/DV
5.	**Preliminary operations TTCB-S**		
	5.1 Check that the following hardware is available:		
	o TTCB-S with:		
	o Protection caps on electrical connectors		
	o Properly closed ends to avoid contamination		
	o Cleaned bolts, washers and nuts (Flight and temporary) as listed in this ATS		
	o Carton protection on start-up radiator		
	5.2 Check that the following operations have been performed on the TTCB-P:		
	o Pinch inlet tubes welded to the box		
	o MLI installed on pumps		
	o Removal of kapton tape		
	o Preparations for pinch tube bracket installation on the box		
	o Removal of green protection tape on baseplate and side-plate I/F's		
	5.3 Check that the following operations have been performed on the USS:		
	o Alodined area for grounding on I/F holes		
	o Protection foils (if any) removed		
	5.4 Check that the following tools are available:		
	o Special long torque tool to torque inner row of base plate bolts		
	o Pincers to keep washers in place		
	o Grease, Braycote 601EF (C1)		
	o Koroporon primer		
5.5	End of online operation TTCB-P side plate to USS		

AMS-02 TASK SHEET (ATS) CONTINUATION PAGE	4. ATS NO.	TTCS-090908-01
	6. MOD NO.	R1

20. OPER SEQ. NO.	21. OPERATIONS (Print, Type, or Write Legibly)	VERIFICATION 22. TECH	VERIFICATION 23. QA/DV
6.	**INSTALLATION OF TTCB-S TO USS**		
6.1	Prepare the BASE PLATE for installation. Perform a visual inspection of the parts to be installed; clean the parts to be installed with Isopropyl Alcohol and let the parts to be installed dry on the clean towel		
6.2	Prepare screws and washer to be used for the part installation. Perform a screws and washer visual inspection; clean screws and washers in an Isopropyl Alcohol bath and let screws and washers dry on a clean towel		
6.3	Perform a visual inspection of the USS check the cleanliness of all the inserts to be used. If necessary clean them with Isopropyl Alcohol		
6.4	Weight all the hardware to be installed, including fasteners. Record the weight in Appendix A.		
6.5	WARNING: TTCB installation reference drawings are as indicated at the start of this ATS. Verify before use the availability of the approved drawing revision		
6.5.1	Only when indicated in drawing apply a thin layer of Koropron primer in between washers and base plate and or component. Koropron primer - PN _____ Lot#_____ Exp. Date _____		
6.5.2	Install the indicated components as shown in the figure below (repeat Figure 5)		

TTCB Secondary-Starboard/Wake

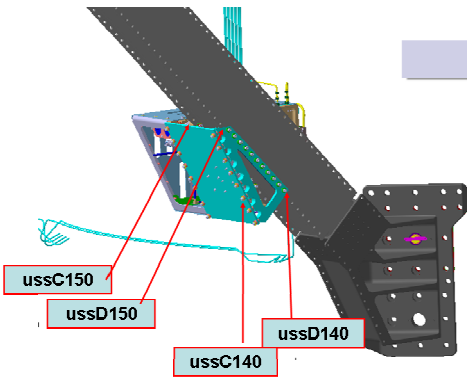

AMS-02 TASK SHEET (ATS) CONTINUATION PAGE	4. ATS NO.	TTCS-090908-01
	6. MOD NO.	R1

20. OPER SEQ. NO.	21. OPERATIONS (Print, Type, or Write Legibly)	VERIFICATION 22. TECH	23. QA/DV

WARNINGS:

AT LEAST TWO PERSONS ARE REQUIRED TO HOLD THE TTCB-P IN PLACE AND TWO PEOPLE TO INSTALL THE BOLTS FOR THE FIRST HAND TIGHT FIXATION

6.5.3 Hand tighten the bolts

6.6 TTCB-S BASE PLATE TORQUING

6.6.1 Install the indicated components as shown in the figure below.

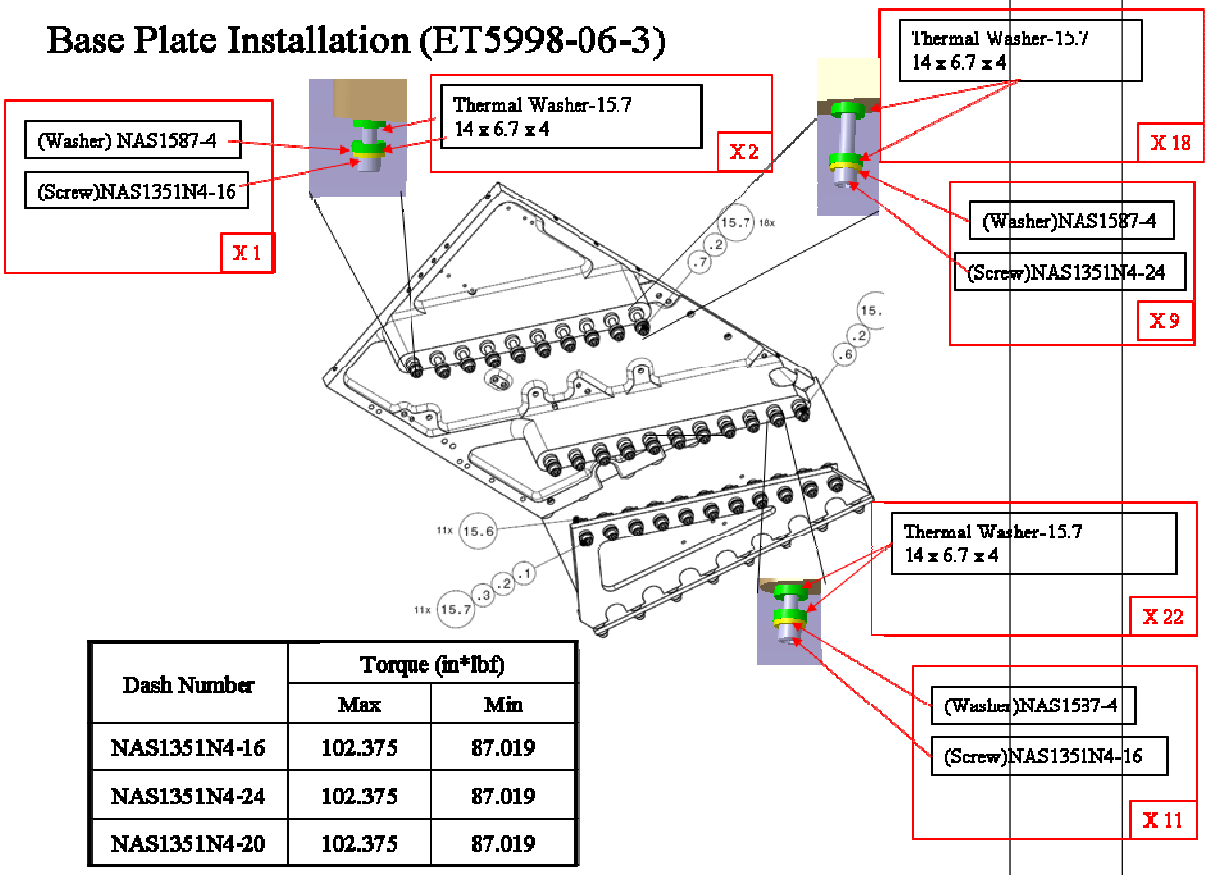

Dash Number	Torque (in*lbf)	
	Max	Min
NAS1351N4-16	102.375	87.019
NAS1351N4-24	102.375	87.019
NAS1351N4-20	102.375	87.019

Figure 9: Connection base plate to USS

6.6.2 Apply a thin layer of Grease, Braycote 601EF (C1), to the threads of each bolt prior the installation (as reported on the assembly drawings).

Braycote Grease - PN _____ Lot#_____ Exp. Date _____

AMS-02 TASK SHEET (ATS) CONTINUATION PAGE	4. ATS NO.	TTCS-090908-01
	6. MOD NO.	R1

20. OPER SEQ. NO.	21. OPERATIONS (Print, Type, or Write Legibly)	VERIFICATION 22. TECH	VERIFICATION 23. QA/DV
6.7	Install the fasteners as per figure 9 and record fasteners lot number (write by hand) USE FLIGHT BOLTS Use TTCS numbering to be able to track TTCB installation running torqes Bolt/washer/nut and number NAS number LOT _____ _____ LOT#_____ _____ _____ LOT#_____ _____ _____ LOT#_____ _____ _____ LOT#_____ _____ _____ LOT#_____ _____ _____ LOT#_____ _____ _____ LOT#_____ _____ _____ LOT#_____ _____ _____ LOT#_____		
6.8	Torque the fasteners installed in the former step to the final torque value. Seating torque values are shown in below table.		

Dash Number	Torque (in*lbf)	
	Max	Min
NAS1351N4-16	102.375	87.019
NAS1351N4-24	102.375	87.019
NAS1351N4-20	102.375	87.019

6.9	Check this value with the table at the end of this ATS. Locking torque shall be in between **3.5-30 inch*lbf (size 0.250)**.		
6.10	Check this value with Table 1 at the start of this ATS. Final torque shall be the seating torque ABOVE LOCKING TORQUE 5% precision on torque.		

AMS-02 TASK SHEET (ATS) CONTINUATION PAGE	4. ATS NO.	TTCS-090908-01
	6. MOD NO.	R1

20. OPER SEQ. NO.	21. OPERATIONS (Print, Type, or Write Legibly)	VERIFICATION 22. TECH	23. QA/DV

Base Plate Installation (ET5998-06-3)

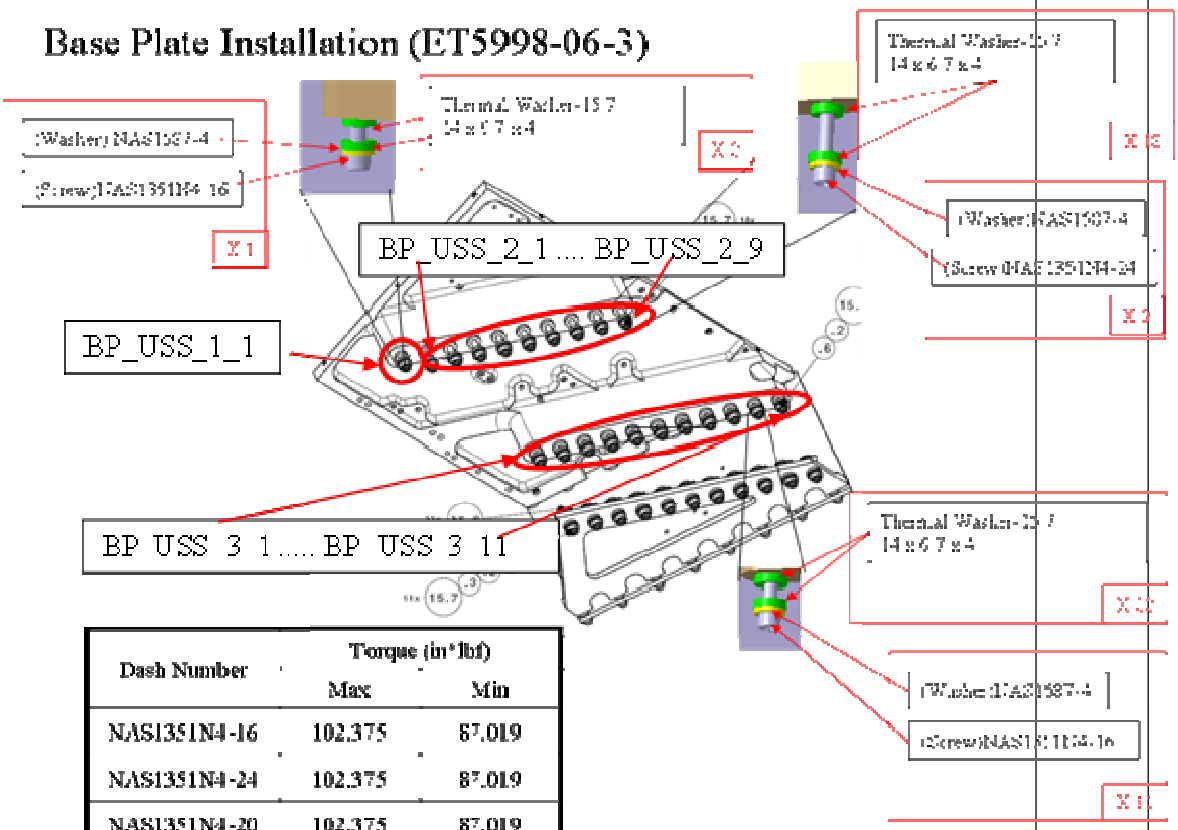

Dash Number	Torque (in*lbf) Max	Min
NAS1351N4-16	102.375	87.019
NAS1351N4-24	102.375	87.019
NAS1351N4-20	102.375	87.019

Torque Wrench- Locking Torque (locking is the same as running torque)

PN _____ M# _____ Cal Due Date_____

Torque Wrench- Final Torque

PN _____ M# _____ Cal Due Date_____

Bolt indication (see figure above)	**Locking Torque**	**Final Torque**
_____	_____	_____
_____	_____	_____
_____	_____	_____

AMS-02 TASK SHEET (ATS) CONTINUATION PAGE	4. ATS NO.	TTCS-090908-01
	6. MOD NO.	R1

20. OPER SEQ. NO.	21. OPERATIONS (Print, Type, or Write Legibly)	VERIFICATION 22. TECH	VERIFICATION 23. QA/DV
	Bolt indication (see figure above) Locking Torque Final Torque		
6.11	End of online operation TTCB-S base plate to USS		

AMS-02 TASK SHEET (ATS) CONTINUATION PAGE	4. ATS NO.	TTCS-090908-01
	6. MOD NO.	R1

20. OPER SEQ. NO.	21. OPERATIONS (Print, Type, or Write Legibly)	VERIFICATION 22. TECH	23. QA/DV

7. SIDE PLATE TORQUING TO USS

7.1 Prepare the SIDE PLATE for installation. Perform a visual inspection of the parts to be installed; clean the parts to be installed with Isopropyl Alcohol and let the parts to be installed dry on the clean towel

7.2 Prepare screws and washer to be used for the part installation. Perform a screws and washer visual inspection; clean screws and washers in an Isopropyl Alcohol bath and let screws and washers dry on a clean towel

7.3 Perform a visual inspection of the USS check the cleanliness of all the inserts to be used. If necessary clean them with Isopropyl Alcohol

7.4 Weight all the hardware to be installed, including fasteners. Record the weight in Appendix A.

ITEM	WEIGHT

SCALE

7.5 PN _____ M# _____ Cal Date_____

AMS-02 TASK SHEET (ATS) CONTINUATION PAGE	4. ATS NO.	TTCS-090908-01
	6. MOD NO.	R1

20. OPER SEQ. NO.	21. OPERATIONS (Print, Type, or Write Legibly)	VERIFICATION 22. TECH	23. QA/DV
7.6	WARNING: TTCB installation reference drawings are as indicated at the start of this ATS. Verify before use the availability of the approved drawing revision		
7.6.1	Check the bill of material in the assembly drawing.		
7.6.2	Only when indicated in drawing apply a thin layer of Koropron primer in between washers and base plate and or component. Koropron primer - PN _____ Lot#_____ Exp. Date _____		
7.6.3	Install the indicated components as shown in the figure below.		

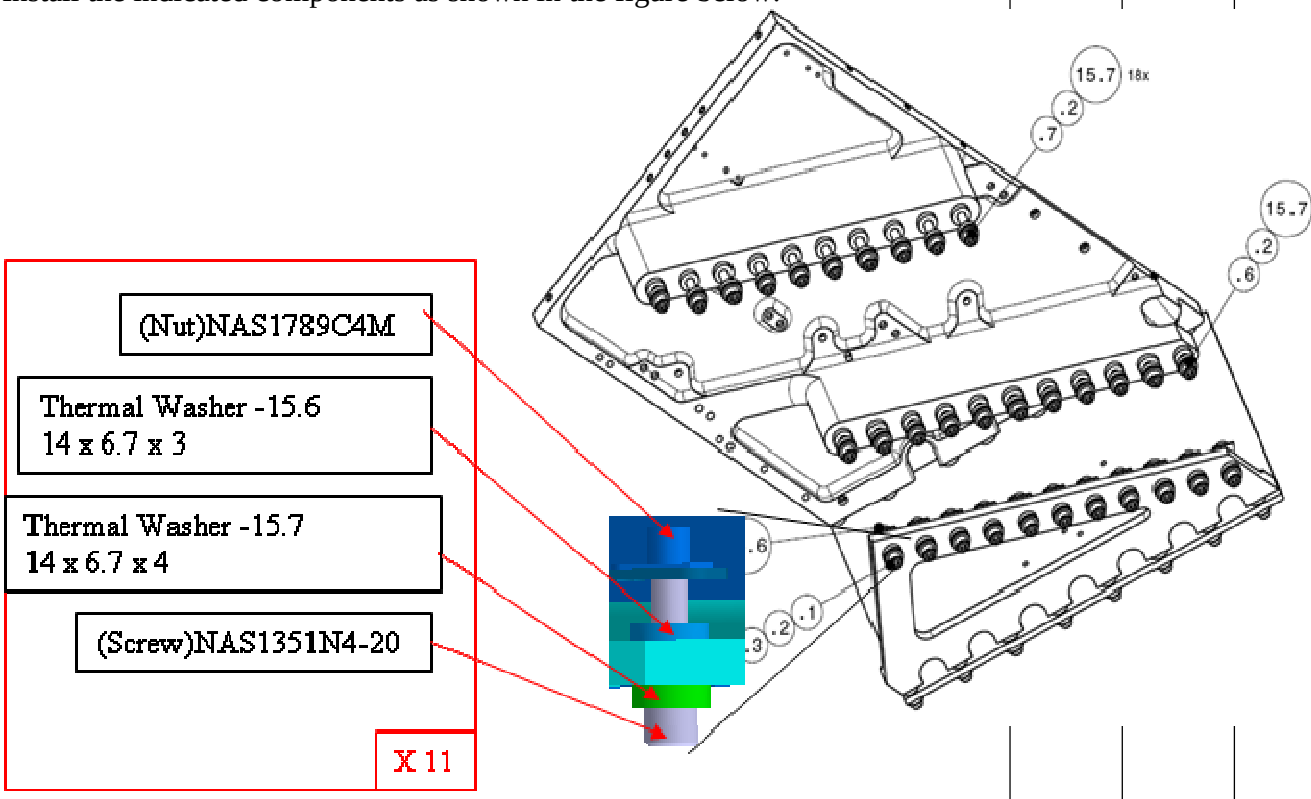

Figure 4: Connection side plate to USS

7.6.4	Apply a thin layer of Grease, Braycote 601EF (C1), to the threads of each bolt prior the installation (as reported on the assembly drawings). Braycote Grease - PN _____ Lot#_____ Exp. Date _____		

AMS-02 TASK SHEET (ATS) CONTINUATION PAGE	4. ATS NO.	TTCS-090908-01
	6. MOD NO.	R1

20. OPER SEQ. NO.	21. OPERATIONS (Print, Type, or Write Legibly)	VERIFICATION 22. TECH	23. QA/DV

7.7 Install the fasteners as per figure 4 and record fasteners lot number (write by hand)
USE FLIGHT BOLTS

Bolt/washer/nut and number	NAS number	LOT
_____	_____	LOT#_____
_____	_____	LOT#_____
_____	_____	LOT#_____
_____	_____	LOT#_____
_____	_____	LOT#_____
_____	_____	LOT#_____
_____	_____	LOT#_____
_____	_____	LOT#_____
_____	_____	LOT#_____

7.8 Torque the fasteners installed in the former step to the final torque value. Seating torque values are shown in below table.

Dash Number	Torque (in*lbf)	
	Max	Min
NAS1351N4-20	102.375	87.019

7.9 Check this value with the table at the end of this ATS.

Locking torque shall be in between **3.5-30 inch*lbf (size 0.250)**.

7.10 Check this value with Table 1 at the start of this ATS.
Final torque shall be the seating torque ABOVE LOCKING TORQUE, 5% precision on torque.

AMS-02 TASK SHEET (ATS) CONTINUATION PAGE	4. ATS NO.	TTCS-090908-01
	6. MOD NO.	R1

20. OPER SEQ. NO.	21. OPERATIONS (Print, Type, or Write Legibly)	VERIFICATION 22. TECH	23. QA/DV

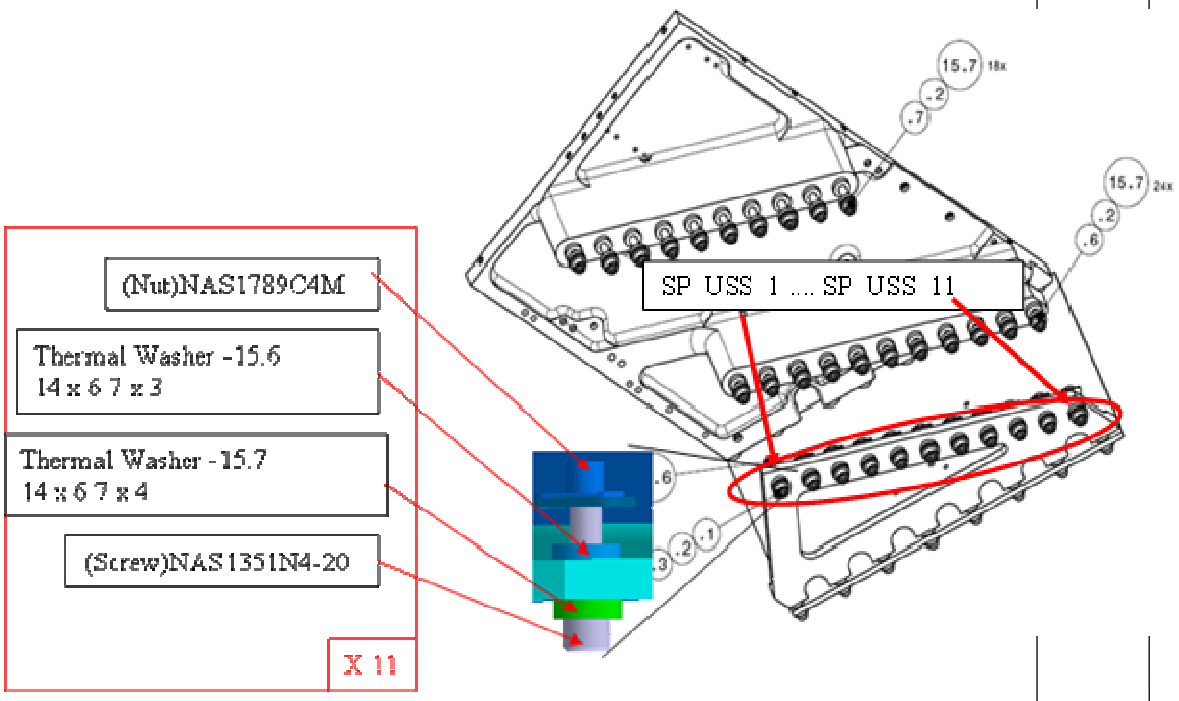

Torque Wrench- Locking Torque (locking is the same as running torque)

PN _____ M# _____ Cal Due Date_____

Torque Wrench- Final Torque

PN _____ M# _____ Cal Due Date_____

Bolt indication (see figure above)	**Locking Torque**	**Final Torque**
_____	_____	_____
_____	_____	_____
_____	_____	_____
_____	_____	_____
_____	_____	_____

AMS-02 TASK SHEET (ATS) CONTINUATION PAGE	4. ATS NO.	TTCS-090908-01
	6. MOD NO.	R1

20. OPER SEQ. NO.	21. OPERATIONS (Print, Type, or Write Legibly)	VERIFICATION 22. TECH	VERIFICATION 23. QA/DV
	Bolt indication (see figure above) Locking Torque Final Torque		
	_____ _____ _____		
	_____ _____ _____		
	_____ _____ _____		
	_____ _____ _____		
	_____ _____ _____		
	_____ _____ _____		
	_____ _____ _____		
	_____ _____ _____		
	_____ _____ _____		
	_____ _____ _____		
	_____ _____ _____		
7.11	End of online operation side plate to USS		
7.12	CHECK ACCES FOR PINCHING AND FILLING		
7.13	PERFORM TUBE CUTTING (PIPE CUTTER) AND DEBURRING PER AMSTR-NLR-PR-008 TTCB and condenser tube cutting procedure		
7.14	PERFORM TTCB-S WELDING ACCORDING TO AMSTR-NLR-PR-067		
7.15	PERFORM HYDRAULIC CONNECTOR FIT CHECK		
7.16	PERFORM TTCB-S GROUNDING CHECK ACCORDING TO AMSTR-NLR-PR-072		
7.17	CLOSE THIS ATS		

AMS-02 TASK SHEET (ATS) CONTINUATION PAGE	4. ATS NO.	TTCS-090908-01
	6. MOD NO.	R1

20. OPER SEQ. NO.	21. OPERATIONS (Print, Type, or Write Legibly)	VERIFICATION 22. TECH	VERIFICATION 23. QA/DV
8.	**APPENDIX A. Record the weight of all the TTCB-P flight hardware to be installed, including fasteners.**		

ITEM	WEIGHT

AMS-02 TASK SHEET (ATS) CONTINUATION PAGE	4. ATS NO.	TTCS-090908-01
	6. MOD NO.	R1

20. OPER SEQ. NO.	21. OPERATIONS (Print, Type, or Write Legibly)	VERIFICATION 22. TECH	VERIFICATION 23. QA/DV

SCALE

PN _____ M# _____ Cal Date_____

AMS-02 TASK SHEET (ATS) CONTINUATION PAGE	4. ATS NO.	TTCS-090908-01
	6. MOD NO.	R1

20. OPER SEQ. NO.	21. OPERATIONS (Print, Type, or Write Legibly)	VERIFICATION 22. TECH	VERIFICATION 23. QA/DV
9.	**APPENDIX B. Record the weight of all the TTCB-P flight hardware to be installed, including fasteners.**		

ITEM	WEIGHT

AMS-02 TASK SHEET (ATS)

CONTINUATION PAGE

4. ATS NO.	TTCS-090908-01
6. MOD NO.	R1

20. OPER SEQ. NO.	21. OPERATIONS (Print, Type, or Write Legibly)	VERIFICATION 22. TECH	VERIFICATION 23. QA/DV

SCALE

PN _____ M# _____ Cal Date_____

AMS-02 TASK SHEET (ATS) CONTINUATION PAGE	4. ATS NO.	TTCS-090908-01
	6. MOD NO.	R1

20. OPER SEQ. NO.	21. OPERATIONS (Print, Type, or Write Legibly)	VERIFICATION 22. TECH	23. QA/DV

10. **Appendix C: Seating Torque values**

Max and Min torque summary of TTCS Parts issue 20090109

Joints	Bolt Dash Number	Bolt Number	Insert/Nut Dash Number	Insert/Nut Number	Washer Dash Number	Washer Number	Torque(in*lbf) Max	Torque(in*lbf) Min
TRD_Brackets_TTCB_Shared	NAS1351N4-24	9	MS21209 F4-15	9	NAS1587-4	9	102.375	87.019
Base plate &USS	NAS1351N4-16	12	MS21209F4-15	12	NAS1587-4	12	102.375	87.019
Side plate &USS	NAS1351N4-20	11	NAS1789C4M	11	no	11	102.375	87.019
Start up radiator &base/sideplate	NAS1351N3-16	16	MS21209F1-25	16	NAS1149EO363R	16	42.237	35.901
cover &base	NAS1352N08-8	10	MS21209C0820	10	NAS1149EN832R	10	24.944	21.203
	NAS1352N06-6	2	NAS1330-06-106	2	no	0	13.861	11.782
Accumulator bracket &base plate	NAS1351N3-16	8	MS21209F1-15	8	NAS1149EO363R	8	42.237	35.901
Pump Bracket &start up radiator	NAS1352N06-10	8	NAS1291C06M	8	NAS1149EN532R	8	13.861	11.782
Aps/Dps &Base plate	NAS1352N08-14	8	MS21209C0820	8	NAS1149EN832R	8	24.944	21.203
HX& Base plate	NAS1351N3-16	8	MS21209 F1-15	8	NAS 620 10 LC	8	42.237	35.901
Cold orbit heater &base plate	NAS1352N08-10	4	MS21209C0820	4	NAS1149EN832R	4	24.944	21.203
Controller &base plate	NAS1351N3-10	6	MS124695 10-32X1.5dia	6	no	0	42.237	35.901
Cover&CoverRibs	NAS1352N06-6	25	NAS1330-06-106	25	NAS1149EN532R	25	13.861	11.782
Cover Rib&Baseplate	NAS1352N06-12	2	NAS1330-06-106	2	no	0	13.861	11.782
Preheater&Baseplate	NAS1352N04-LB-6	8	no	0	no	0	7.459	6.34
ConnectorsPlate&Cover	NAS1352N06-6	10	NAS1330-06-106	10	NAS1149EN532R	10	13.861	11.782
PressSensors&Cover	NAS1352N06-8	8	MS21209C0620	8	no	0	13.861	11.782
PipeClamp&BasePlate	NAS1352N08-8	4	MS21209C0820	4	no	0	24.944	21.203
PipeClamp&PipeClamp	NAS1352N06-6	8	MS21209C0610	8	no	0	13.861	11.782
ClampBracker&Collar	NAS1351N08-LB14	7	no	0	NAS1149EN832R	7	26.863	22.834
Pipe-Fix&Clamp	NAS1351N06-10	8	MS21209F0625	8	NAS1149EN532R	8	15.662	13.312
Press&Saddle	NAS1351N08-12	8	MS21209F0820	8	NAS1149EN832R	8	26.863	22.834
Pipe clamp and cover	NAS1352N06-12	2	NAS1330-06-106	2	no	0	13.861	11.782