Doc. #	**TTCS-SYSU-TEST-TPR-017-1.0**		
Project	**AMS-TTCS**		
Title	**TTCS-SYSU-TEST-TPR-017-1.0 TTCB LIMITED FUCTIONAL CHECK PROCEDURE**		
Create Date	2009/4/7 17:32	**Save date**	2009/4/25 21:45
File name	TTCS-SYSU-TEST-TPR-017-1.0 .docx	**Issue**	1.0
Distribution		**Pages**	23

	Name	**Signature**	**Date**	**Department/Organization**
Prepared by	Zhang Zhan			
Checked by				
Approved by				

Distribution List

Internal		**External**	
Name	**Department**	**Name**	**Organization**

No part of this document may be reproduced and/or disclosed, in any form or by any means, without the prior written permission of SUN YAT-SEN UNIVERSITY.

CHANGE RECORD			
ISSUE	*DATE*	*AUTHOR*	*REASON FOR CHANGE AND AFFECTED SECTIONS*
1.0			*Create this document.*

No part of this document may be reproduced and/or disclosed, in any form or by any means, without the prior written permission of SUN YAT-SEN UNIVERSITY.

TABLE OF CONTENT

1. SCOPE 4

2. THE LOCATION OF THE T-SENSORS/HEATER 4

3. TTCB LIMITED FUNCTIONAL TEST STEPS 6

4. TTCB LIMITED FUNCTIONAL TEST SET-UP 6

4.1 TTCB limited functional test set-up for DPS 6

4.2 TTCB limited functional test set-up for APS 8

5. TTCB LIMITED FUNCTIONAL CHECK PROCEDURE 11

5.1 Check procedure for PT1000s, Dallas, Heaters and Peltries 11

5.2 Limited functional check procedure for APS in TTCB 20

5.3 Limited functional check procedure for DPS in TTCB 22

LIST OF FIGURES

Figure 2-1 Assembly of the TTCB FM 5

Figure 4-1 TTCB limited functional test set-up 2D drawing for DPS 7

Figure 4-2 TTCB limited functional test set-up 3D drawing for DPS 7

Figure 4-3 TTCB limited functional test set-up 2D drawing for APS 9

Figure 4-4 TTCB limited functional test set-up 3D drawing for APS 9

No part of this document may be reproduced and/or disclosed, in any form or by any means, without the prior written permission of SUN YAT-SEN UNIVERSITY.

1. SCOPE

This document describes a limited TTCB functional check in INFN SERMS. All the sensors, heaters and Peltier elements needed to be checked, including temperature sensors and pressure sensors in the TTCB FM.

2. THE LOCATION OF THE T-SENSORS/HEATER

The followed picture described the lasted version about assembly of the TTCB FM, all temperature sensor, heaters, Peltier elements, pressure sensor and used in the TTCE software are lined out completely so that someone can figure out their location easy and check it based on the following procedure.

No part of this document may be reproduced and/or disclosed, in any form or by any means, without the prior written permission of SUN YAT-SEN UNIVERSITY.

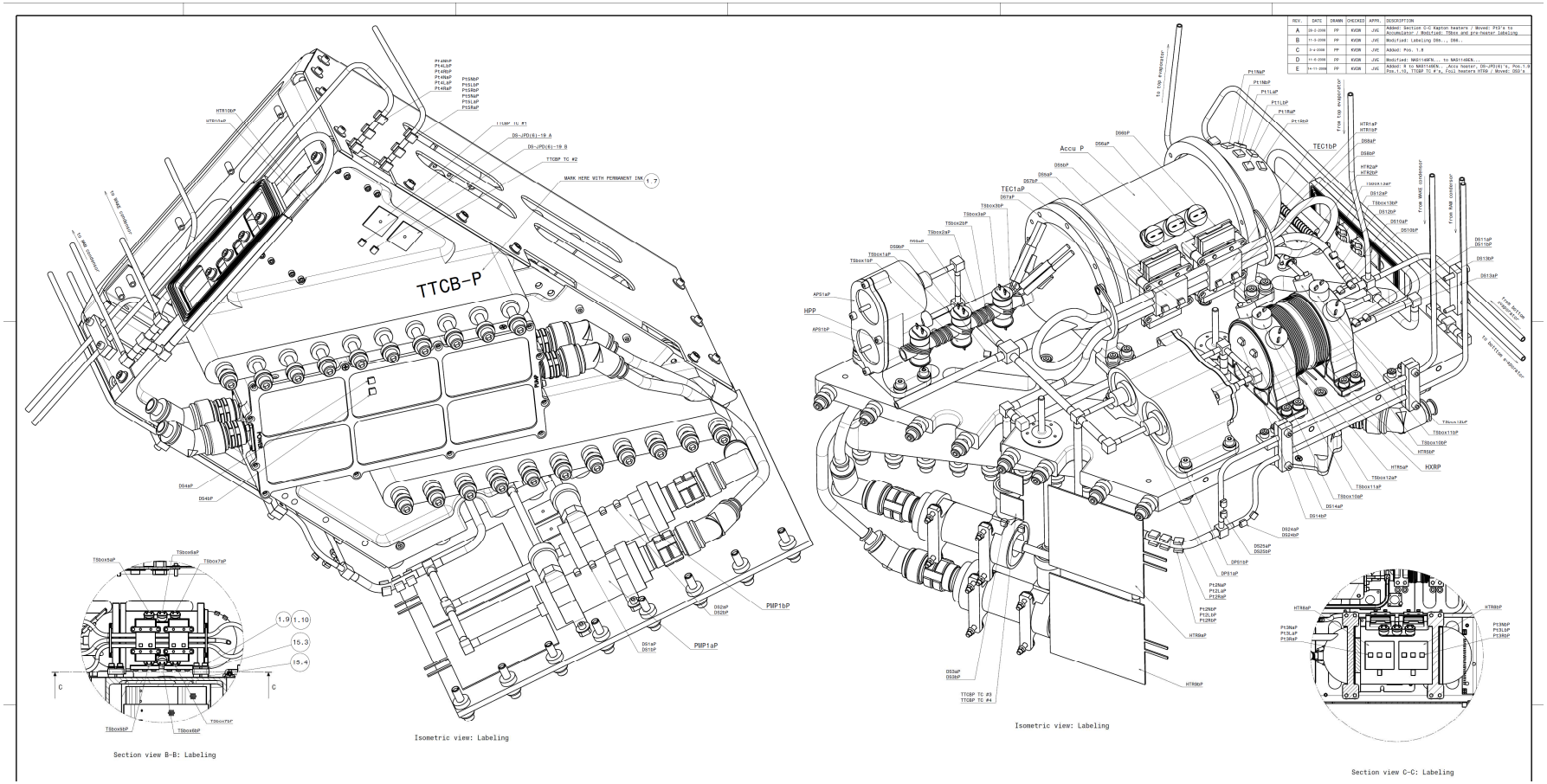

Figure 2-1 Assembly of the TTCB FM

No part of this document may be reproduced and/or disclosed, in any form or by any means, without the prior written permission of SUN YAT-SEN UNIVERSITY.

3. TTCB LIMITED FUNCTIONAL TEST STEPS

Before TTCB functional check test in vacuum chamber, the limited test check have to be carried in order to verify all the heaters and sensors in the TTCB could performance normally. The main limited functional checks for TTCB have been listed as following:

1) Connect TTCB to TTCE correctly
2) Read out all the temperature sensors values at room temperature and record them.
3) Switch on /off all the heaters one by one to verify the function by current change
4) Vacuum the TTCB down to different vacuum level to verify the DPS readings
5) Fill the N2 into TTCB and inspect the pressure value by APS

NOTE: All the sensors in TTCE need to be verified, including TTCE A side and TTCE B side.

4. TTCB LIMITED FUNCTIONAL TEST SET-UP

4.1 TTCB limited functional test set-up for DPS

Before check the DPS function in the TTCB, we have to seal all the tubes by 4mm cap. Then a vacuum dry pump would be connected to the TTCB with a filter between them. Depressurize the TTCB and inspect the DPS reading at three different pressure levels. Figure 4-1 and Figure 4-2 are the set-up schematic for DPS limited functional check.

No part of this document may be reproduced and/or disclosed, in any form or by any means, without the prior written permission of SUN YAT-SEN UNIVERSITY.

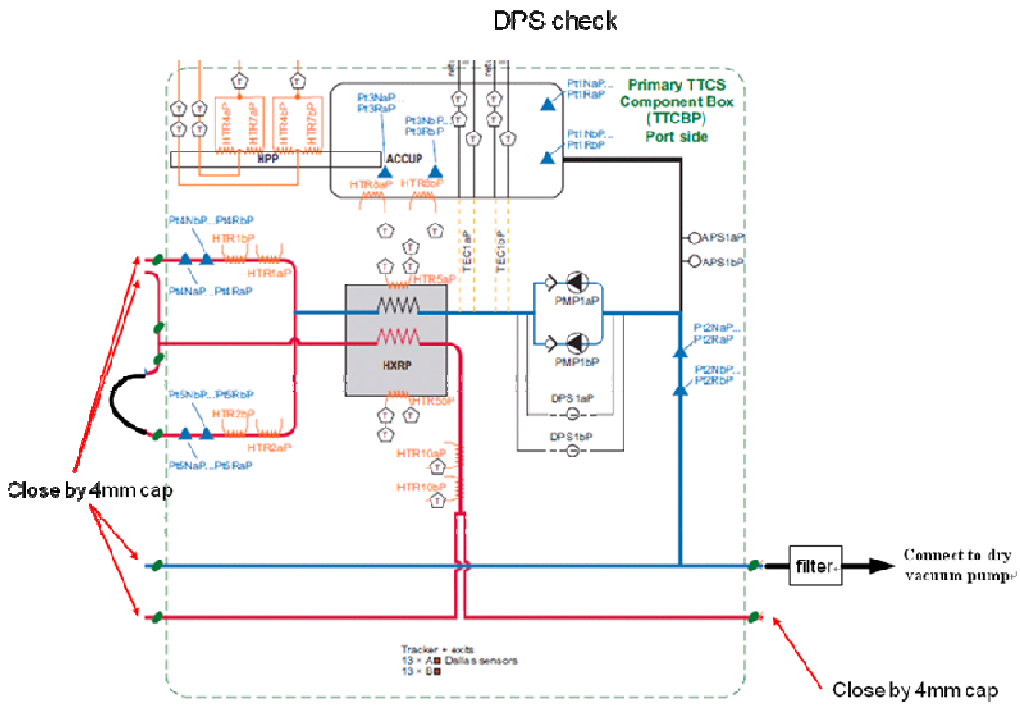

Figure 4-1 TTCB limited functional test set-up 2D drawing for DPS

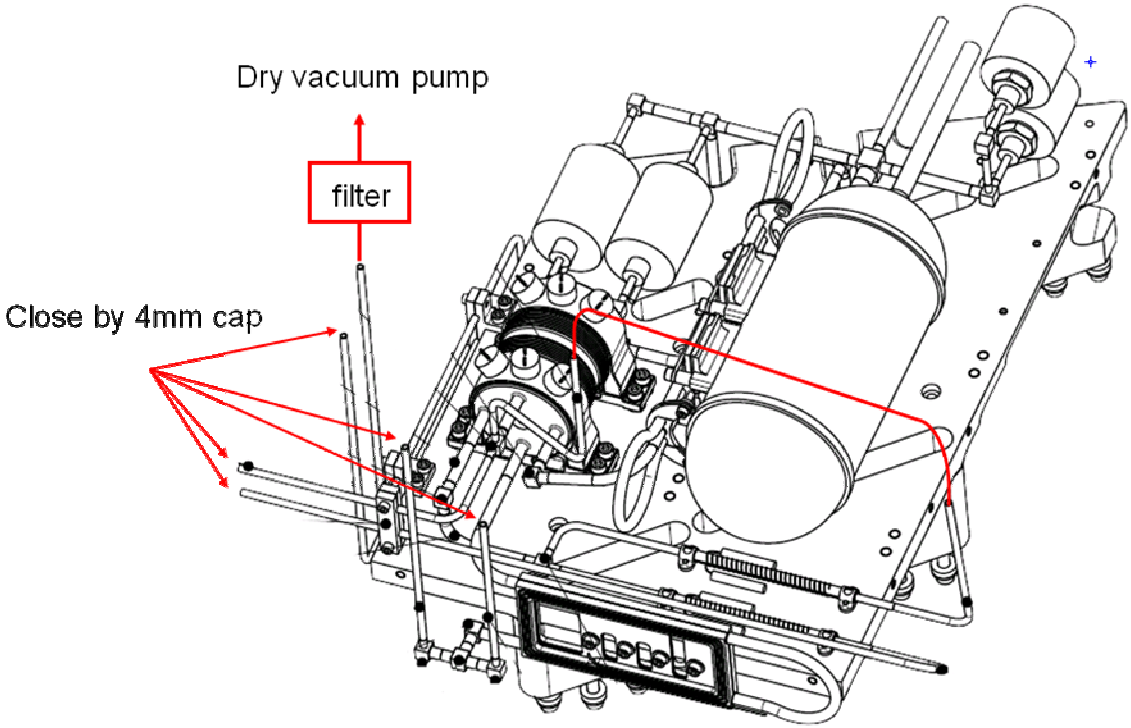

Figure 4-2 TTCB-P limited functional test set-up 3D drawing for DPS

No part of this document may be reproduced and/or disclosed, in any form or by any means, without the prior written permission of SUN YAT-SEN UNIVERSITY.

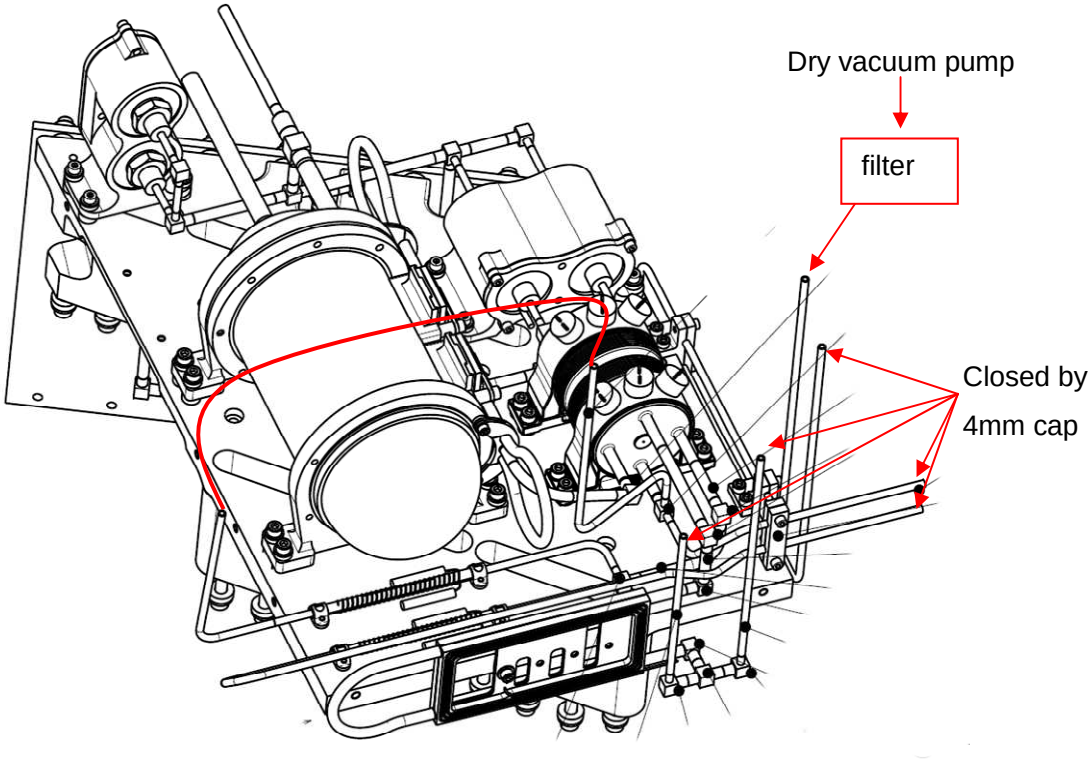

Figure 4-3 TTCB-S limited functional test set-up 3D drawing for DPS

4.2 TTCB limited functional test set-up for APS

In order to check the function performance of APS in TCB, fill the N2 into the TTCB FM via tube used for Helium leak test. During the course, the pressure of the TTCB will be observed by APS.

The increasing pressure checking for APS will be saved by TTCE-A side, and the decreasing pressure checking for APS will be saved by TTCE-B side.

Figure 4-4 and Figure 4-5 are the set-up schematics for APS limited functional check.

No part of this document may be reproduced and/or disclosed, in any form or by any means, without the prior written permission of SUN YAT-SEN UNIVERSITY.

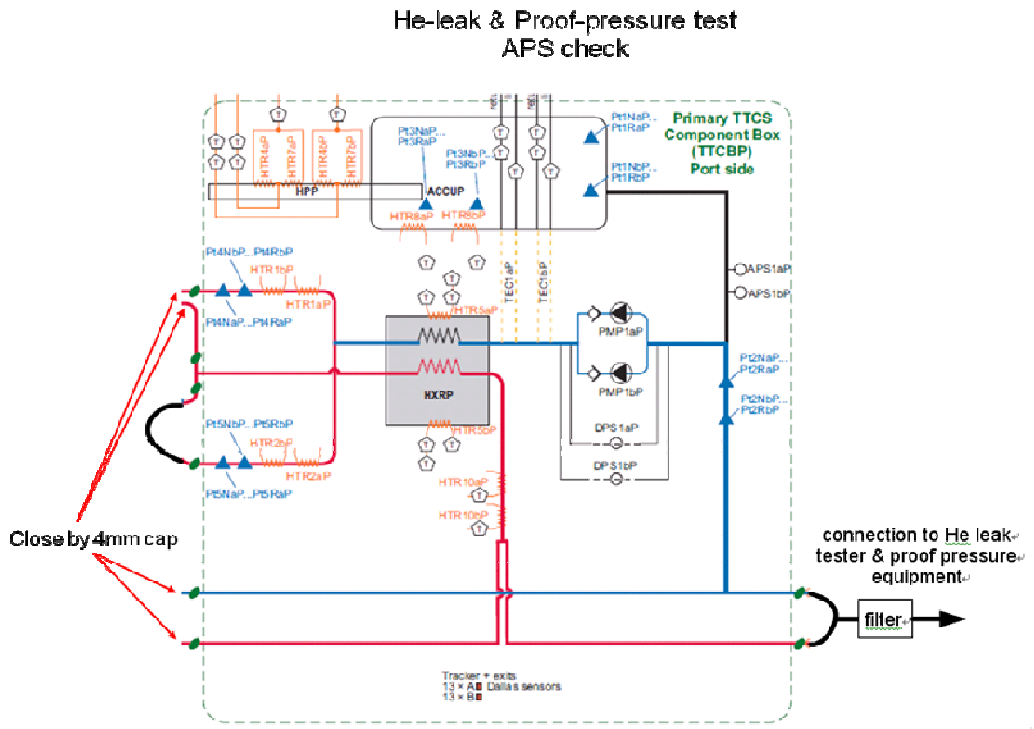

Figure 4-4 TTCB limited functional test set-up 2D drawing for APS

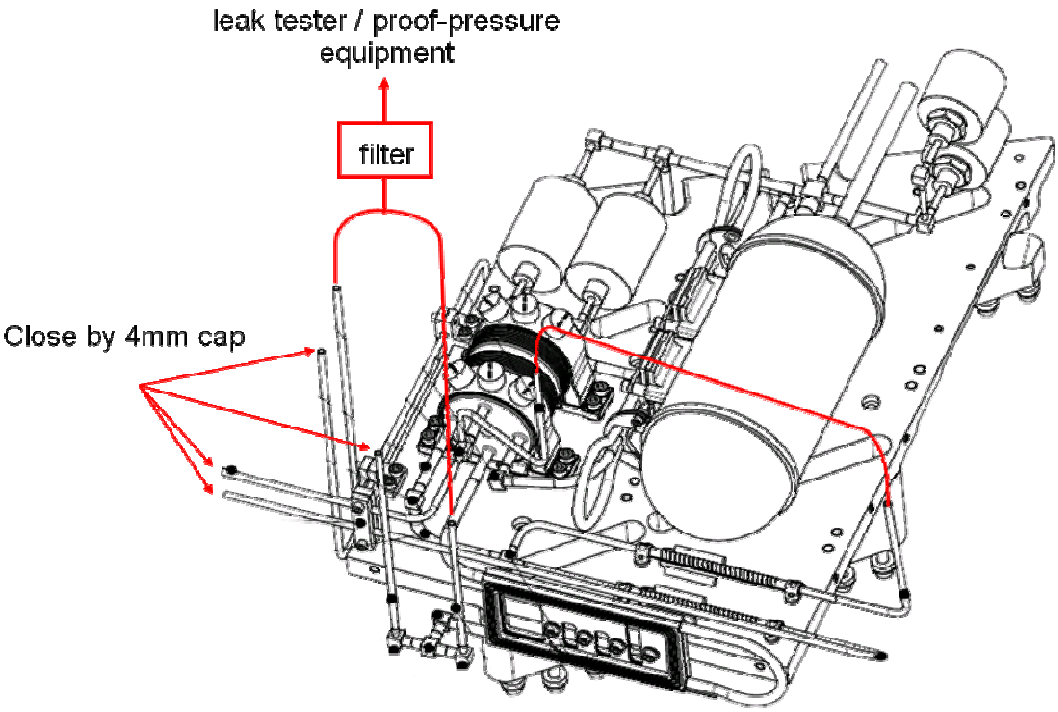

Figure 4-5 TTCB-P limited functional test set-up 3D drawing for APS

No part of this document may be reproduced and/or disclosed, in any form or by any means, without the prior written permission of SUN YAT-SEN UNIVERSITY.

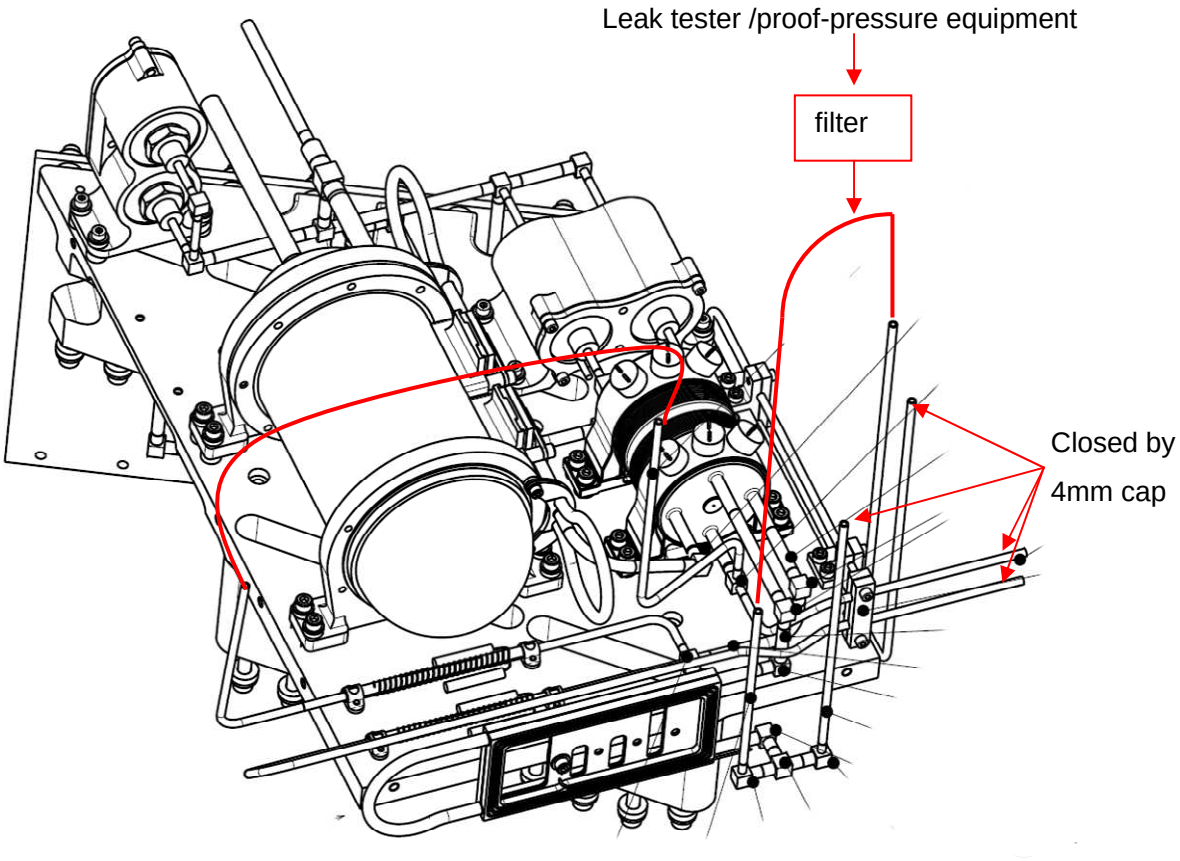

Figure 4-6 TTCB-S limited functional test set-up 3D drawing for APS

No part of this document may be reproduced and/or disclosed, in any form or by any means, without the prior written permission of SUN YAT-SEN UNIVERSITY.

5. TTCB LIMITED FUNCTIONAL CHECK PROCEDURE

5.1 Check procedure for PT1000s, Dallas, Heaters and Peltries

	TTCB temperature sensors, heaters and Peltier elements check		Test model: FM1/FM2		Company:		Date:	
	Fill in by hand.				Engineer:		Location:	
Step	Action		Monitoring		Value	Result	Comment	Time
			TTCB	TTCE_A side				
0.	Cleaning Room Temperature: ℃	Humidity: %RH	Pressure: MPa	$T_{cleaning\ room}$:				
1.	Connect the TTCE to the TTCB, and open the TTCE software							
2.	Read all temperature sensors at room temperature (cleaning room temperature)		Pt1Na Pt1La Pt1Ra	PT01_a N PT01_a L PT01_a R				
			Pt2Na Pt2La Pt2Ra	PT02_a N PT02_a L PT02_a R				

No part of this document may be reproduced and/or disclosed, in any form or by any means, without the prior written permission of SUN YAT-SEN UNIVERSITY.

		Pt3Na Pt3La Pt3Ra	PT03_a N PT03_a L PT03_a R				
		Pt4Na Pt4La Pt4Ra	PT04_a N PT04_a L PT04_a R				
		Pt5Na Pt5La Pt5Ra	PT05_a N PT05_a L PT05_a R				
		DS1a	DS01_a				
		DS2a	DS02_a				
		DS3a	DS03_a				
		DS4a	DS04_a				
		DS5a	DS05_a				
		DS6a	DS06_a				
		DS7a	DS07 a				
		DS8a	DS08_a				
		DS9a	DS09_a				
		DS10a	DS10_a				
		DS11a	DS11_a				
		DS12a	DS12_a				
		DS13a	DS13_a				
		DS14a	DS14_a				

No part of this document may be reproduced and/or disclosed, in any form or by any means, without the prior written permission of SUN YAT-SEN UNIVERSITY.

	Turn on the bottom pre-heater for 5~10secs and turn off **<u>Record voltage and current when on and off the power supply</u>**	HTR1a	PR1_a,	U*I (on) ≥ $T_{cleaning\ room}$+(3~10°C) U*I (off)			
	Turn on the top pre-heater for 5~10secs and turn off **<u>Record voltage and current when on and off the power supply</u>**	HTR2a	PR2_a,	U*I (on) ≥ $T_{cleaning\ room}$+(3~10°C) U*I (off)			
	Turn on the Accumulator control heater with 70% heat power for 5~10secs and turn off **<u>Record voltage and current when on and off the power supply</u>**	HTR4a	FAC_a	U*I (on) ≥ $T_{cleaning\ room}$+(3~10°C) U*I (off)			
	Turn on the start-up heater for 5~10secs and turn off **<u>Record voltage and current when on and off the power supply</u>**	HTR5a	SUP_a	U*I (on) ≥ $T_{cleaning\ room}$+(3~10°C) U*I (off)			

No part of this document may be reproduced and/or disclosed, in any form or by any means, without the prior written permission of SUN YAT-SEN UNIVERSITY.

	Turn on the Ground Testing Accumulator heater 70% heat power for 5~10secs and turn off **<u>Record voltage and current when on and off the power supply</u>**	HTR8a	GAC_a	U*I (on) ≥ $T_{cleaning\ room}$+(3~10°C) U*I (off)			
	Turn on the cold orbit heater for 10secs and turn off **<u>Record voltage and current when on and off the power supply</u>**	HTR10a	COR_a	U*I (on) ≥ $T_{cleaning\ room}$+(3~10°C) U*I (off)			
3.	**Prepare to check Peltier element on the accumulator**						

No part of this document may be reproduced and/or disclosed, in any form or by any means, without the prior written permission of SUN YAT-SEN UNIVERSITY.

	Turn on the Peltier element for 5~10secs and turn off **<u>Record voltage and current when on and off the power supply</u>**	TEC1a	TEC_a	U*I (on) DS05 a ≤$T_{cleaningroom}$-(3~6°C) DS06 a ≤$T_{cleaningroom}$-(3~6°C) DS07 a≥ $T_{cleaning\ room}$+(3~6°C) DS08 a≥ $T_{cleaning\ room}$+(3~6°C) U*I (off)			

No part of this document may be reproduced and/or disclosed, in any form or by any means, without the prior written permission of SUN YAT-SEN UNIVERSITY.

	TTCB temperature sensors, heaters and Peltier elements check		Test model: FM1/FM2		Company:			Date:
	Fill in by hand.				Engineer:			Location:
Step	Action		Monitoring		Value	Result	Comment	Time
			TTCB	TTCE_B side				
0.	Cleaning Room Temperature: ℃	Humidity: %RH	Pressure: MPa	$T_{cleaning\ room}$:				
1.	Check temperature sensors, heaters and Peltier elements for the TTCB_B side							
2.	Read all temperature sensors at room temperature (cleaning room temperature)		Pt1Nb Pt1Lb Pt1Rb	PT01_b N PT01_b L PT01_b R				
			Pt2Nb Pt2Lb Pt2Rb	PT02_b N PT02_b L PT02_b R				
			Pt3Nb Pt3Lb Pt3Rb	PT03_b N PT03_b L PT03_b R				

No part of this document may be reproduced and/or disclosed, in any form or by any means, without the prior written permission of SUN YAT-SEN UNIVERSITY.

		Pt4Nb Pt4Lb Pt4Rb	PT04_b N PT04_b L PT04_b R				
		Pt5Nb Pt5Lb Pt5Rb	PT05_b N PT05_b L PT05_b R				
	Turn on the bottom pre-heater for 5~10secs and turn off **<u>Record voltage and current when on and off the power supply</u>**	HTR1b	PR1_b,	U*I (on) ≥ $T_{cleaning\ room}$+(3~10°C) U*I (off)			
	Turn on the top pre-heater for 5~10secs and turn off **<u>Record voltage and current when on and off the power supply</u>**	HTR2b	PR2_b,	U*I (on) ≥ $T_{cleaning\ room}$+(3~10°C) U*I (off)			

No part of this document may be reproduced and/or disclosed, in any form or by any means, without the prior written permission of SUN YAT-SEN UNIVERSITY.

	Turn on the Accumulator control heater 70% heat power for 5~10secs and turn off **<u>Record voltage and current when on and off the power supply</u>**	HTR4b	FAC_b	U*I (on) ≥ $T_{cleaning\ room}$+(3~10°C) U*I (off)			
	Turn on the start-up heater for 5~10secs and turn off **<u>Record voltage and current when on and off the power supply</u>**	HTR5b	SUP_b	U*I (on) ≥ $T_{cleaning\ room}$+(3~10°C) U*I (off)			
	Turn on the Ground Testing Accumulator heater 70% heat power for 5~10secs and turn off **<u>Record voltage and current when on and off the power supply</u>**	HTR8b	GAC_b	U*I (on) ≥ $T_{cleaning\ room}$+(3~10°C) U*I (off)			
	Turn on the cold orbit heater for 10secs	HTR10b	COR_b				

No part of this document may be reproduced and/or disclosed, in any form or by any means, without the prior written permission of SUN YAT-SEN UNIVERSITY.

3.	**and turn off** **<u>Record voltage and current when on and off the power supply</u>**						
4.	**Prepare to check Peltier element on the accumulator**						
	Turn on the Peltier element for 5~10secs and turn off **<u>Record voltage and current when on and off the power supply</u>**	TEC1b	TEC_b	U*I (on) DS05_b ≤ $T_{cleaningroom}$-(3~6°C) DS06_b ≤ $T_{cleaningroom}$-(3~6°C) DS07 b≥ $T_{cleaning\ room}$+(3~6°C) DS08 b≥ $T_{cleaning\ room}$+(3~6°C) U*I (on)			

No part of this document may be reproduced and/or disclosed, in any form or by any means, without the prior written permission of SUN YAT-SEN UNIVERSITY.

5.2 Limited functional check procedure for APS in TTCB

	TTCB APS reading check		Test model: FM1/FM2		Company:		Date:	
	Fill in by hand.				Engineer:		Location:	
Step	Action		Monitor :TTCE		Value	Result	Comment	Time
	Cleaning Room Temperature: ℃	Humidity: %RH	Pressure:	$T_{cleaning\ room}$:				
Connect the N_2 gas bottle to the TTCB FM, and open the TTCE software								
5.	Fill N_2 gas into TTCB up to 6MPa and record pressure every other 1Mpa		APS_P a		1MPa 2MPa 3MPa 4MPa 5MPa 6MPa			

No part of this document may be reproduced and/or disclosed, in any form or by any means, without the prior written permission of SUN YAT-SEN UNIVERSITY.

	TTCB APS reading check	Test model: FM1/FM2	Company:		Date:	
	Fill in by hand.		Engineer:		Location:	
Step	**Action**	**Monitor :TTCE**	**Value**	**Result**	**Comment**	**Time**
6.	**FOR B_side** **Release N_2 gas and record pressure every other 1MPa** **(after checking APS by TTCE A_side, release the N2 from TTCB to check APS again by TTCE B_side and record three decreasing pressure level)**	APS_P b	6MPa 5MPa 4MPa 3MPa 2MPa 1MPa			

No part of this document may be reproduced and/or disclosed, in any form or by any means, without the prior written permission of SUN YAT-SEN UNIVERSITY.

5.3 Limited functional check procedure for DPS in TTCB

	TTCB APS reading check		Test model: FM1/FM2		Company:		Date:	
	Fill in by hand.				Engineer:		Location:	
Step	Action		Monitoring		Value	Result	Comment	Time
			TTCE					
	Cleaning Room Temperature: ℃	Humidity: %RH	Pressure:	$T_{cleaning\ room}$:				
1.	**FOR A_side** **Switch on vacuum pump and depressurize the TTCB to three different levels and record them, respectively.**		DPS_P a (at least 3 readings)					

No part of this document may be reproduced and/or disclosed, in any form or by any means, without the prior written permission of SUN YAT-SEN UNIVERSITY.

2.	**FOR B_side** **Switch on vacuum pump and depressurize the TTCB to three different levels and record them, respectively.**	DPS_P b (at least 3 readings)				

**********END**********

No part of this document may be reproduced and/or disclosed, in any form or by any means, without the prior written permission of SUN YAT-SEN UNIVERSITY.