FM1

Nationaal Lucht- en Ruimtevaartlaboratorium

National Aerospace Laboratory NLR

Aerospace Industrial Development Corporation

AMS Tracker Thermal Control Subsystem

TTCS FM Condenser foil heater check procedure

AMSTR-NLR-PR-061
ISSUE 3.0
FEBRUARY 2009

Sun Yat-Sen University (SYSU)
National Aerospace Laboratory (NLR)
Instituto Nazionale di Fisica Nucelare (INFN)

	NAME	ORGANISATION/RESPONSIBILITY	SIGNATURE	DATE
PREPARED	J. van Es	NLR		
CHECKED	J. van Es	NLR / AMS TTCS System Eng.		
AGREED	A. Pauw	NLR / TTCS PA		
APPROVED	J. van Es	NLR / AMS TTCS PM		
AUTHORISED				

FILENAME	AMSTR-NLR-PR-XXX_Y.Y_Name_Test_Procedure_issXX.doc	ORDER-/CODENUMBER:	
LAST SAVED	2009.02.11 19:37 by jvanes	DIVISION:	
PRINTED	2009.02.11 19:47	DISTRIBUTION:	Unlimited
PAGES	31	CLASSIFICATION TITLE:	Unclassified

No part of this document may be reproduced and/or disclosed, in any form or by any means, without the prior written permission of NLR.

Distribution list

Company	*FOR**	*Name*	*Comments*
INFN	I	R. Battiston	
		M. Menichelli	
		C. Gargiulo	
		B. Alpat	
		A. Alvino	
		E. Laudi	
AMS	I	M. Capell	
		V. Koutsenko	
		R. Becker	
NLR	I	P. Dieleman	
		J.van Es	
		M. Bardet	
Jacobs Sverdrup	I	T. Martin	
		G. Clark	
AIDC	I	K.M. Sun/	
		B. Hsu	
		W. Min Hsu	
CGS	I	M. Molina C. Vettore	

A = Approval
R = Review
I = Input / Information

An electronic version of this document is available on the AMS TTCS website:
https://ams-ttcs.nlr.nl

No part of this document may be reproduced and/or disclosed, in any form or by any means, without the prior written permission of NLR.

Document change log

Change Ref.	*Section(s)*	*Issue 1.0*
-	All	Initial issue

No part of this document may be reproduced and/or disclosed, in any form or by any means, without the prior written permission of NLR.

Contents

Document change log 3

1 Scope of the document and test objective 5

2 Hardware under test 6

3 Test Requirements 7

4 Test facility description 7

5 Test Procedure in main steps 8

6 References documents 8

7 TTCS Condenser foil heater check procedure 9

7.1 TTCS Condenser foil heater check procedure sheets 9

7.2 Thermal cycle in ambient conditions 9

7.3 Electronics schematics during testing 9

7.4 Location of T-sensors during testing 12

7.5 TTCS Condenser foil heater check procedure sheet 13

8 Appendix A: TTCS Condenser Heater identification 21

9 Appendix B: Foil heater positioning on top plate 28

END OF DOCUMENT 31

(31 pages in total)

No part of this document may be reproduced and/or disclosed, in any form or by any means, without the prior written permission of NLR.

1 Scope of the document and test objective

The procedure in this document describes the TTCS FM Condenser foil heater tests. The objective of the test is to verify no bubbles are present below the glued foil heaters after thermal cycling.

The test is performed in the framework of the AMS02 foil heater bubble check after bubbles were detected on Tracker radiator heaters. The test follows the highlighted path of the AMS02 TCS heater check & recovery plan as shown below:

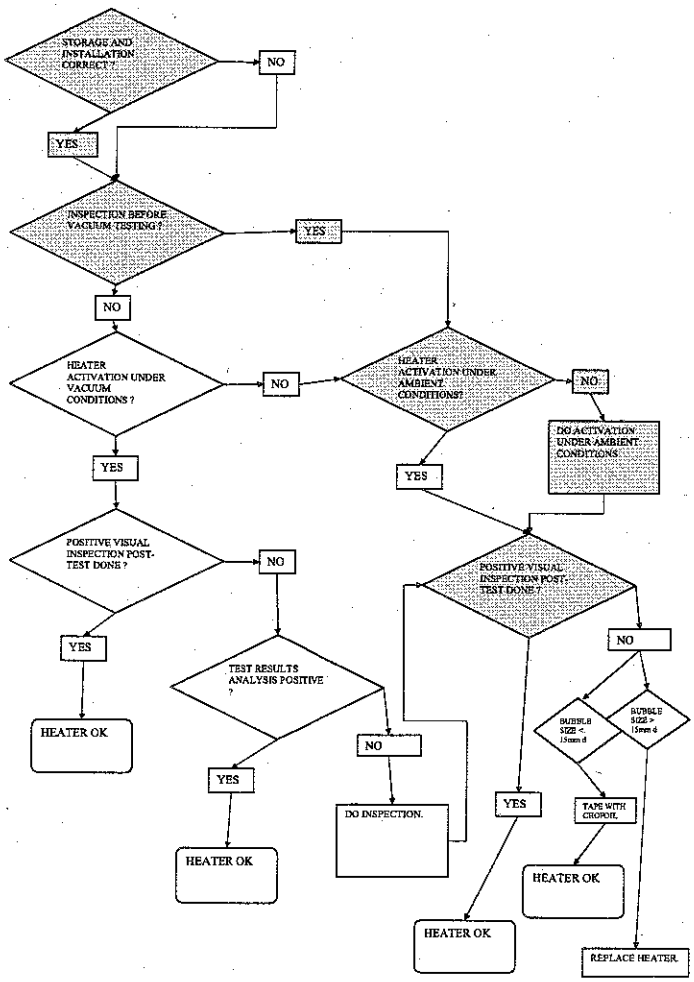

No part of this document may be reproduced and/or disclosed, in any form or by any means, without the prior written permission of NLR.

2 Hardware under test

The FM condensers are shown in Figure 2-1.

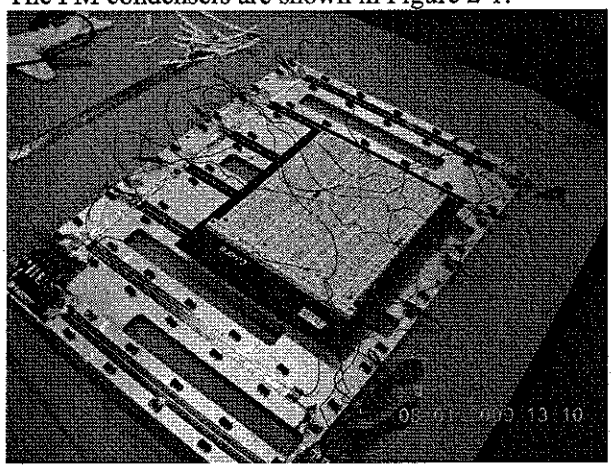

Figure 2-1: FM condenser (with on top a breadboard used as terminal block)

On the condenser 16 Minco Foil Heaters HK27565 with pressure sensitive adhesive 10 are located.

Also 2 liquid line health heaters (FHK 203 with Pressure sensitive adhesive 10) are located at the entrance/exit of the condenser tubes as shown below.

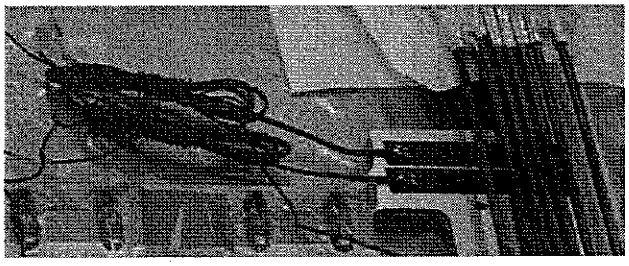

Figure 2-2: Detail of liquid line health heaters

No part of this document may be reproduced and/or disclosed, in any form or by any means, without the prior written permission of NLR.

3 Test Requirements

The test is successful when the following requirements are fulfilled.

- During visual inspection no bubbles are found after thermal cycling
- No >5% change in wire heater resistance is found
- Electrical insulation resistances >2MOhm

4 Test facility description

The test is performed at AIDC in Taichung the following facilities and equipment are used:

- Multi-meter
- 2 Power supplies 0-28 Volt, 0-5 A (nominal 3.5 A)
- A bare minimum of 4 Temperature sensor to measure the maximum temperatures of the heaters
- Electrical Breadboard used as terminal block for the electrical wires

No part of this document may be reproduced and/or disclosed, in any form or by any means, without the prior written permission of NLR.

5 Test Procedure in main steps

The main test procedure steps are:

1. Perform foil heater visual inspection
2. Thermal cycling in ambient conditions
3. Perform foil heater visual inspection
4. Check foil heater electrical and insulation resistance

6 References documents

<In case you refer to other procedures or documents please list them here>

	Title	Number	Date
RD-1	TTCS Requirements Verification Matrix FM H/W	AMSTR-NLR-PL-02 Issue 1.0	April 2007
RD-2	Condenser heaters installation procedure	AMSTR-NLR-PR-043 Issue 4	December 2008
RD-3	QM-FM Condenser gluing procedure	AMSTR-NLR-PR-038 Issue 6	December 2008

No part of this document may be reproduced and/or disclosed, in any form or by any means, without the prior written permission of NLR.

7 TTCS Condenser foil heater check procedure

7.1 TTCS Condenser foil heater check procedure sheets

The procedure sheets shall be filled in by hand, and shall accompany the FM condensers during it's lifetime in order to be able to show the procedure was followed.

7.2 Thermal cycle in ambient conditions

The thermal cycling of the heaters is schematically shown below.

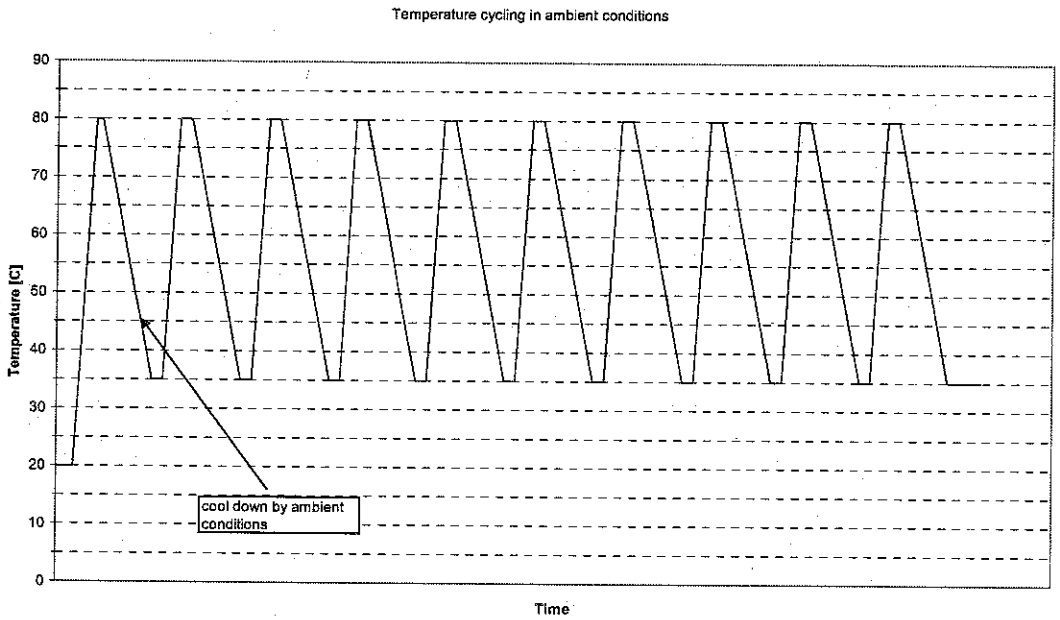

Figure 7-1: Temperature cycle

7.3 Electronics schematics during testing

The electronics schematics during testing differs from the flight schematics for 2 reasons:

1. Set-up to be compliant with 0-28 V power supplies
2. Cycle time reductions

The schematic is as follows:

No part of this document may be reproduced and/or disclosed, in any form or by any means, without the prior written permission of NLR.

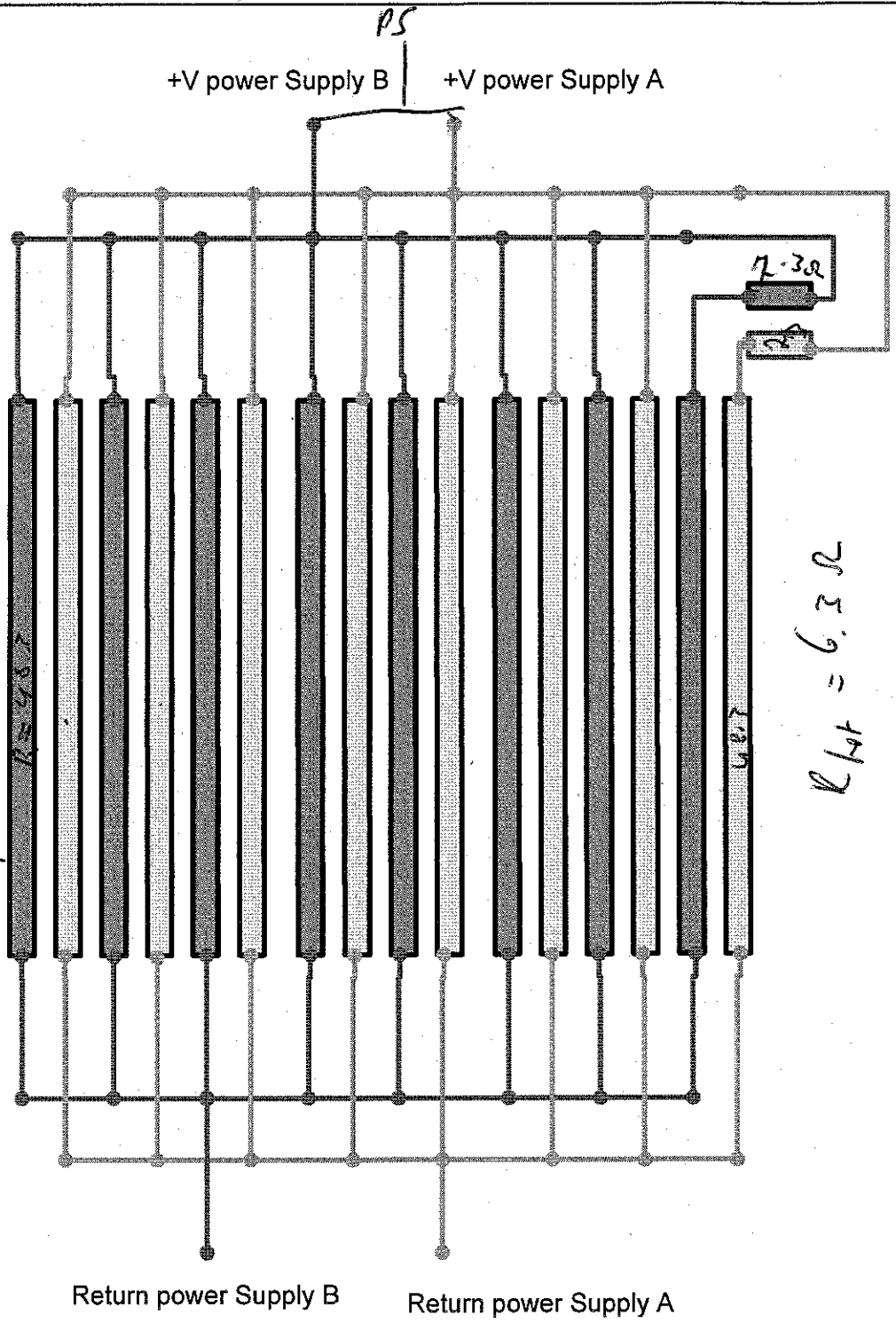

Figure 7-2: Heater schematic during condenser heater cycling (all A heaters in parallel & all B heaters in parallel)

No part of this document may be reproduced and/or disclosed, in any form or by any means, without the prior written permission of NLR.

To provide the heaters with enough power all the eight (8) A condenser heaters are in parallel (in orange). The liquid line health heater is connected in series with one of the eight branches. The B heaters are connected in the same way and connected to a separate power supply. With two (one A and one B) power supplies all heaters are switched on at the same time providing a total power of 130 Watts.

Based on a rough calculation the heat up cycle with the current set-up is approximately 25 minutes.

Heating up cycle ROM time estimate as function of power

CP [J/kgK]	DeltaT	Mass condenser [kg]	Required energy (J)	Power (W)	Time required [min]
880	45	4.5	178200	130.07	22.83

It is advised to insulate the top (heater sides) of the condenser to shorten the heat up time.
In Table 7-1 details on currents, powers and power densities can be found. The power densities are just above (0.49 W/cm^2) the flight requirements for foil heaters (max 0.465 W/cm^2). If needed a voltage of 19.5 V will bring the densities below this requirement.

Voltage [V]	20
R(condenser) [Ohm]	48.4
R(liqlinefoil) [Ohm]	7.3
Heater area HHCON heaters [cm^2]	16.9
Heater area HHLL heaters [cm^2]	6.25
8 parallel branches (7 x HHCONXXX heater, and one HHCON heater in series with one HHLL heater)	
R (Parallel circuit heaters) [Ohm]	6.15
I [A] total	3.25
P [Watt]	65.03
Voltage drop series branch [V]	20
Voltage drop 48.4 Ohm	17.38
Voltage drop 7.3 Ohm	2.62
P series branch [W]	7.18
I series branch [A]	0.36
P series 48.8 Ohm heater	6.24
P series 7.3 Ohm heater	0.94
P normal branch	8.26
P total check	65.03
Density normal branch heater [W/cm2]	0.49
Density series branch 48.4 Ohm heater [W/cm2]	0.37
Density series branch 7.3 Ohm heater [W/cm2]	0.15

R tot

Table 7-1: Power, currents and max power densities during thermal cycling

No part of this document may be reproduced and/or disclosed, in any form or by any means, without the prior written permission of NLR.

7.4 Location of T-sensors during testing

A minimum of 4 T-sensors is needed more T-sensors are allowed. In Figure 7-3 the temperature locations are indicated.

One T-sensor should be located on top of the heater on the strain relief as this location is attached to the smallest thermal mass and therefore the highest temperature is expected. This one on the inside A

A second T-sensor should be located on the liquid line health heater as this heater has the lowest power density and it is good to know the maximum temperature of this heater. Put this one on the heater attached in a branch B.

A third one should be located on a central heater A as there also high temperatures are expected. A fourth one on the same location but on heater B.

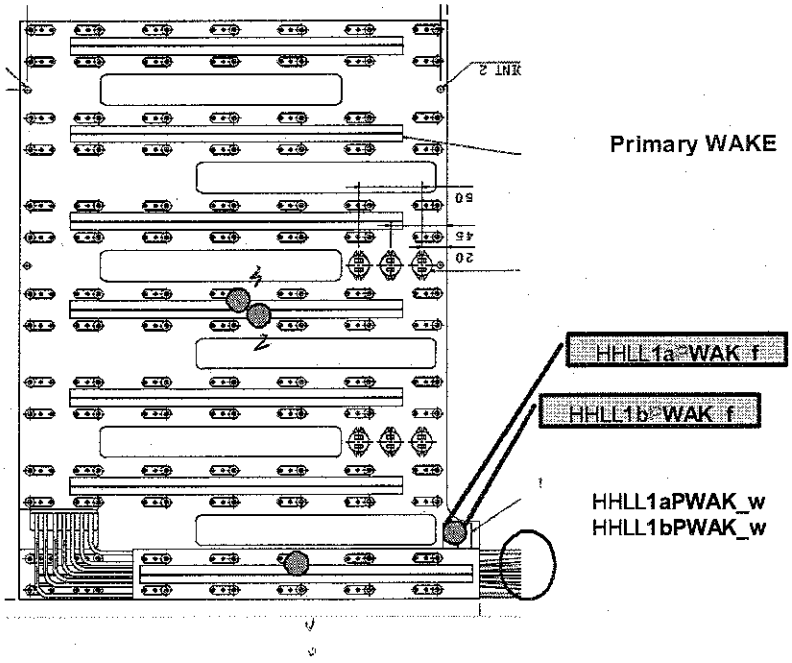

Figure 7-3: Locations of T-sensors

All maximum and minimum T's of the sensors during the 10 cycles should be documented or logged.

No part of this document may be reproduced and/or disclosed, in any form or by any means, without the prior written permission of NLR.

7.5 TTCS Condenser foil heater check procedure sheet

	TTCS Condenser foil heater check procedure sheets		company: A2DC		date: 2009. 02. 16	
	Fill in by hand.		engineer: Shuck Aswin		location: A2DC	
Step	Action	Monitoring	Value	**Result**	Comment	√
1.	Record condenser model (P-ram, P-wake, S-ram, S-wake)	T.I. description	- PW			
2.	Record model (FM Primary Wake/ FM Primary RAM/ FM Secondary Wake/ FM Secondary RAM/)	model FM1	- FM1 PW			
3.	**Visual inspection prior to thermal cycling**					
4.	**Check if no bubbles are present below the heaters, take digital picture and write down time stamp** **<u>Name heater (e.g. HHCONWAKEP1a)</u>**		**Bubbles yes/no**	ok No Bubbles	**Write down Time stamp of the picture**	
5.	Name: HHCONWAKEP1a		Yes/no	ok	time = 10:15 file : 3268 ~ 3271	
6.	Name: HHCONWAKEP1b		Yes/no	=		
7.	Name: HHCONWAKEP2a		Yes/no	=	time : 10:14 file : 3264 ~ 3267	
8.	Name: HHCONWAKEP2b		Yes/no	=	+	

	TTCS Condenser foil heater check procedure sheets		company:		date:	
	Fill in by hand.		engineer:		location:	
Step	Action	Monitoring	Value	Result	Comment	√
9.	Name: HH CONWAKEP 3a		Yes/no	no	time: 10:14 file: 3260~3263	
10.	Name: HH CONWAKEP 3b		Yes/no	=		
11.	Name: HH CONWAKEP 4a		Yes/no	=	time: 10:14 file: 3256~3259	
12.	Name: HH CONWAKEP 4b		Yes/no	=		
13.	Name: HH CONWAKEP 5a		Yes/no	=	time: 10:13 file: 3252~3255	
14.	Name: HH CONWAKEP 5b		Yes/no	=		
15.	Name: HH CONWAKEP 6a		Yes/no	=	time: 10:13 file: 3248~3251	
16.	Name: HH CONWAKEP 6b		Yes/no	=		
17.	Name: HH CONWAKEP 7a		Yes/no	=	time: 15:10 file: 3362~3364	
18.	Name: HH CONWAKEP 7b		Yes/no	=		

Name: HH CONWAKEP 8a =

	TTCS Condenser foil heater check procedure sheets		company:		date:	
	Fill in by hand.		engineer:		location:	
Step	Action	Monitoring	Value	Result	Comment	√
19.	Name: HHCONWAKZP8b		Yes/no	no	time: 10:12 file: 3244 ~ 3247	
20.	Name (liquid line health heater): HHLL1a PWAK_f		Yes/no	2	time: 10:31 file: 3272 ~ 3273	
21.	Name (liquid line health heater): HHLL1b PWAK_f		Yes/no	2		
22.	**Store all digital pictures on hard disk (make sure in advance you are sure the time stamps or file names are as you documented in this table)**					
23.	Record test equipment used (multi-meter)	manufacturer, type	Agilent	34401A 6½ Digit Multimeter		
24.	Record power supplies	manufacturer, type	Agilent	6653A 0-35V/0-15A	system DC power supply	
25.	Record type temperature sensor to monitor the foil heater temperature	manufacturer, type	NATIONAL INSTRUMENTS		NI cDAQ-9172	
26.	Attach temperature sensors on top of three heaters sections as indicated in Figure 7-3.			ok		
27.	Connect the heaters according to the schematic in Figure 7-2 to the two power supplies.			ok	we use one power supply to one condenser	

one supply → A, B

	TTCS Condenser foil heater check procedure sheets		company:		date:	
	Fill in by hand.		engineer:		location:	
Step	Action	Monitoring	Value	**Result**	Comment	√
28.	Put 20 V to heaters (be sure the power supply can handle 3.3 A current or more)				we use 22 V	
29.	Record time and temperatures of next 2 steps	**Time**	2008.02.17	**Temperature**		
30.	Switch-off the heaters as soon as they reach 80 °C	Time cold1	11:44 → start	, cold1:		
		Time hot1	12:26			
		Time cold2	12:40			
		Time hot2	13:13			
		Time cold3	13:27			
		Time hot3	14:00			
		Time cold4	14:14			
		Time hot4	14:41			
		Time cold5	14:55			
		Time hot5	15:04			
		Time cold6	15:17			
		Time hot6	15:27			
		Time cold7	15:39			
		Time hot7	15:48			
		Time cold8	16:01			

	TTCS Condenser foil heater check procedure sheets		company:		date:	
	Fill in by hand.		engineer:		location:	
Step	Action	Monitoring	Value	Result	Comment	√
		Time hot8 Time cold9 Time hot9 Time cold10 Time hot10 Time cold 11	16:10 16:22 16:30 16:40 16:52 17:04			
31.	Wait until the heaters reach 35 °C					
32.	Repeat steps 28 to 31 nine (9) times					
33.	Disconnect power supply				Stop at: 17:15	
34.	Check the electrical resistance of the heater groups				Group A = 6.9 Ω Group B = 6.9 Ω Total = 3.5 Ω	
35.	**Visual inspection after thermal cycling**					
36.	**Check if no bubbles are present below the heaters, take digital picture and write down time stamp** **<u>Name heater (e.g. HHCONWAKEP1a)</u>**		**Bubbles yes/no**	No bubble	**Write down Time stamp of the picture**	

	TTCS Condenser foil heater check procedure sheets		company:		date:	
	Fill in by hand.		engineer:		location:	
Step	Action	Monitoring	Value	Result	Comment 2009/02/17	√
37.	Name: HH CONWAKEP1a		Yes/no	no	time: 18:29 file: p2947 2948 ~ 2955	
38.	Name: HH CONWAKEP1b		Yes/no	no		
39.	Name: HH CONWAKEP2a		Yes/no	=	time: 18:31	
40.	Name: = 2b		Yes/no	=	file: 2956 ~ 2963	
41.	Name: HH CONWAKEP3a		Yes/no	=	time: 18:33 file: 2964 ~ 2968	
42.	Name: = 3b		Yes/no	=		
43.	Name: = 4a		Yes/no	=	time: 18:34 file: 2969 ~ 2974	
44.	Name: = 4b		Yes/no	=		
45.	Name: = 5a		Yes/no	=	time: 18:35 file: 2975 ~ 2979	
46.	Name: = 5b		Yes/no	=		

	TTCS Condenser foil heater check procedure sheets		company:		date:	
	Fill in by hand.		engineer:		location:	
Step	Action	Monitoring	Value	Result	Comment	√
47.	Name: HH CONWAKKP 6a		Yes/no	no	time: 18:37 file: 2980~2985	
48.	Name: = 6b		Yes/no	=		
49.	Name: = 7a		Yes/no	=	time: 18:40 file: 2994~2997	
50.	Name: = 7b		Yes/no	=		
51.	Name: = 8a 8b		Yes/no	=	time: 18:38 file: 2982~2990	
52.	Name (liquid line health heater): HHLL1aPWAK-f		Yes/no	no	time: 18:39 file: 2991~2993	
53.	Name (liquid line health heater): HHLL1bPWAK-f		Yes/no	=		
54.	Electrical resistance check					
55.	Check the electrical resistance of the heater group A (in the final series configuration)	Design value is 387,2Ohm	See comment	299.34 Ω	Compare with the value of the filled sheets of AMSTR-NLR-043 "Condenser heater installation procedure" and	

	TTCS Condenser foil heater check procedure sheets		company:		date:	
	Fill in by hand.		engineer:		location:	
Step	Action	Monitoring	Value	**Result**	Comment	√
					write the value here	
56.	Check the electrical resistance of the heater group B (in the final series configuration)			See comment ≈98.53Ω	Compare with the value of the filled sheets of AMSTR-NLR-043 "Condenser heater installation procedure and write the value here	
57.	Check the electrical insulation resistance of the heater group		>2MOhm	open		
58.	Check the resistance of LLHH A and record	resistance	7.3 Ohm +/- 10%	7.29 Ω		
59.	Check the resistance of LLHH ~~A~~ B and record	resistance	7.3 Ohm +/- 10%	7.962 Ω		
60.	Check the electrical insulation resistance of LLHH A		>2MOhm	open		
61.	Check the electrical insulation resistance of LLHH B		>2MOhm	open		
62.	End Procedure					

8 Appendix A: TTCS Condenser Heater identification

In the following tables are described the correspondence between the ID heater on TTCS loop are related to the heater P/N provided by the supplier:

Location/	Condenser	ID heater	P/N
Inlet/outlet foil heater	QM	HHLL1aPW_f	
		HHLL1bPW_f	
	PW	HHLL1aPWAK_f	
		HHLL1bPWAK_f	
	SR	HHLL1aSRAM_f	
		HHLL1bSRAM_f	
	PR	HHLL1aPRAM_f	
		HHLL1bPRAM_f	
	SW	HHLL1aSWAK_f	
		HHLL1bSWAK_f	
Condenser foil heater	QM	HHCONWP7a	
		HHCONWP7b	
	PW	HHCONWAKEP1a	
		HHCONWAKEP1b	
		HHCONWAKEP2a	
		HHCONWAKEP2b	
		HHCONWAKEP3a	
		HHCONWAKEP3b	
		HHCONWAKEP4a	
		HHCONWAKEP5a	
		HHCONWAKEP5b	
		HHCONWAKEP6a	
		HHCONWAKEP6b	
		HHCONWAKEP7a	
		HHCONWAKEP7b	
		HHCONWAKEP8b	
		HHCONWAKEP8a	

SR	HHCONRAMS1a
	HHCONRAMS1b
	HHCONRAMS2a
	HHCONRAMS2b
	HHCONRAMS3a
	HHCONRAMS3b
	HHCONRAMS4a
	HHCONRAMS5a
	HHCONRAMS5b
	HHCONRAMS6a
	HHCONRAMS6b
	HHCONRAMS7a
	HHCONRAMS7b
	HHCONRAMS8b
	HHCONRAMS8a
PR	HHCONRAMP1a
	HHCONRAMP1b
	HHCONRAMP2a
	HHCONRAMP2b
	HHCONRAMP3a
	HHCONRAMP3b
	HHCONRAMP4a
	HHCONRAMP5a
	HHCONRAMP5b
	HHCONRAMP6a
	HHCONRAMP6b
	HHCONRAMP7a
	HHCONRAMP7b
	HHCONRAMP8b
	HHCONRAMP8a
SW	HHCONWAKES1a
	HHCONWAKES1b
	HHCONWAKES2a
	HHCONWAKES2b
	HHCONWAKES3a

		HHCONWAKES3b
		HHCONWAKES4a
		HHCONWAKES5a
		HHCONWAKES5b
		HHCONWAKES6a
		HHCONWAKES6b
		HHCONWAKES7a
		HHCONWAKES7b
		HHCONWAKES8b
		HHCONWAKES8a
Liquid line wire heater	QM	HHLL1aPW_w
		HHLL1bPW_w
	PW	HHLL1aPWAK_w
		HHLL1bPWAK_w
	SR	HHLL1aSRAM_w
		HHLL1bSRAM_w
	PR	HHLL1aPRAM_w
		HHLL1bPRAM_w
	SW	HHLL1aSWAK_w
		HHLL1bSWAK_w

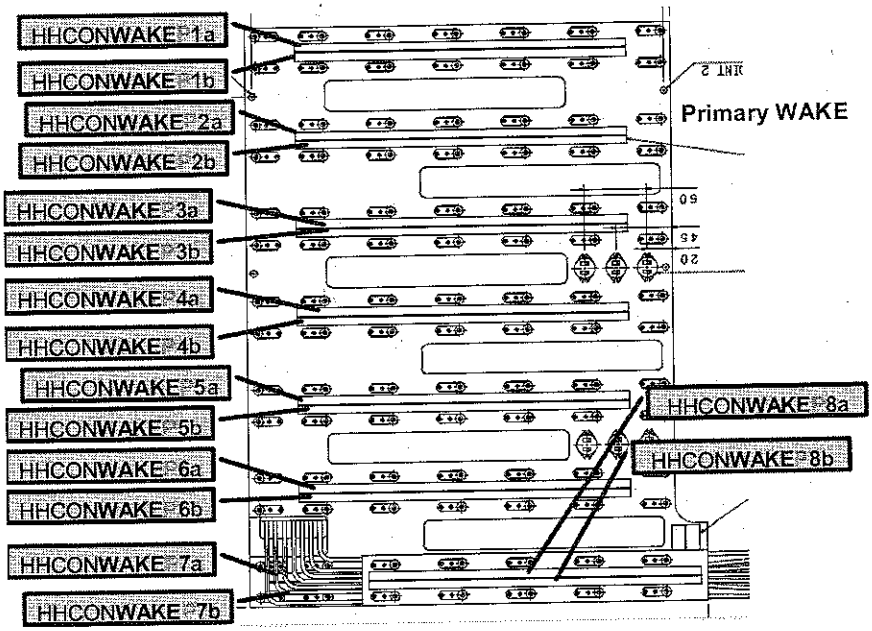
HHCONWAKE_1a
HHCONWAKE_1b
HHCONWAKE_2a
HHCONWAKE_2b
HHCONWAKE_3a
HHCONWAKE_3b
HHCONWAKE_4a
HHCONWAKE_4b
HHCONWAKE_5a
HHCONWAKE_5b
HHCONWAKE_6a
HHCONWAKE_6b
HHCONWAKE_7a
HHCONWAKE_7b
HHCONWAKE_8a
HHCONWAKE_8b
Primary WAKE

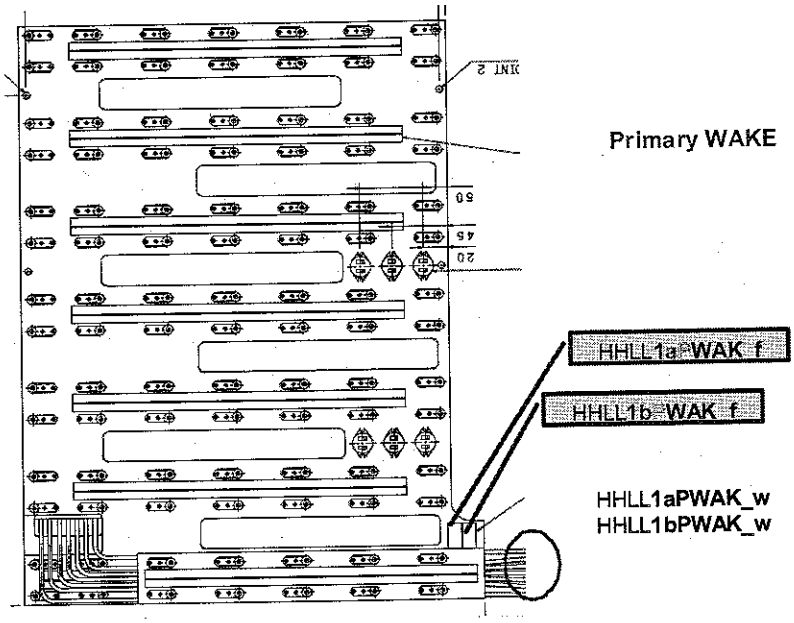
Primary WAKE
HHLL1a_WAK_f
HHLL1b_WAK_f
HHLL1aPWAK_w
HHLL1bPWAK_w

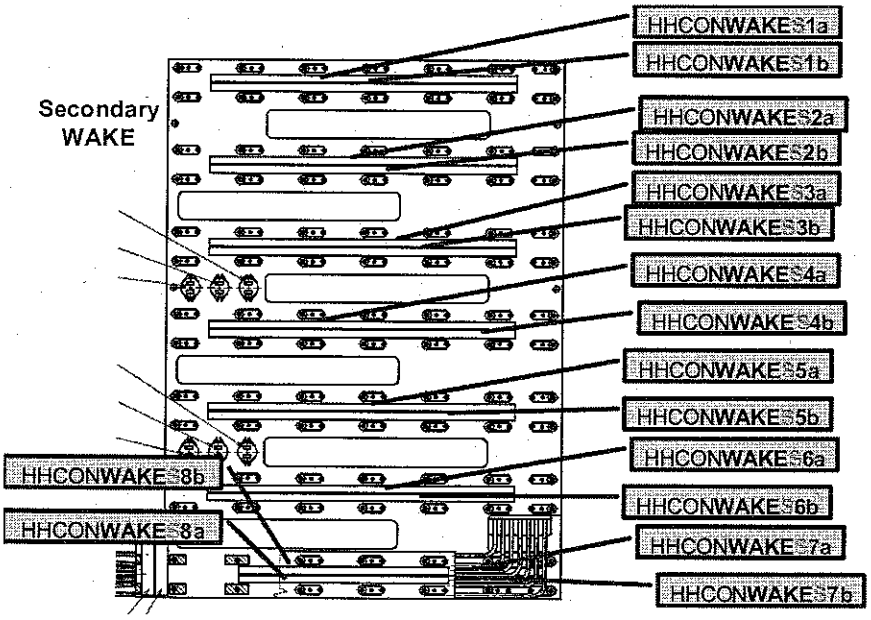
Secondary WAKE
HHCONWAKE_1a
HHCONWAKE_1b
HHCONWAKE_2a
HHCONWAKE_2b
HHCONWAKE_3a
HHCONWAKE_3b
HHCONWAKE_4a
HHCONWAKE_4b
HHCONWAKE_5a
HHCONWAKE_5b
HHCONWAKE_6a
HHCONWAKE_6b
HHCONWAKE_7a
HHCONWAKE_7b
HHCONWAKE_8b
HHCONWAKE_8a

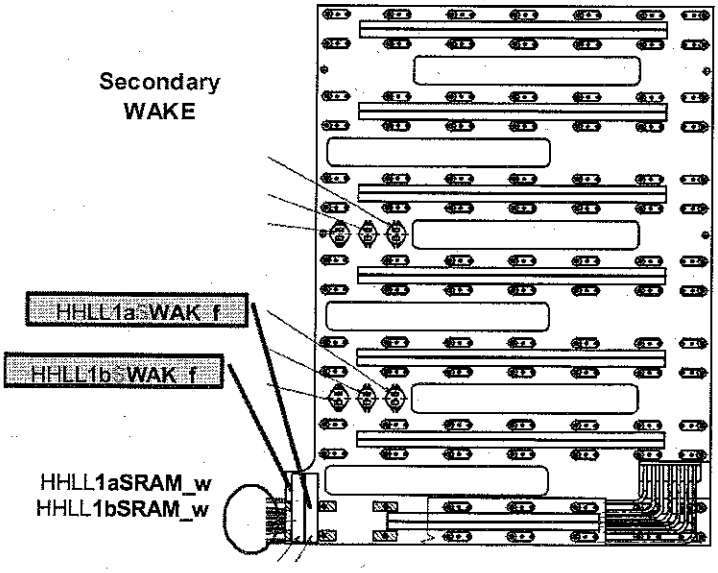
Secondary WAKE
HHLL1a_WAK_f
HHLL1b_WAK_f
HHLL1aSRAM_w
HHLL1bSRAM_w

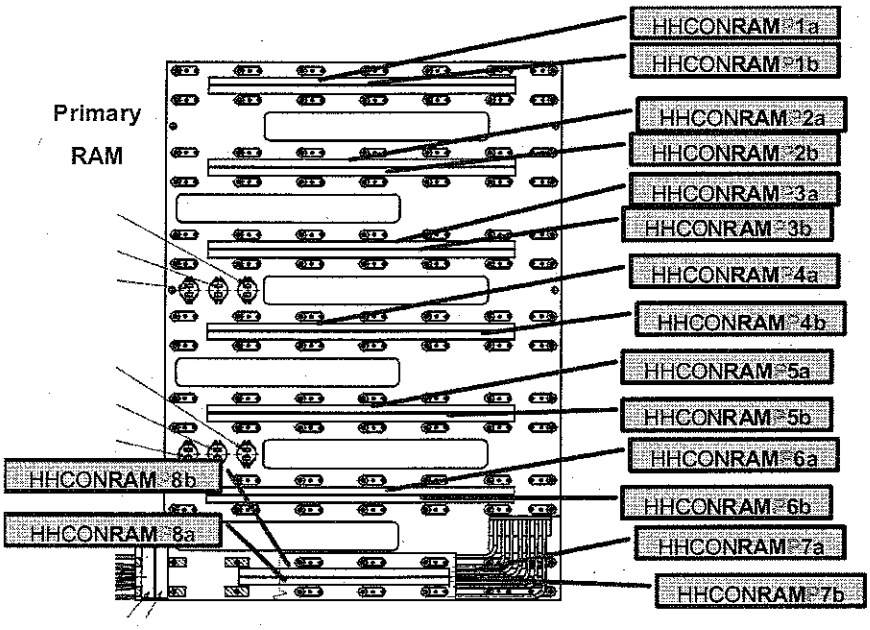
Primary
RAM
HHCONRAM_1a
HHCONRAM_1b
HHCONRAM_2a
HHCONRAM_2b
HHCONRAM_3a
HHCONRAM_3b
HHCONRAM_4a
HHCONRAM_4b
HHCONRAM_5a
HHCONRAM_5b
HHCONRAM_6a
HHCONRAM_6b
HHCONRAM_7a
HHCONRAM_7b
HHCONRAM_8b
HHCONRAM_8a

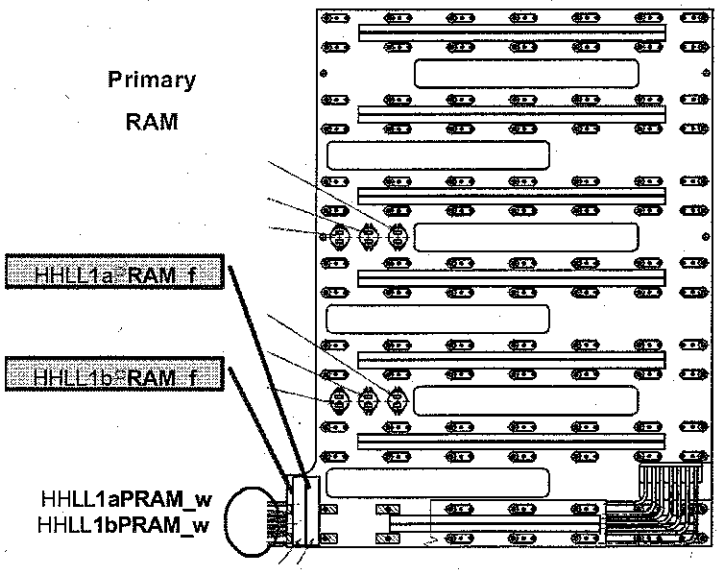
Primary
RAM
HHLL1a_RAM_f
HHLL1b_RAM_f
HHLL1aPRAM_w
HHLL1bPRAM_w

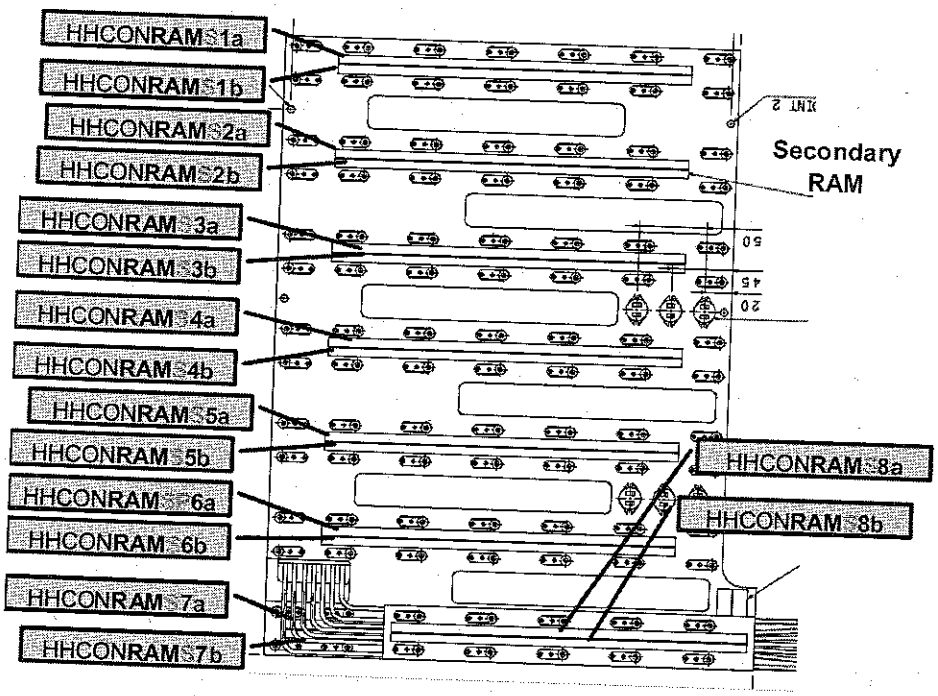
HHCONRAM_1a
HHCONRAM_1b
HHCONRAM_2a
HHCONRAM_2b
HHCONRAM_3a
HHCONRAM_3b
HHCONRAM_4a
HHCONRAM_4b
HHCONRAM_5a
HHCONRAM_5b
HHCONRAM_6a
HHCONRAM_6b
HHCONRAM_7a
HHCONRAM_7b
HHCONRAM_8a
HHCONRAM_8b
Secondary RAM

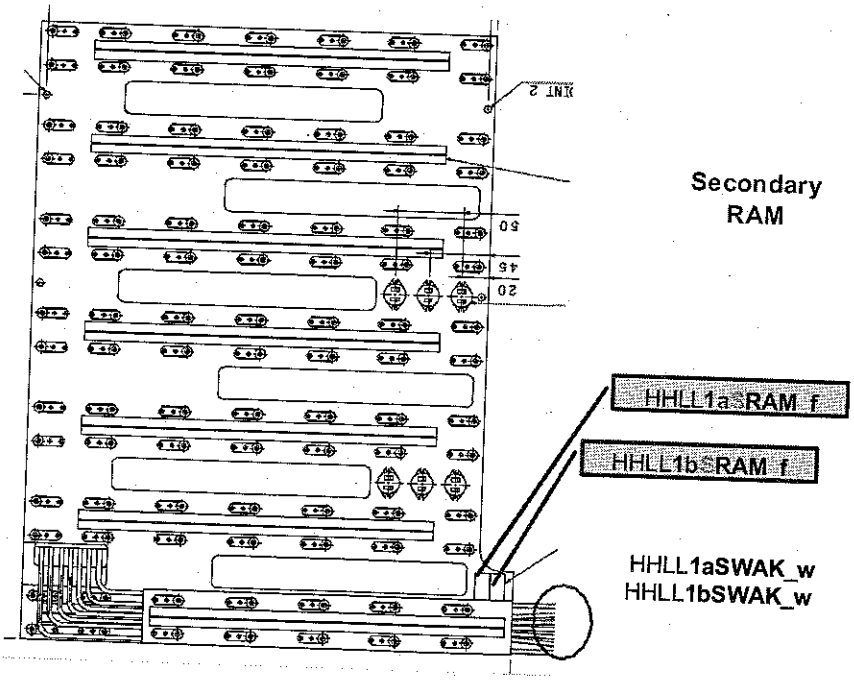
Secondary RAM
HHLL1a_RAM_f
HHLL1b_RAM_f
HHLL1aSWAK_w
HHLL1bSWAK_w

9 Appendix B: Foil heater positioning on top plate

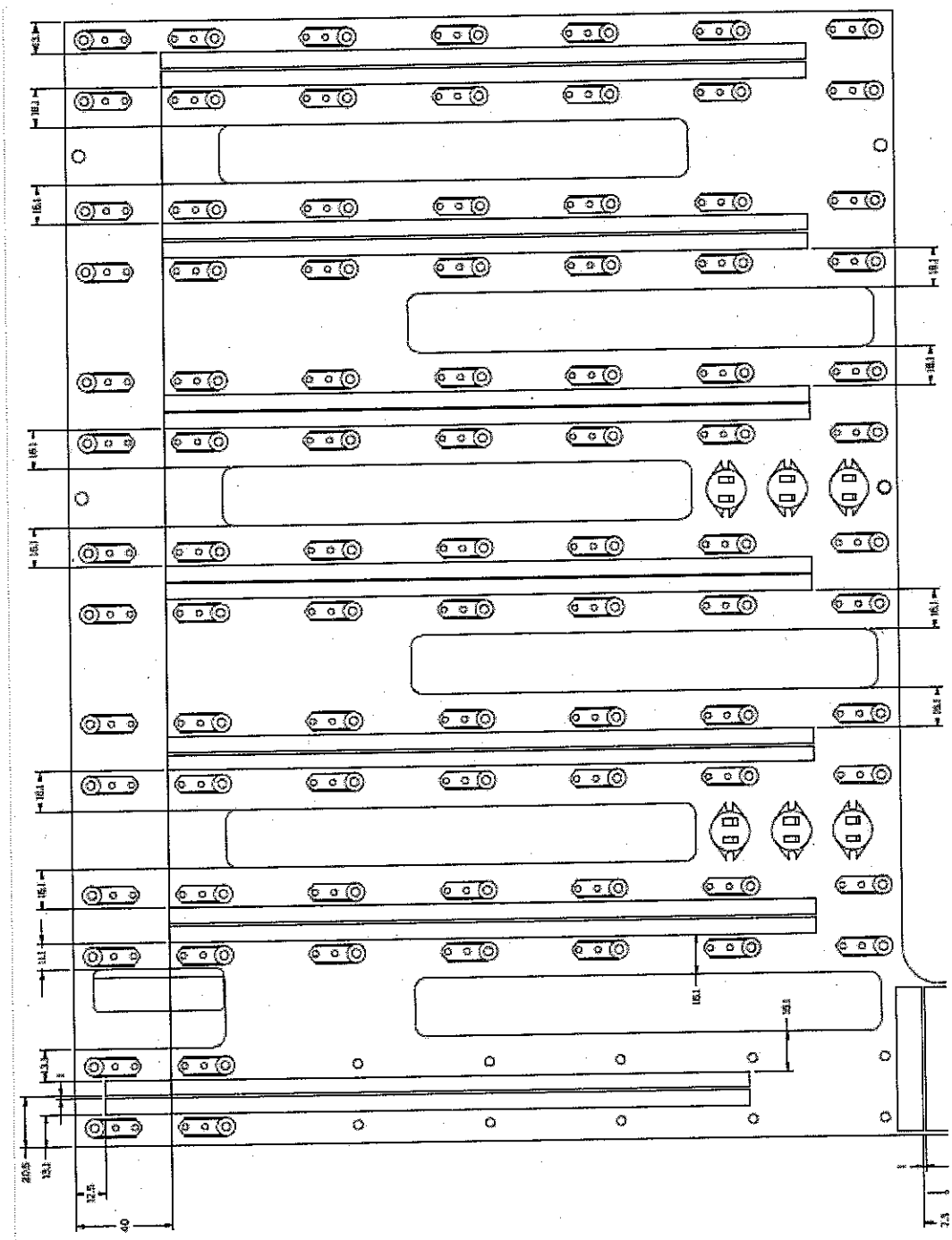

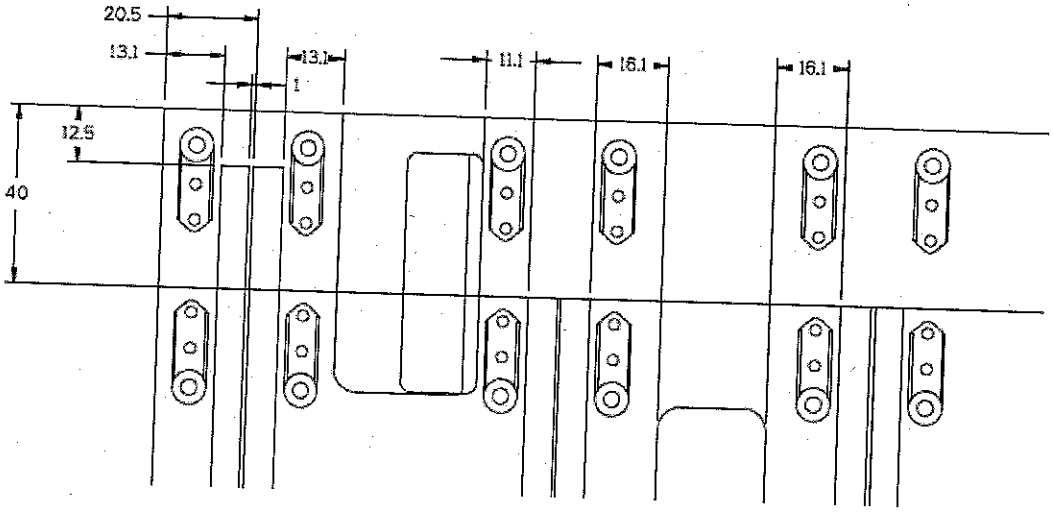
20.5
13.1
13.1
1
11.1
16.1
16.1
12.5
40

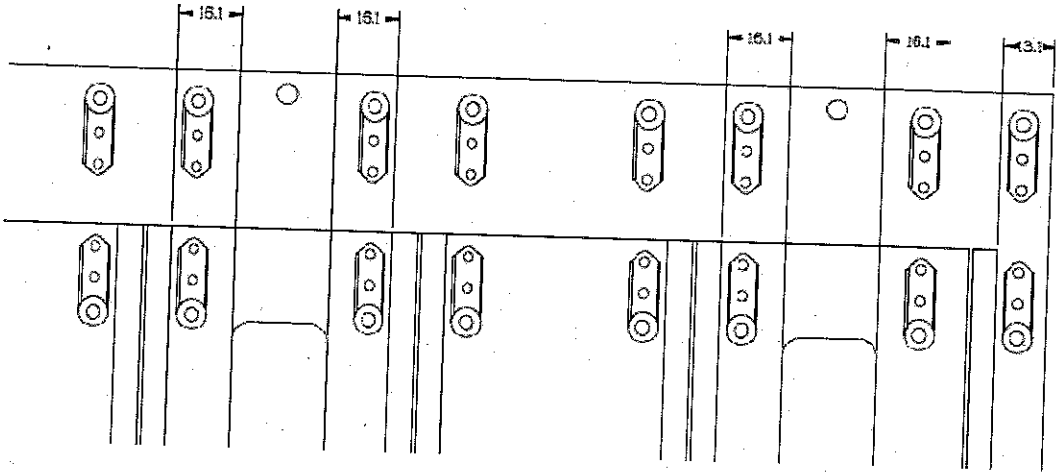
16.1
16.1
16.1
16.1
3.1

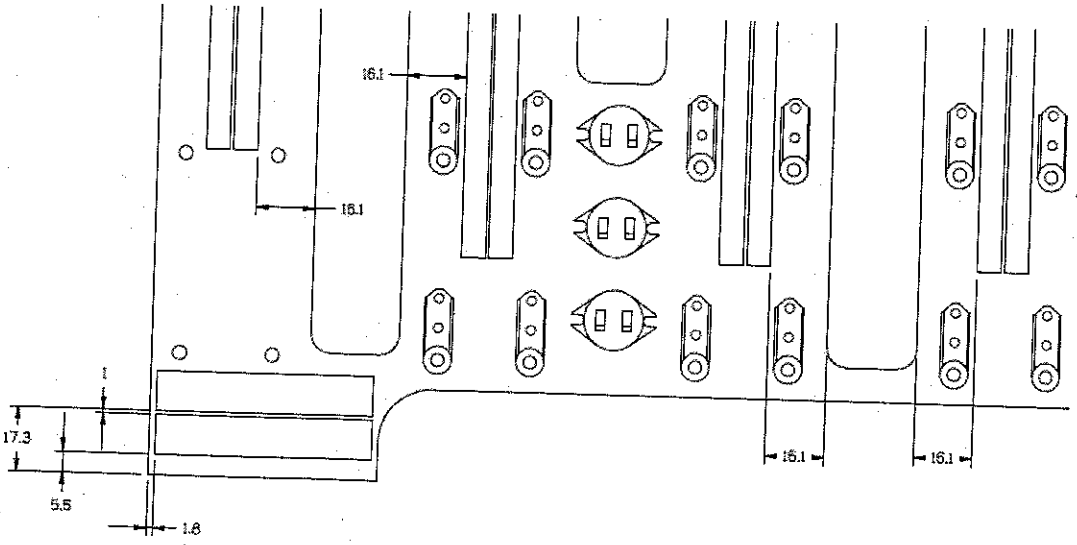
16.1
16.1
1
17.3
5.5
1.6
16.1
16.1

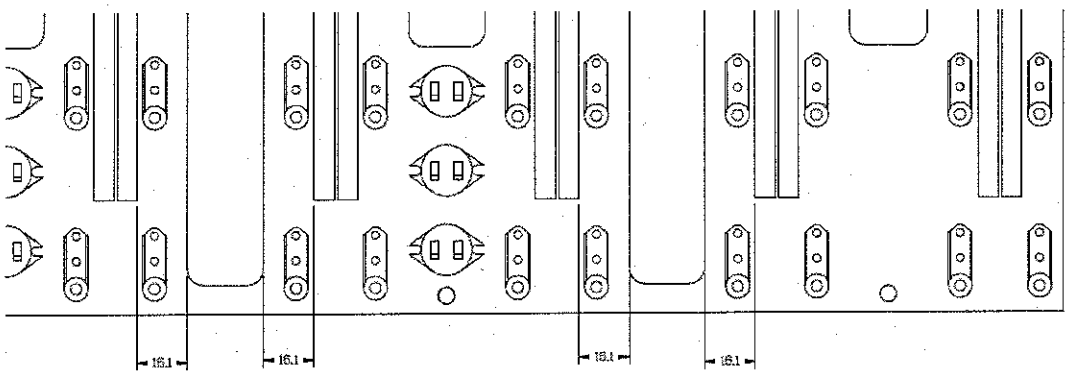

Foil heater positioning on top strain relief

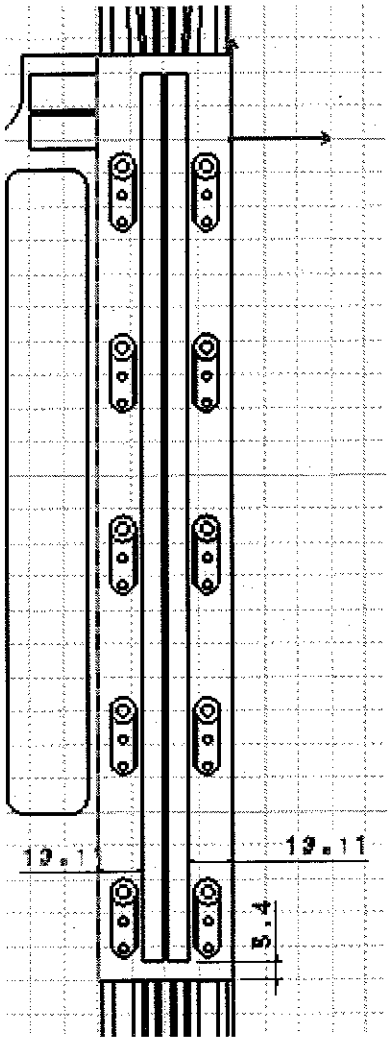

END OF DOCUMENT