### 7.5 TTCS Condenser foil heater check procedure sheet

| | TTCS Condenser foil heater check procedure sheets | | company: ADC | | date: 2008/ 02/18 ~02/19 | |
|---|---|---|---|---|---|---|
| | Fill in by hand. | | engineer: | | location: | |
| Step | Action | Monitoring | Value | Result | Comment | √ |
| 1. | Record condenser model (P-ram, P-wake, S-ram, S-wake) | T.I. description | - | PR | | |
| 2. | Record model ( FM Primary Wake/ FM Primary RAM/ FM Secondary Wake/ FM Secondary RAM/) | model | - | FMS | | |
| 3. | **Visual inspection prior to thermal cycling** | | | | | |
| 4. | **Check if no bubbles are present below the heaters, take digital picture and write down time stamp**<br>**Name heater (e.g. HHCONWAKEP1a)** | | **Bubbles yes/no** | | **Write down Time stamp of the picture**<br>02/18 | |
| 5. | Name: HHCONRAMP1a | | Yes/no | NO | time: 10:43 AM<br>file: P2183079 ~ 084 | |
| 6. | Name: HHCONRAMP1b | | Yes/no | NO | | |
| 7. | Name: HHCONRAMP2a | | Yes/no | NO | time: 10:44 AM<br>file: 085 ~ 091 | |
| 8. | Name: HHCONRAMP2b | | Yes/no | NO | | |

| | TTCS Condenser foil heater check procedure sheets | | company: | | date: | |
|---|---|---|---|---|---|---|
| | Fill in by hand. | | engineer: | | location: | |
| Step | Action | Monitoring | Value | Result | Comment | √ |
| 9. | Name: HH CON RAMP 3a | | Yes/no | NO | time: 10:46 AM file: 092 ~ 096 | |
| 10. | Name: HH CON RAMP 3b | | Yes/no | NO | | |
| 11. | Name: HH CON RAMP 4a | | Yes/no | NO | time: 10:47 AM file: 097 ~ 114 | |
| 12. | Name: HH CON RAM P 4b | | Yes/no | NO | | |
| 13. | Name: HH CON RAMP 5a | | Yes/no | NO | time: 10:51 AM file: 115 ~ 119 | |
| 14. | Name: HH CON RAM P 5b | | Yes/no | NO | | |
| 15. | Name: HH CON RAM P 6a | | Yes/no | NO | time: 10:55 AM file: 120 ~ 125 | |
| 16. | Name: HH CON RAM P 6b | | Yes/no | NO | | |
| 17. | Name: HH CON RAM P 7a | | Yes/no | NO | time: 10:59 AM file: 134 ~ 138 | |
| 18. | Name: HH CON RAM P 7b | | Yes/no | NO | | |

HH CON RAM P 8a

time: 10:56 AM
file: 126 ~ 135

| | TTCS Condenser foil heater check procedure sheets | | company: | | date: | |
|---|---|---|---|---|---|---|
| | Fill in by hand. | | engineer: | | location: | |
| Step | Action | Monitoring | Value | Result | Comment | √ |
| 19. | Name: HHCONRAMP 8b | | Yes/no | NO | | |
| 20. | Name (liquid line health heater): HHLL1aPRAM_f | | Yes/no | No | time = 10:58 file = 133 | |
| 21. | Name (liquid line health heater): HHLL1bPRAM_f | | Yes/no | NO | | |
| 22. | **Store all digital pictures on hard disk (make sure in advance you are sure the time stamps or file names are as you documented in this table)** | | | | | |
| 23. | Record test equipment used (multi-meter) | manufacturer, type | Agilent | 34401A 6½ Digit | Multimeter | |
| 24. | Record power supplies | manufacturer, type | Agilent | 6653A 0-35V/0-15A | System DC Power Supply | |
| 25. | Record type temperature sensor to monitor the foil heater temperature | manufacturer, type | NATIONAL INSTRUMENTS | | NI CDA8-9172 | |
| 26. | Attach temperature sensors on top of three heaters sections as indicated in Figure 7-3. | | | ok | | |
| 27. | Connect the heaters according to the schematic in Figure 7-2 to the two power supplies. | | | ok | as the same as FM1 | |

FM3

| | TTCS Condenser foil heater check procedure sheets | | company: | | date: | |
|---|---|---|---|---|---|---|
| | Fill in by hand. | | engineer: | | location: | |
| Step | Action | Monitoring | Value | Result | Comment | √ |
| 28. | Put 20 V to heaters (be sure the power supply can handle 3.3 A current or more) | | | | we use 21 V | |
| 29. | Record time and temperatures of next 2 steps | **Time** | 2008.07.14 start: 08:37 | **Temperature** | | |
| 30. | Switch-off the heaters as soon as they reach 80 °C | Time cold1 | 09:09 | | | |
| | | Time hot1 | 09:19 | | | |
| | | Time cold2 | 09:36 | | | |
| | | Time hot2 | 09:48 | | | |
| | | Time cold3 | 10:07 | | | |
| | | Time hot3 | 10:23 | | | |
| | | Time cold4 | 10:48 | | | |
| | | Time hot4 | 11:03 | | | |
| | | Time cold5 | 11:24 | | | |
| | | Time hot5 | 11:37 | | | |
| | | Time cold6 | 11:55 | | | |
| | | Time hot6 | 12:06 | | | |
| | | Time cold7 | 12:26 | | | |
| | | Time hot7 | 12:39 | | | |
| | | Time cold8 | 12:58 | | | |

FM 3

| | **TTCS Condenser foil heater check procedure sheets** | | company: | | date: | |
|---|---|---|---|---|---|---|
| | Fill in by hand. | | engineer: | | location: | |
| Step | Action | Monitoring | Value | **Result** | Comment | √ |
| | | Time hot8<br>Time cold9<br>Time hot9<br>Time cold10<br>Time hot10<br>Time cold 11 | 13:10<br>13:33<br>13:46<br>14:04<br>14:17<br>14:38 | | | |
| 31. | Wait until the heaters reach 35 °C | | | ok | | |
| 32. | Repeat steps 28 to 31 nine (9) times | | | | | |
| 33. | Disconnect power supply | | | ok | | |
| 34. | Check the electrical resistance of the heater groups | | | | A: 6.478 Ω<br>B: 6.526 Ω Total: 3.327 Ω | |
| 35. | **Visual inspection after thermal cycling** | | | | | |
| 36. | **Check if no bubbles are present below the heaters, take digital picture and write down time stamp**<br>**<u>Name heater (e.g. HHCONWAKEP1a)</u>** | | **Bubbles yes/no** | All No | **Write down Time stamp of the picture** | |

| | TTCS Condenser foil heater check procedure sheets | | company: | | date: | |
|---|---|---|---|---|---|---|
| | Fill in by hand. | | engineer: | | location: | |
| Step | Action | Monitoring | Value | Result | Comment | √ |
| 37. | Name: HW CONRAMP 1a | | Yes/no | No | time: 2/19 16:59 file: P2193225 ~ 227 | |
| 38. | Name: 〃 1b | | Yes/no | 〃 | | |
| 39. | Name: 〃 2a | | Yes/no | 〃 | time: 17:00 file: 228 ~ 233 | |
| 40. | Name: 〃 2b | | Yes/no | 〃 | | |
| 41. | Name: 〃 3a | | Yes/no | 〃 | time: 17:03 file: 237 ~ 240 | |
| 42. | Name: 〃 3b | | Yes/no | 〃 | | |
| 43. | Name: 〃 4a | | Yes/no | 〃 | time: 17:05 file: 241 ~ 246 | |
| 44. | Name: 〃 4b | | Yes/no | 〃 | | |
| 45. | Name: 〃 5a | | Yes/no | 〃 | time: 17:06 file: 247 ~ 251 | |
| 46. | Name: 〃 5b | | Yes/no | 〃 | | |

| | TTCS Condenser foil heater check procedure sheets | | company: | | date: | |
|---|---|---|---|---|---|---|
| | Fill in by hand. | | engineer: | | location: | |
| Step | Action | Monitoring | Value | Result | Comment | √ |
| 47. | Name: HHCONRAMP 6a | | Yes/no | NO | time: 17:07 file: 255 ~ 256 | |
| 48. | Name: 6b | | Yes/no | : | | |
| 49. | Name: 7a | | Yes/no | : | time: 17:18 file: 266 ~ 267 | |
| 50. | Name: 7b | | Yes/no | : | | |
| 51. | Name: 8a 8b | | Yes/no | : | time: 17:07 file: 257 ~ 260 | |
| 52. | Name (liquid line health heater): HHLL1aPRAM_f | | Yes/no | : | time: 17:10 file: 261 ~ 265 | |
| 53. | Name (liquid line health heater): HHLL1bPRAM_f | | Yes/no | : | | |
| 54. | Electrical resistance check | | | | | |
| 55. | Check the electrical resistance of the heater group A (in the final series configuration) | Design value is 387,2Ohm | See comment | 401.44 Ω | Compare with the value of the filled sheets of AMSTR-NLR-043 "Condenser heater installation procedure" and | |

| | **TTCS Condenser foil heater check procedure sheets** | | company: | | date: | |
|---|---|---|---|---|---|---|
| | Fill in by hand. | | engineer: | | location: | |
| Step | Action | Monitoring | Value | **Result** | Comment | √ |
| | | | | | write the value here | |
| 56. | Check the electrical resistance of the heater group B (in the final series configuration) | | | See comment<br>397.54 Ω | Compare with the value of the filled sheets of AMSTR-NLR-043 "Condenser heater installation procedure and write the value here | |
| 57. | Check the electrical insulation resistance of the heater group | | >2MOhm | A - open<br>B - open | | |
| 58. | Check the resistance of LLHH A and record | resistance | 7.3 Ohm<br>+/- 10% | 7.864 Ω | | |
| 59. | Check the resistance of LLHH A and record | resistance | 7.3 Ohm<br>+/- 10% | 7.864 Ω | | |
| 60. | Check the electrical insulation resistance of LLHH A | | >2MOhm | open | | |
| 61. | Check the electrical insulation resistance of LLHH B | | >2MOhm | open | | |
| 62. | End Procedure | | | | | |

# 8 Appendix A: TTCS Condenser Heater identification

In the following tables are described the correspondence between the ID heater on TTCS loop are related to the heater P/N provided by the supplier:

| Location/ | Condenser | ID heater | P/N |
|---|---|---|---|
| | | | |
| **Inlet/outlet foil heater** | QM | HHLL1aPW_f | |
| | | HHLL1bPW_f | |
| | PW | HHLL1aPWAK_f | |
| | | HHLL1bPWAK_f | |
| | SR | HHLL1aSRAM_f | |
| | | HHLL1bSRAM_f | |
| | PR | HHLL1aPRAM_f | |
| | | HHLL1bPRAM_f | |
| | SW | HHLL1aSWAK_f | |
| | | HHLL1bSWAK_f | |
| | | | |
| **Condenser foil heater** | QM | HHCONWP7a | |
| | | HHCONWP7b | |
| | PW | HHCONWAKEP1a | |
| | | HHCONWAKEP1b | |
| | | HHCONWAKEP2a | |
| | | HHCONWAKEP2b | |
| | | HHCONWAKEP3a | |
| | | HHCONWAKEP3b | |
| | | HHCONWAKEP4a | |
| | | HHCONWAKEP5a | |
| | | HHCONWAKEP5b | |
| | | HHCONWAKEP6a | |
| | | HHCONWAKEP6b | |
| | | HHCONWAKEP7a | |
| | | HHCONWAKEP7b | |
| | | HHCONWAKEP8b | |
| | | HHCONWAKEP8a | |

| | |
|---|---|
| SR | HHCONRAMS1a |
| | HHCONRAMS1b |
| | HHCONRAMS2a |
| | HHCONRAMS2b |
| | HHCONRAMS3a |
| | HHCONRAMS3b |
| | HHCONRAMS4a |
| | HHCONRAMS5a |
| | HHCONRAMS5b |
| | HHCONRAMS6a |
| | HHCONRAMS6b |
| | HHCONRAMS7a |
| | HHCONRAMS7b |
| | HHCONRAMS8b |
| | HHCONRAMS8a |
| PR | HHCONRAMP1a |
| | HHCONRAMP1b |
| | HHCONRAMP2a |
| | HHCONRAMP2b |
| | HHCONRAMP3a |
| | HHCONRAMP3b |
| | HHCONRAMP4a |
| | HHCONRAMP5a |
| | HHCONRAMP5b |
| | HHCONRAMP6a |
| | HHCONRAMP6b |
| | HHCONRAMP7a |
| | HHCONRAMP7b |
| | HHCONRAMP8b |
| | HHCONRAMP8a |
| SW | HHCONWAKES1a |
| | HHCONWAKES1b |
| | HHCONWAKES2a |
| | HHCONWAKES2b |
| | HHCONWAKES3a |

| | | |
|---|---|---|
| | | **HHCONWAKES3b** |
| | | **HHCONWAKES4a** |
| | | **HHCONWAKES5a** |
| | | **HHCONWAKES5b** |
| | | **HHCONWAKES6a** |
| | | **HHCONWAKES6b** |
| | | **HHCONWAKES7a** |
| | | **HHCONWAKES7b** |
| | | **HHCONWAKES8b** |
| | | **HHCONWAKES8a** |
| | | |
| **Liquid line wire heater** | QM | HHLL1aPW_w<br>HHLL1bPW_w |
| | PW | HHLL**1aPWAK_w**<br>HHLL**1bPWAK_w** |
| | SR | HHLL**1aSRAM_w**<br>HHLL**1bSRAM_w** |
| | PR | HHLL**1aPRAM_w**<br>HHLL**1bPRAM_w** |
| | SW | HHLL**1aSWAK_w**<br>HHLL**1bSWAK_w** |
| | | |

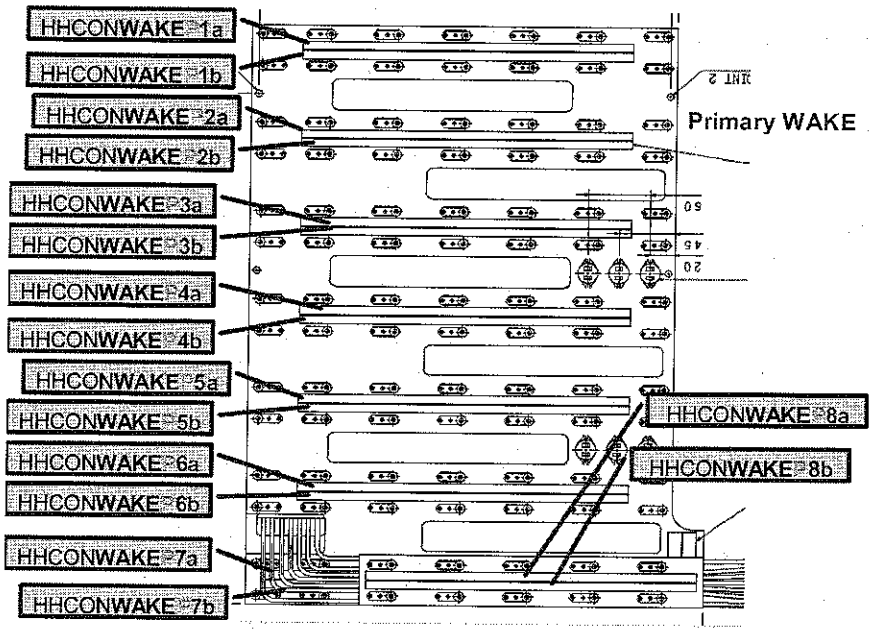
HHCONWAKE_1a
HHCONWAKE_1b
HHCONWAKE_2a
HHCONWAKE_2b
HHCONWAKE_3a
HHCONWAKE_3b
HHCONWAKE_4a
HHCONWAKE_4b
HHCONWAKE_5a
HHCONWAKE_5b
HHCONWAKE_6a
HHCONWAKE_6b
HHCONWAKE_7a
HHCONWAKE_7b
HHCONWAKE_8a
HHCONWAKE_8b
Primary WAKE

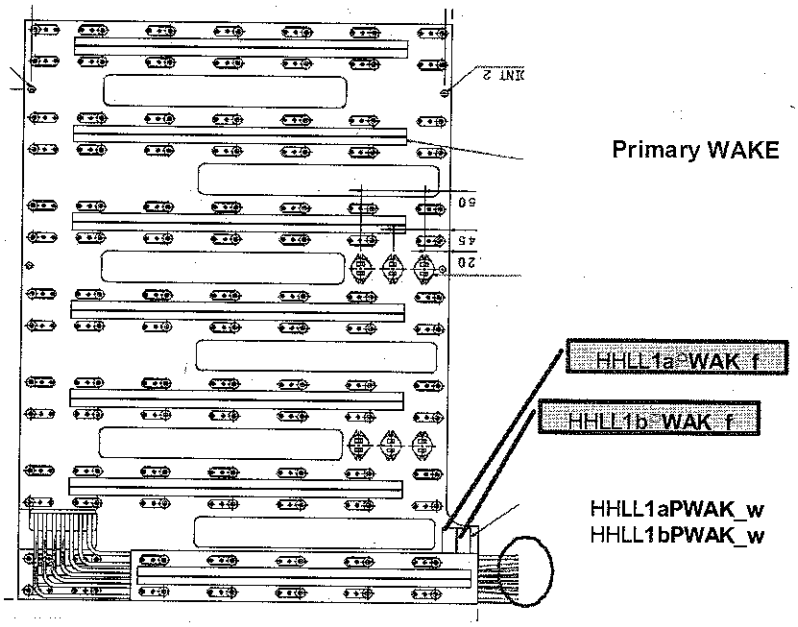
Primary WAKE
HHLL1a_WAK_f
HHLL1b_WAK_f
HHLL1aPWAK_w
HHLL1bPWAK_w

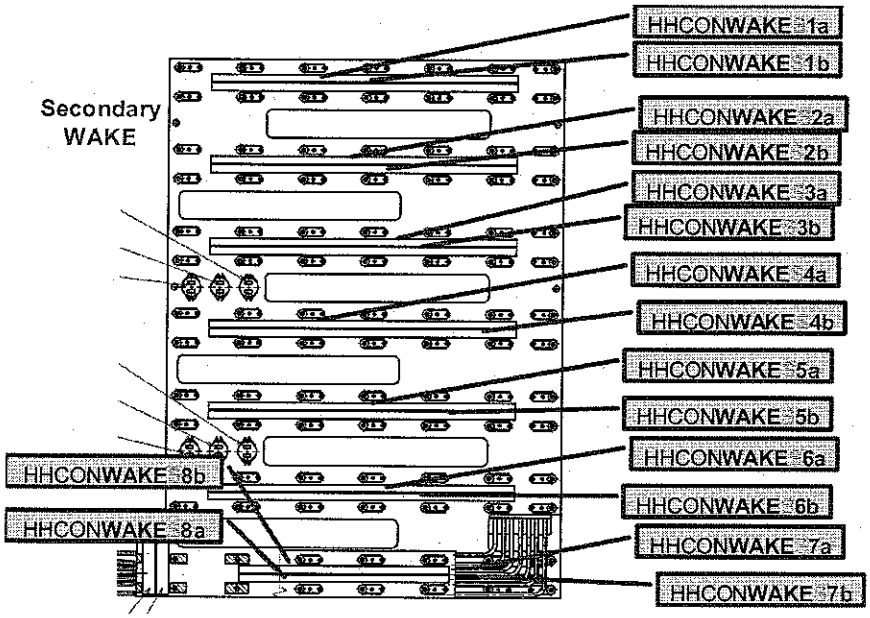
Secondary WAKE
HHCONWAKE 1a
HHCONWAKE 1b
HHCONWAKE 2a
HHCONWAKE 2b
HHCONWAKE 3a
HHCONWAKE 3b
HHCONWAKE 4a
HHCONWAKE 4b
HHCONWAKE 5a
HHCONWAKE 5b
HHCONWAKE 6a
HHCONWAKE 6b
HHCONWAKE 7a
HHCONWAKE 7b
HHCONWAKE 8b
HHCONWAKE 8a

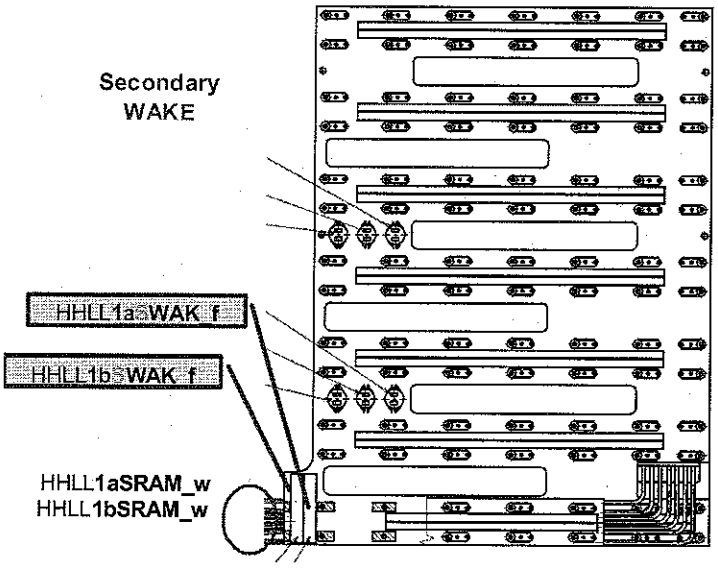
Secondary WAKE
HHLL1a WAK f
HHLL1b WAK f
HHLL1aSRAM_w
HHLL1bSRAM_w

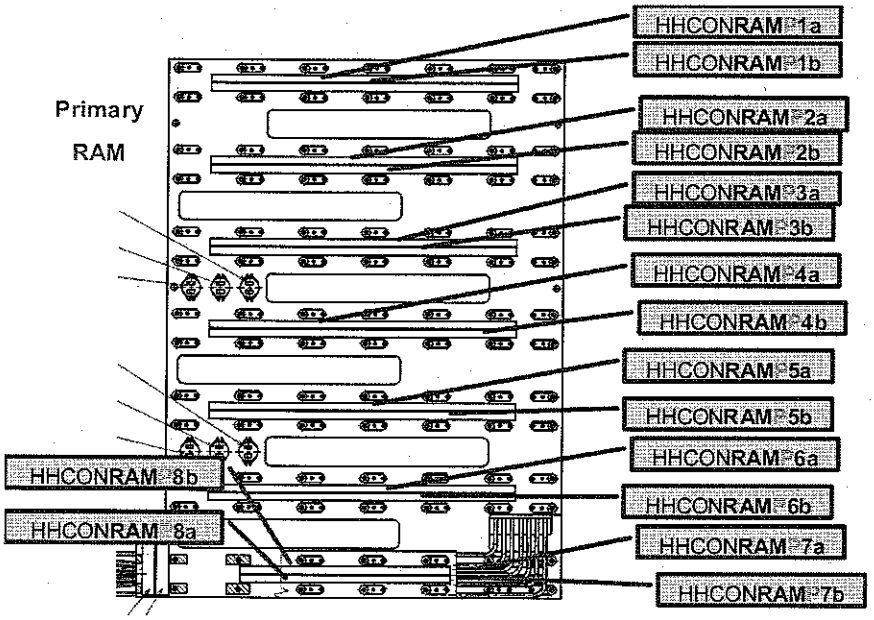
Primary
RAM
HHCONRAM 1a
HHCONRAM 1b
HHCONRAM 2a
HHCONRAM 2b
HHCONRAM 3a
HHCONRAM 3b
HHCONRAM 4a
HHCONRAM 4b
HHCONRAM 5a
HHCONRAM 5b
HHCONRAM 6a
HHCONRAM 6b
HHCONRAM 7a
HHCONRAM 7b
HHCONRAM 8b
HHCONRAM 8a

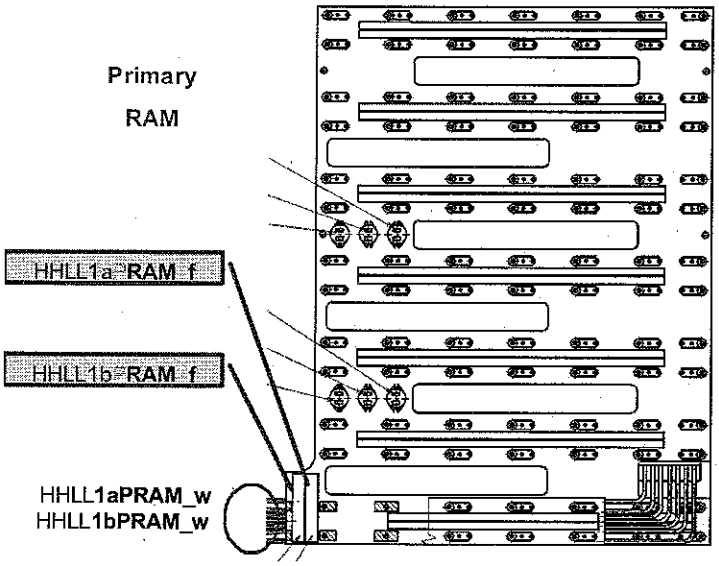
Primary
RAM
HHLL1a RAM f
HHLL1b RAM f
HHLL1aPRAM_w
HHLL1bPRAM_w

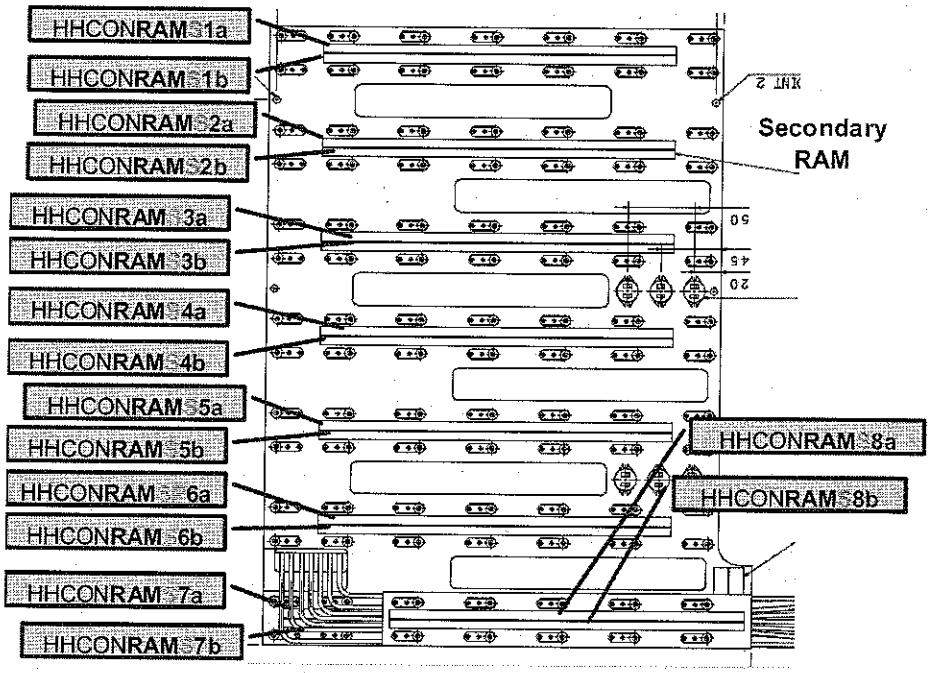
HHCONRAM_1a
HHCONRAM_1b
HHCONRAM_2a
HHCONRAM_2b
HHCONRAM_3a
HHCONRAM_3b
HHCONRAM_4a
HHCONRAM_4b
HHCONRAM_5a
HHCONRAM_5b
HHCONRAM_6a
HHCONRAM_6b
HHCONRAM_7a
HHCONRAM_7b
HHCONRAM_8a
HHCONRAM_8b
Secondary RAM

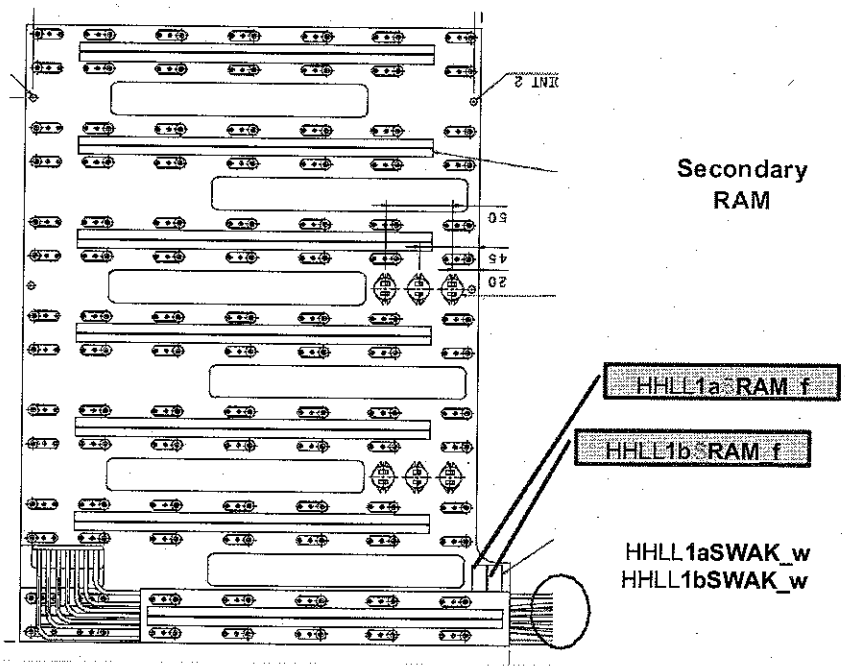
Secondary RAM
HHLL1a_RAM_f
HHLL1b_RAM_f
HHLL1aSWAK_w
HHLL1bSWAK_w

# 9 Appendix B: Foil heater positioning on top plate

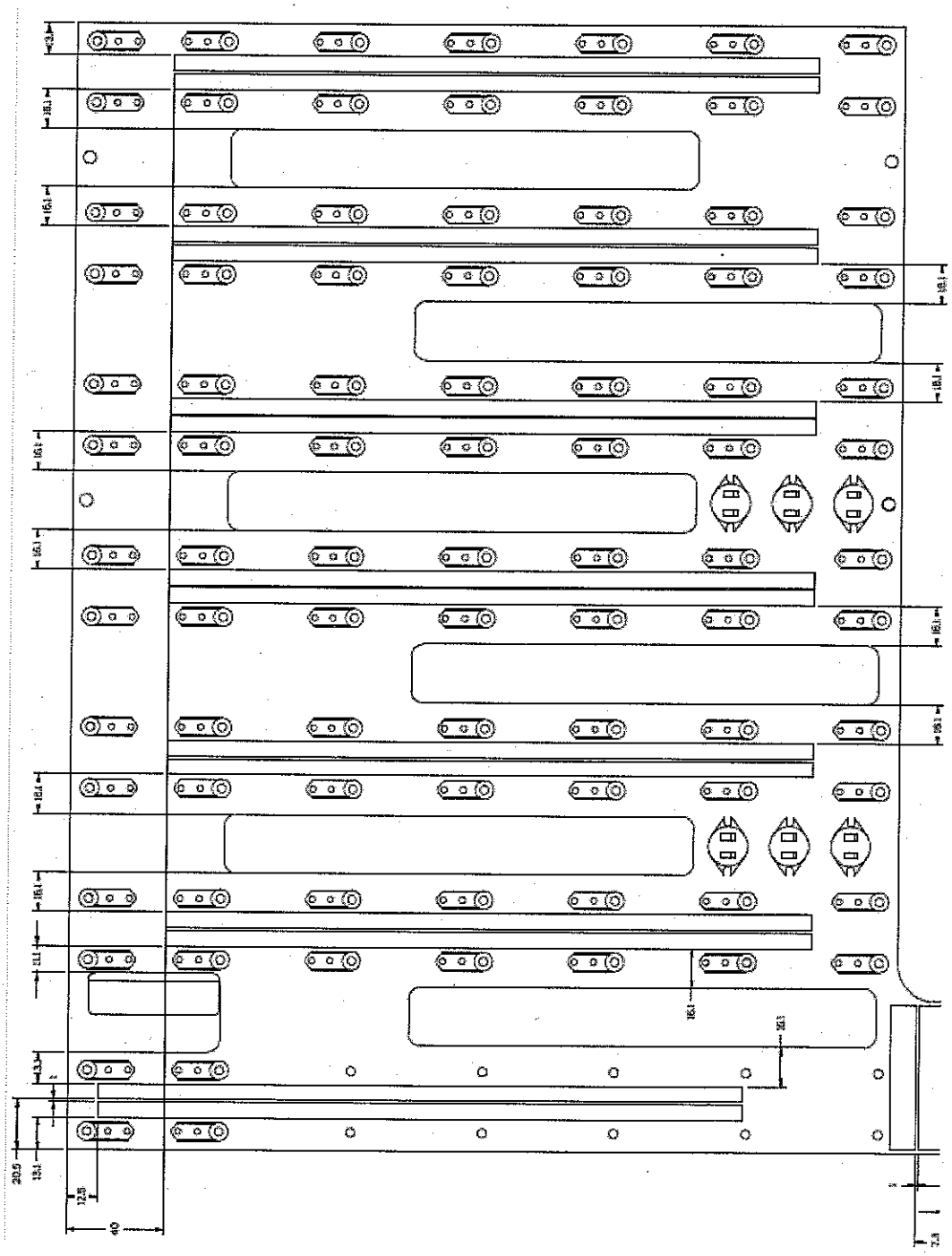

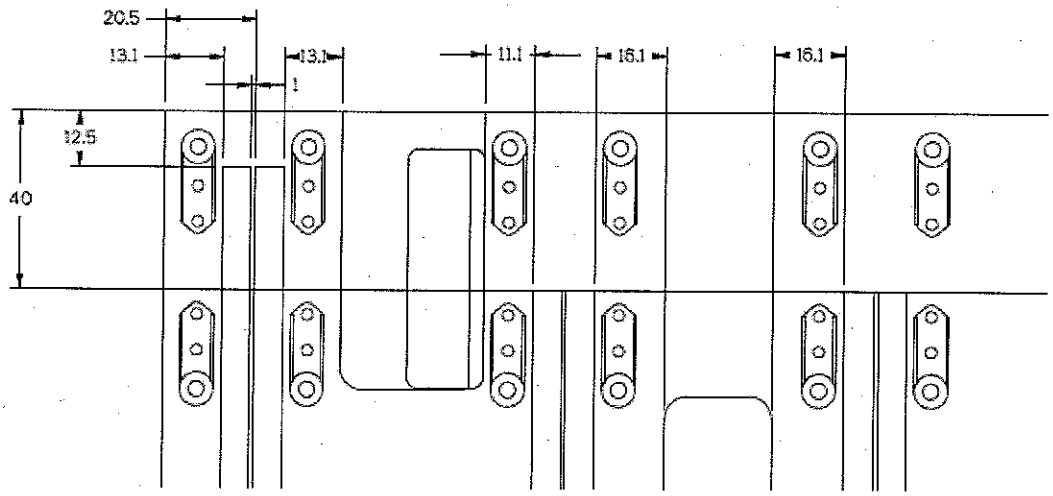
20.5
13.1
13.1
1
11.1
16.1
16.1
12.5
40

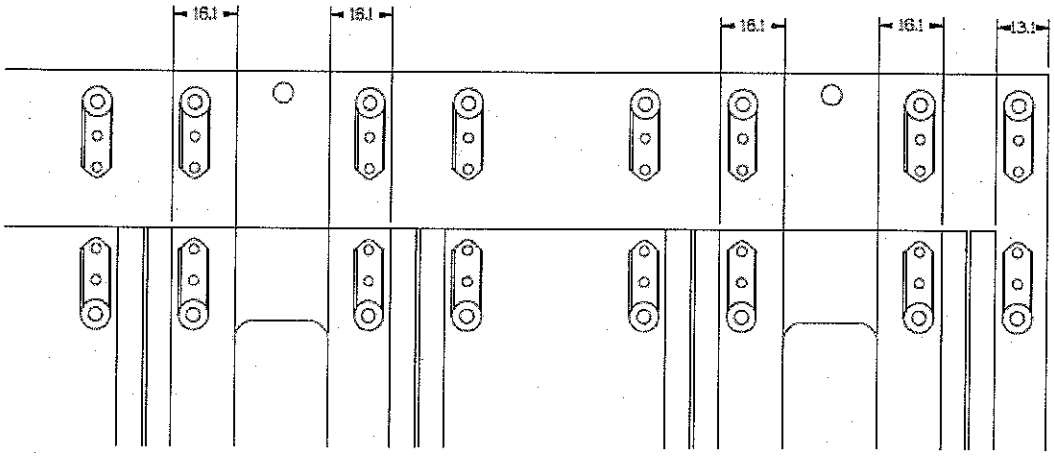
16.1
16.1
16.1
16.1
13.1

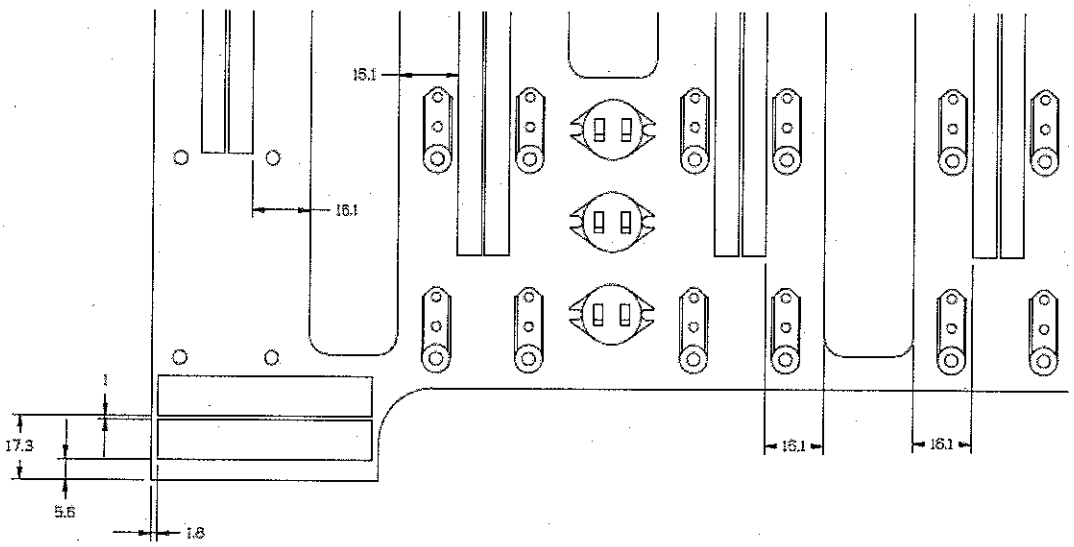
16.1
16.1
1
17.3
5.6
1.6
16.1
16.1

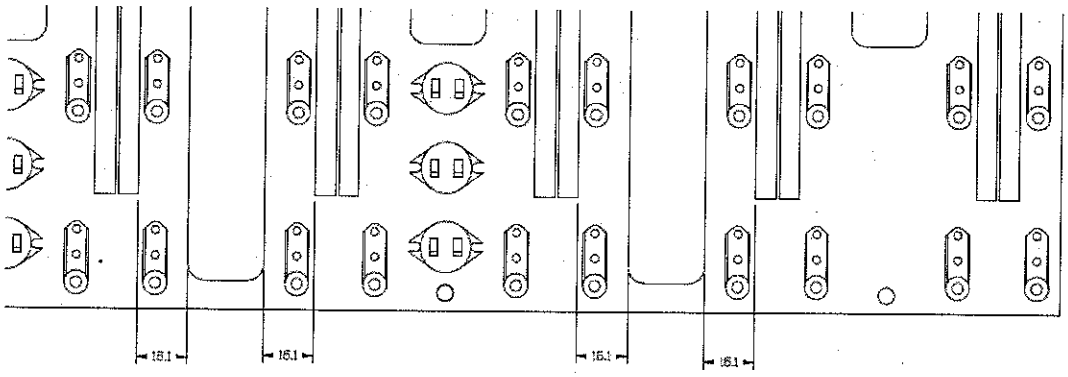


Foil heater positioning on top strain relief

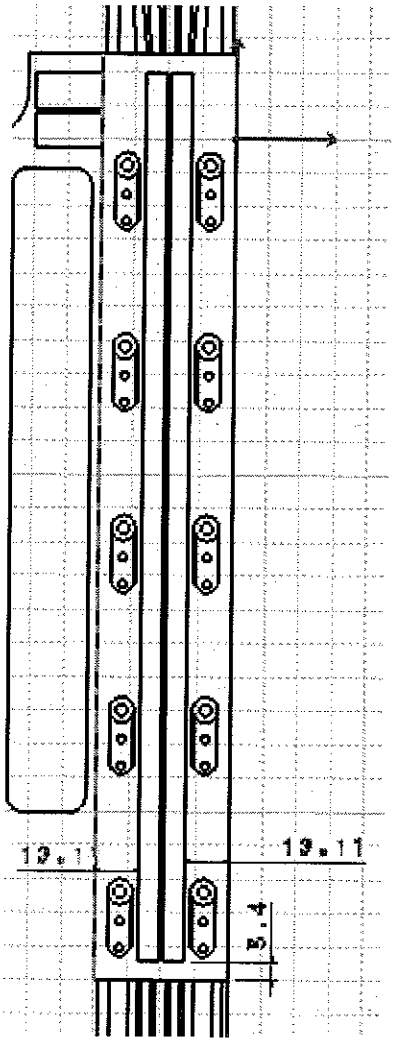

# END OF DOCUMENT