Nationaal Lucht- en Ruimtevaartlaboratorium

National Aerospace Laboratory NLR

AMS Tracker Thermal Control Subsystem

TTCS FM Condenser foil heater check procedure

AMSTR-NLR-PR-061
ISSUE 3.0
FEBRUARY 2009

Sun Yat-Sen University (SYSU)
National Aerospace Laboratory (NLR)
Instituto Nazionale di Fisica Nucelare (INFN)

	NAME	ORGANISATION/RESPONSIBILITY	SIGNATURE	DATE
PREPARED	J. van Es	NLR		
CHECKED	J. van Es	NLR / AMS TTCS System Eng.		
AGREED	A. Pauw	NLR / TTCS PA		
APPROVED	J. van Es	NLR / AMS TTCS PM		
AUTHORISED				

FILENAME	AMSTR-NLR-PR-XXX_Y.Y_Name_Test_Procedure_issXX.doc	ORDER-/CODENUMBER:	
LAST SAVED	2009.02.11 19:37 by jvanes	DIVISION:	
PRINTED	2009.02.11 19:47	DISTRIBUTION:	Unlimited
PAGES	31	CLASSIFICATION TITLE:	Unclassified

No part of this document may be reproduced and/or disclosed, in any form or by any means, without the prior written permission of NLR.

Distribution list

Company	*FOR**	*Name*	*Comments*
INFN	I	R. Battiston	
		M. Menichelli	
		C. Gargiulo	
		B. Alpat	
		A. Alvino	
		E. Laudi	
AMS	I	M. Capell	
		V. Koutsenko	
		R. Becker	
NLR	I	P. Dieleman	
		J.van Es	
		M. Bardet	
Jacobs Sverdrup	I	T. Martin	
		G. Clark	
AIDC	I	K.M. Sun/	
		B. Hsu	
		W. Min Hsu	
CGS	I	M. Molina C. Vettore	

```
A = Approval
R = Review
I = Input / Information
```

An electronic version of this document is available on the AMS TTCS website:

https://ams-ttcs.nlr.nl

No part of this document may be reproduced and/or disclosed, in any form or by any means, without the prior written permission of NLR.

Document change log

Change Ref.	*Section(s)*	*Issue 1.0*
-	All	Initial issue

No part of this document may be reproduced and/or disclosed, in any form or by any means, without the prior written permission of NLR.

Contents

Document change log 3

1 Scope of the document and test objective 5

2 Hardware under test 6

3 Test Requirements 7

4 Test facility description 7

5 Test Procedure in main steps 8

6 References documents 8

7 TTCS Condenser foil heater check procedure 9

7.1 TTCS Condenser foil heater check procedure sheets 9

7.2 Thermal cycle in ambient conditions 9

7.3 Electronics schematics during testing 9

7.4 Location of T-sensors during testing 12

7.5 TTCS Condenser foil heater check procedure sheet 13

8 Appendix A: TTCS Condenser Heater identification 21

9 Appendix B: Foil heater positioning on top plate 28

END OF DOCUMENT 31

(31 pages in total)

No part of this document may be reproduced and/or disclosed, in any form or by any means, without the prior written permission of NLR.

1 Scope of the document and test objective

The procedure in this document describes the TTCS FM Condenser foil heater tests. The objective of the test is to verify no bubbles are present below the glued foil heaters after thermal cycling.

The test is performed in the framework of the AMS02 foil heater bubble check after bubbles were detected on Tracker radiator heaters. The test follows the highlighted path of the AMS02 TCS heater check & recovery plan as shown below:

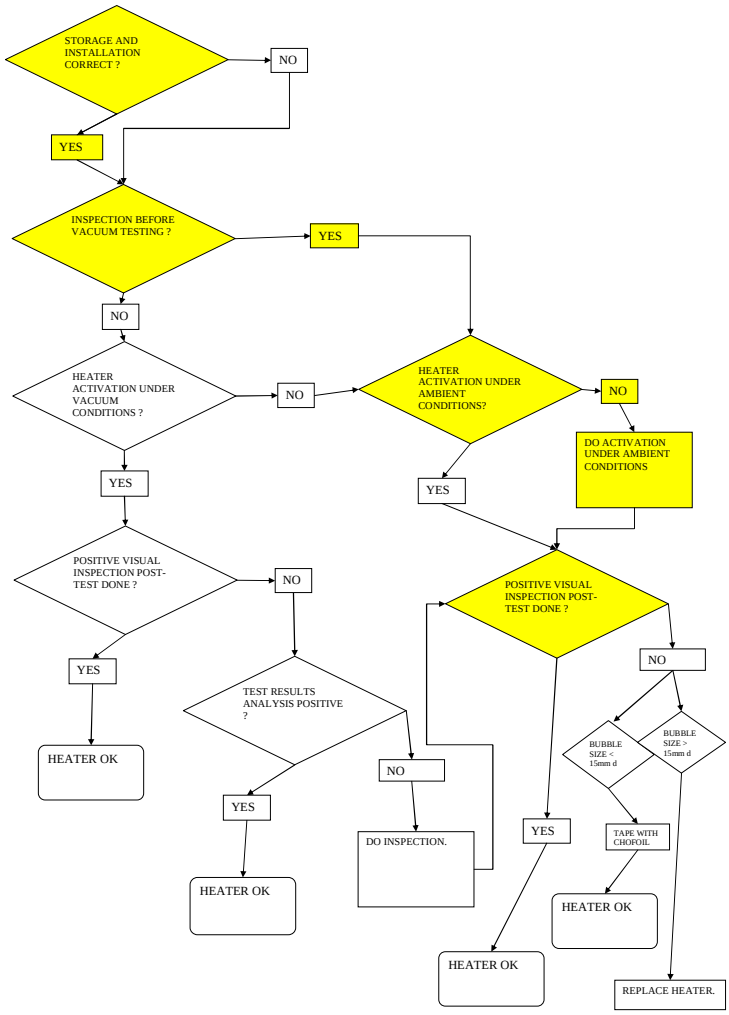

No part of this document may be reproduced and/or disclosed, in any form or by any means, without the prior written permission of NLR.

2 Hardware under test

The FM condensers are shown in Figure 2-1.

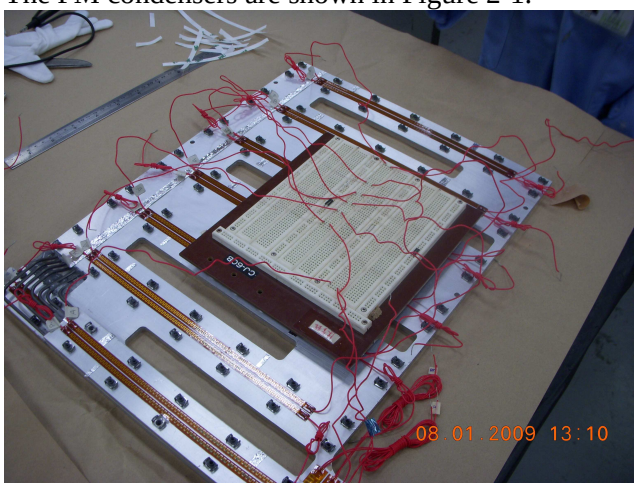

Figure 2-1: FM condenser (with on top a breadboard used as terminal block)

On the condenser 16 Minco Foil Heaters HK27565 with pressure sensitive adhesive 10 are located.

Also 2 liquid line health heaters (FHK 203 with Pressure sensitive adhesive 10) are located at the entrance/exit of the condenser tubes as shown below.

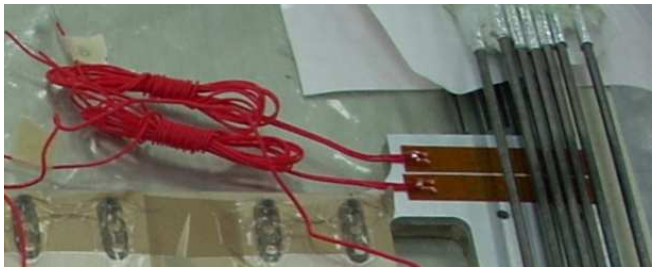

Figure 2-2: Detail of liquid line health heaters

No part of this document may be reproduced and/or disclosed, in any form or by any means, without the prior written permission of NLR.

3 Test Requirements

The test is successful when the following requirements are fulfilled.

- During visual inspection no bubbles are found after thermal cycling
- No >5% change in wire heater resistance is found
- Electrical insulation resistances >2MOhm

4 Test facility description

The test is performed at AIDC in Taichung the following facilities and equipment are used:

- Multi-meter
- 2 Power supplies 0-28 Volt, 0-5 A (nominal 3.5 A)
- A bare minimum of 4 Temperature sensor to measure the maximum temperatures of the heaters
- Electrical Breadboard used as terminal block for the electrical wires

No part of this document may be reproduced and/or disclosed, in any form or by any means, without the prior written permission of NLR.

5 Test Procedure in main steps

The main test procedure steps are:

1. Perform foil heater visual inspection
2. Thermal cycling in ambient conditions
3. Perform foil heater visual inspection
4. Check foil heater electrical and insulation resistance

6 References documents

<In case you refer to other procedures or documents please list them here>

	Title	Number	Date
RD-1	TTCS Requirements Verification Matrix FM H/W	AMSTR-NLR-PL-02 Issue 1.0	April 2007
RD-2	Condenser heaters installation procedure	AMSTR-NLR-PR-043 Issue 4	December 2008
RD-3	QM-FM Condenser gluing procedure	AMSTR-NLR-PR-038 Issue 6	December 2008

No part of this document may be reproduced and/or disclosed, in any form or by any means, without the prior written permission of NLR.

7 TTCS Condenser foil heater check procedure

7.1 TTCS Condenser foil heater check procedure sheets

The procedure sheets shall be filled in by hand, and shall accompany the FM condensers during it's lifetime in order to be able to show the procedure was followed.

7.2 Thermal cycle in ambient conditions

The thermal cycling of the heaters is schematically shown below.

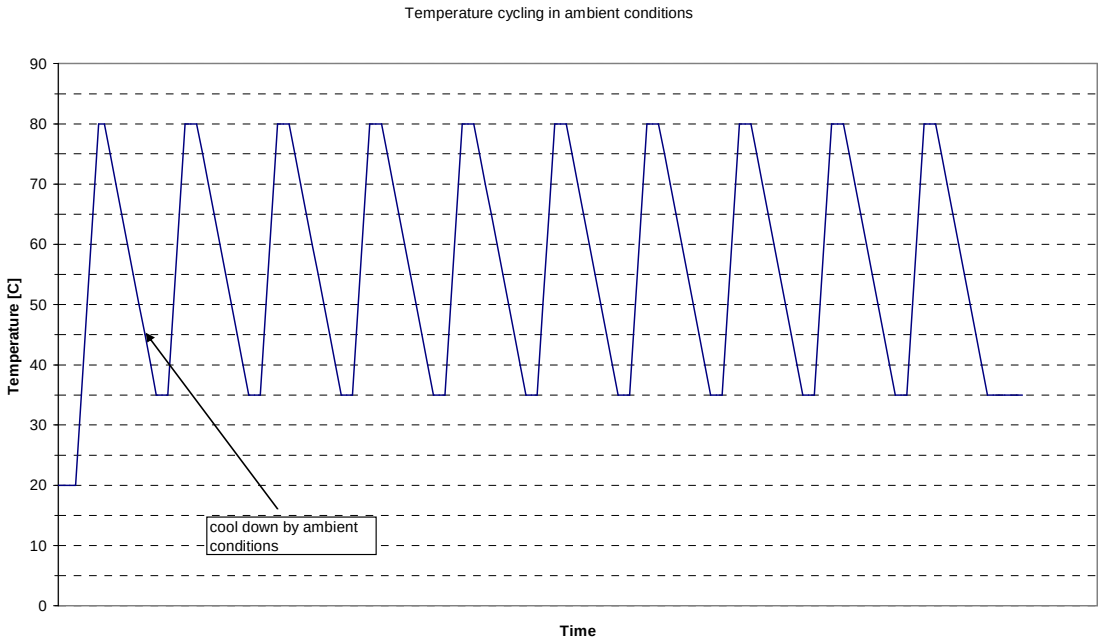

Figure 7-1: Temperature cycle

7.3 Electronics schematics during testing

The electronics schematics during testing differs from the flight schematics for 2 reasons:

1. Set-up to be compliant with 0-28 V power supplies
2. Cycle time reductions

The schematic is as follows:

No part of this document may be reproduced and/or disclosed, in any form or by any means, without the prior written permission of NLR.

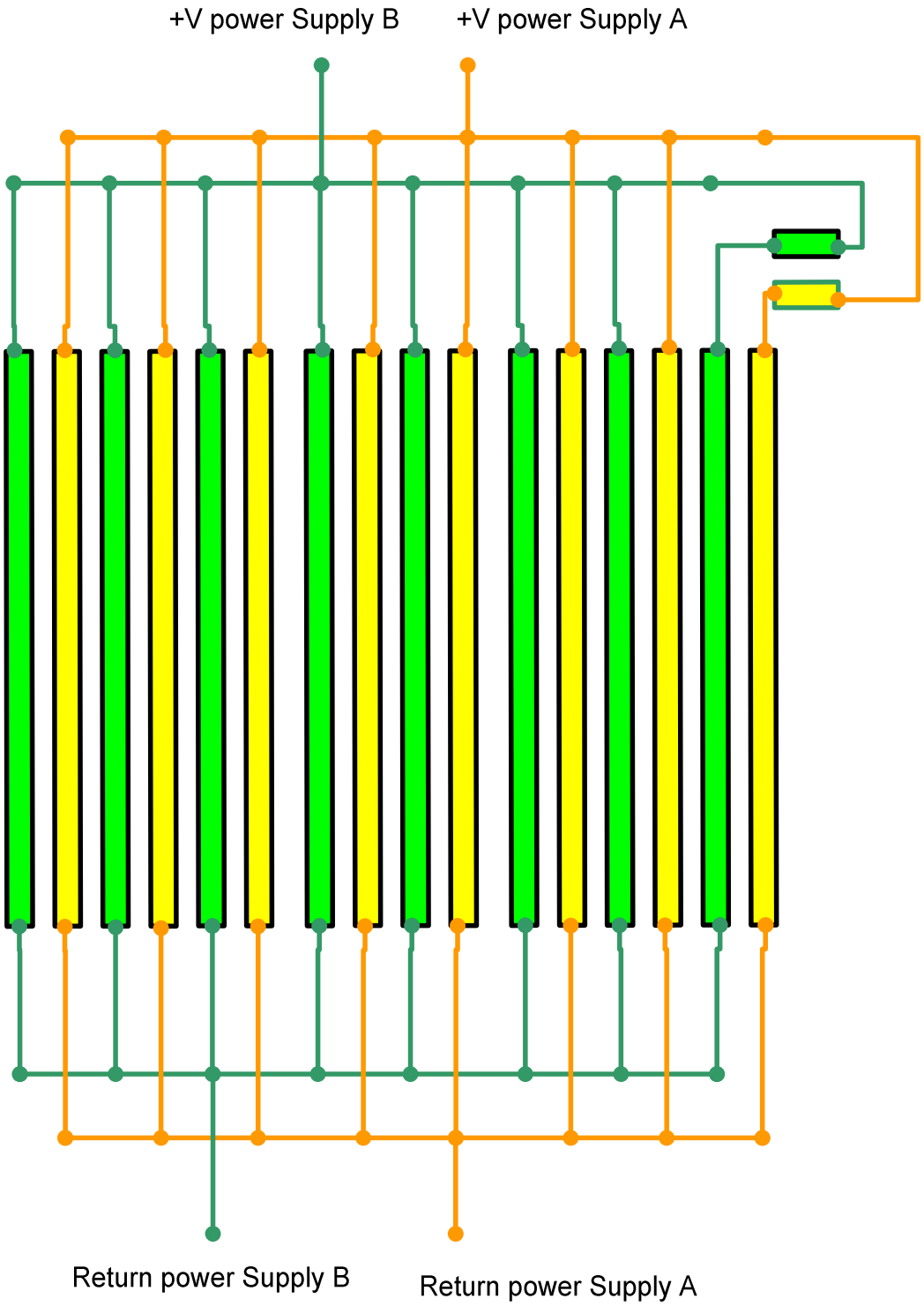

Figure 7-2: Heater schematic during condenser heater cycling (all A heaters in parallel & all B heaters in parallel)

No part of this document may be reproduced and/or disclosed, in any form or by any means, without the prior written permission of NLR.

To provide the heaters with enough power all the eight (8) A condenser heaters are in parallel (in orange). The liquid line health heater is connected in series with one of the eight branches. The B heaters are connected in the same way and connected to a separate power supply. With two (one A and one B) power supplies all heaters are switched on at the same time providing a total power of 130 Watts.

Based on a rough calculation the heat up cycle with the current set-up is approximately 25 minutes.

Heating up cycle ROM time estimate as function of power

CP [J/kgK]	DeltaT	Mass condenser [kg]	Required energy (J)	Power (W)	Time required [min]
880	45	4.5	178200	130.07	22.83

It is advised to insulate the top (heater sides) of the condenser to shorten the heat up time.
In Table 7-1 details on currents, powers and power densities can be found. The power densities are just above (0.49 W/cm^2) the flight requirements for foil heaters (max 0.465 W/cm^2). If needed a voltage of 19.5 V will bring the densities below this requirement.

Voltage [V]	20
R(condenser) [Ohm]	48.4
R(liqlinefoil) [Ohm]	7.3
Heater area HHCON heaters [cm^2]	16.9
Heater area HHLL heaters [cm^2]	6.25
8 parallel branches (7 x HHCONXXX heater, and one HHCON heater in series with one HHLL heater)	
R (Parallel circuit heaters) [Ohm]	6.15
I [A] total	3.25
P [Watt]	65.03
Voltage drop series branch [V]	20
Voltage drop 48.4 Ohm	17.38
Voltage drop 7.3 Ohm	2.62
P series branch [W]	7.18
I series branch [A]	0.36
P series 48.8 Ohm heater	6.24
P series 7.3 Ohm heater	0.94
P normal branch	8.26
P total check	65.03
Density normal branch heater [W/cm2]	0.49
Density series branch 48.4 Ohm heater [W/cm2]	0.37
Density series branch 7.3 Ohm heater [W/cm2]	0.15

Table 7-1: Power, currents and max power densities during thermal cycling

No part of this document may be reproduced and/or disclosed, in any form or by any means, without the prior written permission of NLR.

7.4 Location of T-sensors during testing

A minimum of 4 T-sensors is needed more T-sensors are allowed. In Figure 7-3 the temperature locations are indicated.

One T-sensor should be located on top of the heater on the strain relief as this location is attached to the smallest thermal mass and therefore the highest temperature is expected. This one on the inside A

A second T-sensor should be located on the liquid line health heater as this heater has the lowest power density and it is good to know the maximum temperature of this heater. Put this one on the heater attached in a branch B.

A third one should be located on a central heater A as there also high temperatures are expected. A fourth one on the same location but on heater B.

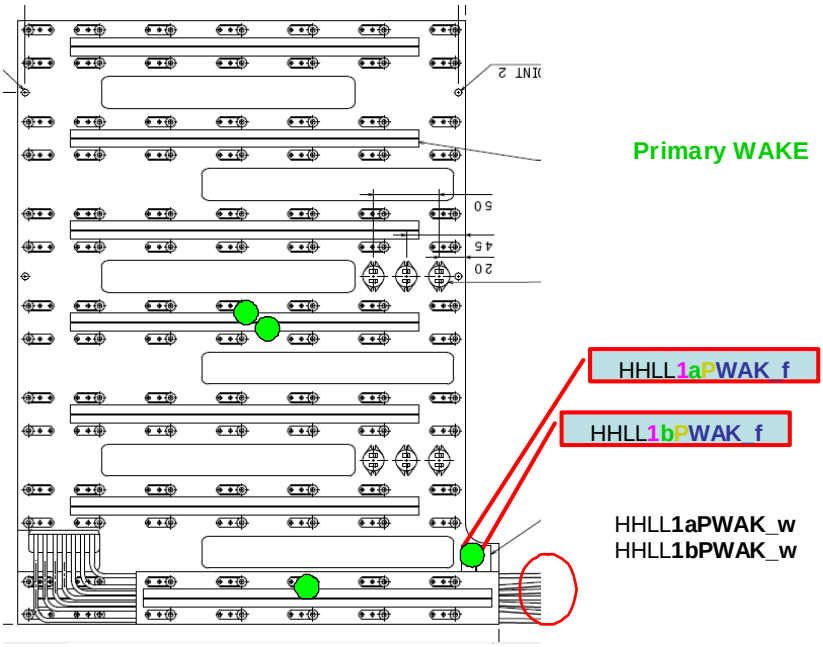

Figure 7-3: Locations of T-sensors

All maximum and minimum T's of the sensors during the 10 cycles should be documented or logged.

No part of this document may be reproduced and/or disclosed, in any form or by any means, without the prior written permission of NLR.

7.5 TTCS Condenser foil heater check procedure sheet

	TTCS Condenser foil heater check procedure sheets		company:		date:	
	Fill in by hand.		engineer:		location:	
Step	Action	Monitoring	Value	**Result**	Comment	√
1.	Record condenser model (P-ram, P-wake, S-ram, S-wake)	T.I. description	-			
2.	Record model (FM Primary Wake/ FM Primary RAM/ FM Secondary Wake/ FM Secondary RAM/)	model	-			
3.	**Visual inspection prior to thermal cycling**					
4.	**Check if no bubbles are present below the heaters, take digital picture and write down time stamp** **<u>Name heater (e.g. HHCONWAKEP1a)</u>**		**Bubbles yes/no**		**Write down Time stamp of the picture**	
5.	Name:		Yes/no			
6.	Name:		Yes/no			
7.	Name:		Yes/no			
8.	Name:		Yes/no			

	TTCS Condenser foil heater check procedure sheets		company:		date:	
	Fill in by hand.		engineer:		location:	
Step	Action	Monitoring	Value	**Result**	Comment	√
9.	Name:		Yes/no			
10.	Name:		Yes/no			
11.	Name:		Yes/no			
12.	Name:		Yes/no			
13.	Name:		Yes/no			
14.	Name:		Yes/no			
15.	Name:		Yes/no			
16.	Name:		Yes/no			
17.	Name:		Yes/no			
18.	Name:		Yes/no			

	TTCS Condenser foil heater check procedure sheets		company:		date:	
	Fill in by hand.		engineer:		location:	
Step	Action	Monitoring	Value	**Result**	Comment	√
19.	Name:		Yes/no			
20.	Name (liquid line health heater):		Yes/no			
21.	Name (liquid line health heater):		Yes/no			
22.	**Store all digital pictures on hard disk (make sure in advance you are sure the time stamps or file names are as you documented in this table)**					
23.	Record test equipment used (multi-meter)	manufacturer, type				
24.	Record power supplies	manufacturer, type				
25.	Record type temperature sensor to monitor the foil heater temperature	manufacturer, type				
26.	Attach temperature sensors on top of three heaters sections as indicated in Figure 7-3.					
27.	Connect the heaters according to the schematic in Figure 7-2 to the two power supplies.					

	TTCS Condenser foil heater check procedure sheets		company:		date:	
	Fill in by hand.		engineer:		location:	
Step	Action	Monitoring	Value	**Result**	Comment	√
28.	Put 20 V to heaters (be sure the power supply can handle 3.3 A current or more)					
29.	Record time and temperatures of next 2 steps	**Time**		**Temperature**		
30.	Switch-off the heaters as soon as they reach 80 ºC	Time cold1 Time hot1 Time cold2 Time hot2 Time cold3 Time hot3 Time cold4 Time hot4 Time cold5 Time hot5 Time cold6 Time hot6 Time cold7 Time hot7 Time cold8				

	TTCS Condenser foil heater check procedure sheets		company:		date:	
	Fill in by hand.		engineer:		location:	
Step	Action	Monitoring	Value	**Result**	Comment	√
		Time hot8 Time cold9 Time hot9 Time cold10 Time hot10 Time cold 11				
31.	Wait until the heaters reach 35 ºC					
32.	Repeat steps 28 to 31 nine (9) times					
33.	Disconnect power supply					
34.	Check the electrical resistance of the heater groups					
35.	**Visual inspection after thermal cycling**					
36.	**Check if no bubbles are present below the heaters, take digital picture and write down time stamp** **<u>Name heater (e.g. HHCONWAKEP1a)</u>**		**Bubbles yes/no**		**Write down Time stamp of the picture**	

	TTCS Condenser foil heater check procedure sheets		company:		date:	
	Fill in by hand.		engineer:		location:	
Step	Action	Monitoring	Value	**Result**	Comment	√
37.	Name:		Yes/no			
38.	Name:		Yes/no			
39.	Name:		Yes/no			
40.	Name:		Yes/no			
41.	Name:		Yes/no			
42.	Name:		Yes/no			
43.	Name:		Yes/no			
44.	Name:		Yes/no			
45.	Name:		Yes/no			
46.	Name:		Yes/no			

	TTCS Condenser foil heater check procedure sheets		company:		date:	
	Fill in by hand.		engineer:		location:	
Step	Action	Monitoring	Value	**Result**	Comment	√
47.	Name:		Yes/no			
48.	Name:		Yes/no			
49.	Name:		Yes/no			
50.	Name:		Yes/no			
51.	Name:		Yes/no			
52.	Name (liquid line health heater):		Yes/no			
53.	Name (liquid line health heater):		Yes/no			
54.	Electrical resistance check					
55.	Check the electrical resistance of the heater group A (in the final series configuration)	Design value is 387,2Ohm	See comment		Compare with the value of the filled sheets of AMSTR-NLR-043 “Condenser heater installation procedure” and	

	TTCS Condenser foil heater check procedure sheets		company:		date:	
	Fill in by hand.		engineer:		location:	
Step	Action	Monitoring	Value	**Result**	Comment	√
					write the value here	
56.	Check the electrical resistance of the heater group B (in the final series configuration)			See comment	Compare with the value of the filled sheets of AMSTR-NLR-043 "Condenser heater installation procedure and write the value here	
57.	Check the electrical insulation resistance of the heater group		>2MOhm			
58.	Check the resistance of LLHH A and record	resistance	7.3 Ohm +/- 10%			
59.	Check the resistance of LLHH A and record	resistance	7.3 Ohm +/- 10%			
60.	Check the electrical insulation resistance of LLHH A		>2MOhm			
61.	Check the electrical insulation resistance of LLHH B		>2MOhm			
62.	End Procedure					

8 Appendix A: TTCS Condenser Heater identification

In the following tables are described the correspondence between the ID heater on TTCS loop are related to the heater P/N provided by the supplier:

Location/	Condenser	ID heater	P/N
Inlet/outlet foil heater	QM	HHLL1aPW_f HHLL1bPW_f	
	PW	HHLL**1aPWAK_f** HHLL**1bPWAK_f**	
	SR	HHLL**1aSRAM_f** HHLL**1bSRAM_f**	
	PR	HHLL**1aPRAM_f** HHLL**1bPRAM_f**	
	SW	HHLL**1aSWAK_f** HHLL**1bSWAK_f**	
Condenser foil heater	QM	HHCON**WP7a**	
		HHCON**WP7b**	
	PW	HHCON**WAKEP1a**	
		HHCON**WAKEP1b**	
		HHCONWAKEP2a	
		HHCONWAKEP2b	
		HHCONWAKEP3a	
		HHCONWAKEP3b	
		HHCONWAKEP4a	
		HHCONWAKEP5a	
		HHCONWAKEP5b	
		HHCONWAKEP6a	
		HHCONWAKEP6b	
		HHCONWAKEP7a	
		HHCONWAKEP7b	
		HHCONWAKEP8b	
		HHCONWAKEP8a	

SR	HHCON**RAMS1a**
	HHCON**RAMS1b**
	HHCONRAMS2a
	HHCONRAMS2b
	HHCONRAMS3a
	HHCONRAMS3b
	HHCONRAMS4a
	HHCONRAMS5a
	HHCONRAMS5b
	HHCONRAMS6a
	HHCONRAMS6b
	HHCONRAMS7a
	HHCONRAMS7b
	HHCONRAMS8b
	HHCONRAMS8a
PR	HHCON**RAMP1a**
	HHCON**RAMP1b**
	HHCONRAMP2a
	HHCONRAMP2b
	HHCONRAMP3a
	HHCONRAMP3b
	HHCONRAMP4a
	HHCONRAMP5a
	HHCONRAMP5b
	HHCONRAMP6a
	HHCONRAMP6b
	HHCONRAMP7a
	HHCONRAMP7b
	HHCONRAMP8b
	HHCONRAMP8a
SW	HHCON**WAKES1a**
	HHCON**WAKES1b**
	HHCONWAKES2a
	HHCONWAKES2b
	HHCONWAKES3a

		HHCONWAKES3b
		HHCONWAKES4a
		HHCONWAKES5a
		HHCONWAKES5b
		HHCONWAKES6a
		HHCONWAKES6b
		HHCONWAKES7a
		HHCONWAKES7b
		HHCONWAKES8b
		HHCONWAKES8a
Liquid line wire heater	QM	HHLL1aPW_w HHLL1bPW_w
	PW	HHLL**1aPWAK_w** HHLL**1bPWAK_w**
	SR	HHLL**1aSRAM_w** HHLL**1bSRAM_w**
	PR	HHLL**1aPRAM_w** HHLL**1bPRAM_w**
	SW	HHLL**1aSWAK_w** HHLL**1bSWAK_w**

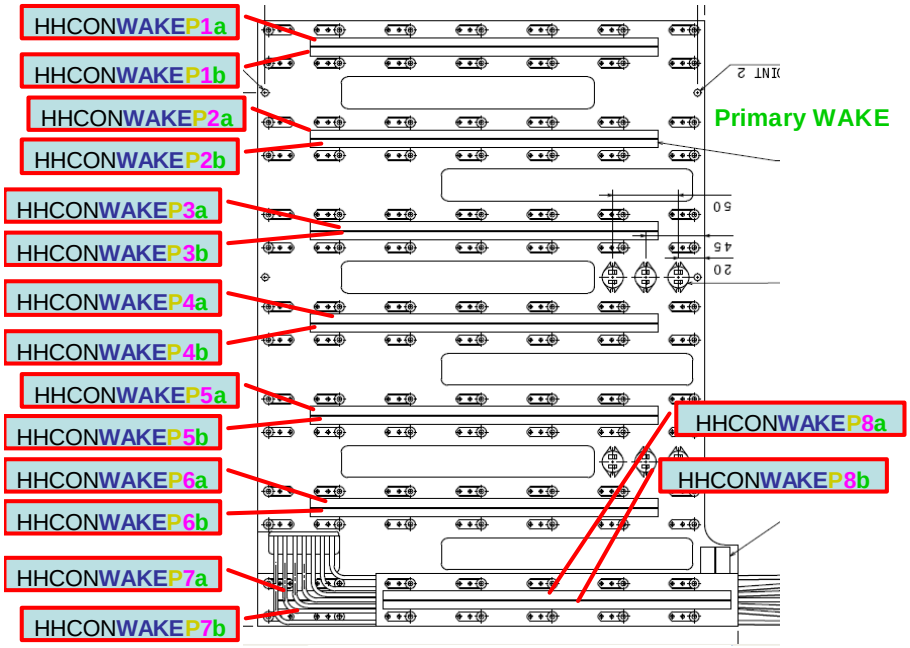
HHCONWAKEP1a
HHCONWAKEP1b
HHCONWAKEP2a
HHCONWAKEP2b
HHCONWAKEP3a
HHCONWAKEP3b
HHCONWAKEP4a
HHCONWAKEP4b
HHCONWAKEP5a
HHCONWAKEP5b
HHCONWAKEP6a
HHCONWAKEP6b
HHCONWAKEP7a
HHCONWAKEP7b
HHCONWAKEP8a
HHCONWAKEP8b
Primary WAKE

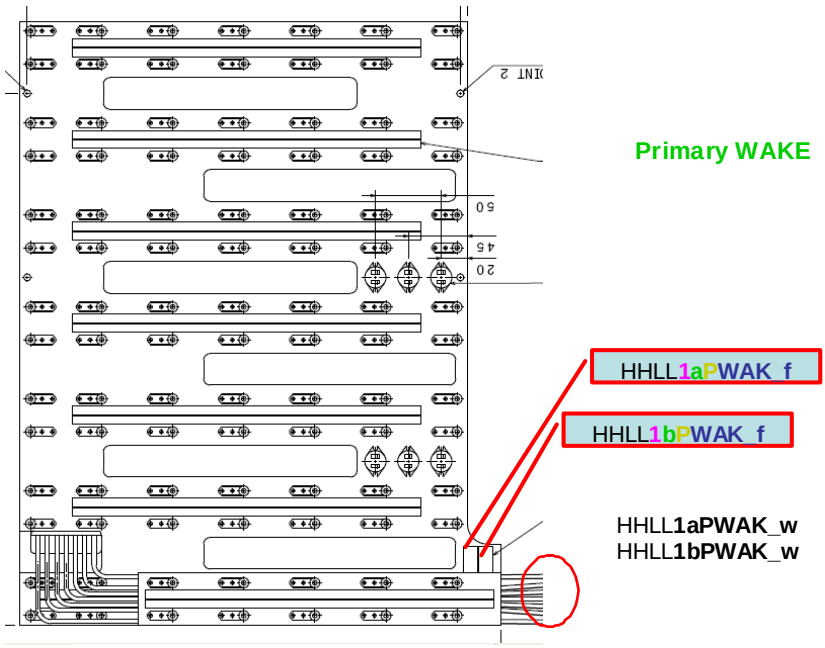
Primary WAKE
HHLL1aPWAK_f
HHLL1bPWAK_f
HHLL1aPWAK_w
HHLL1bPWAK_w

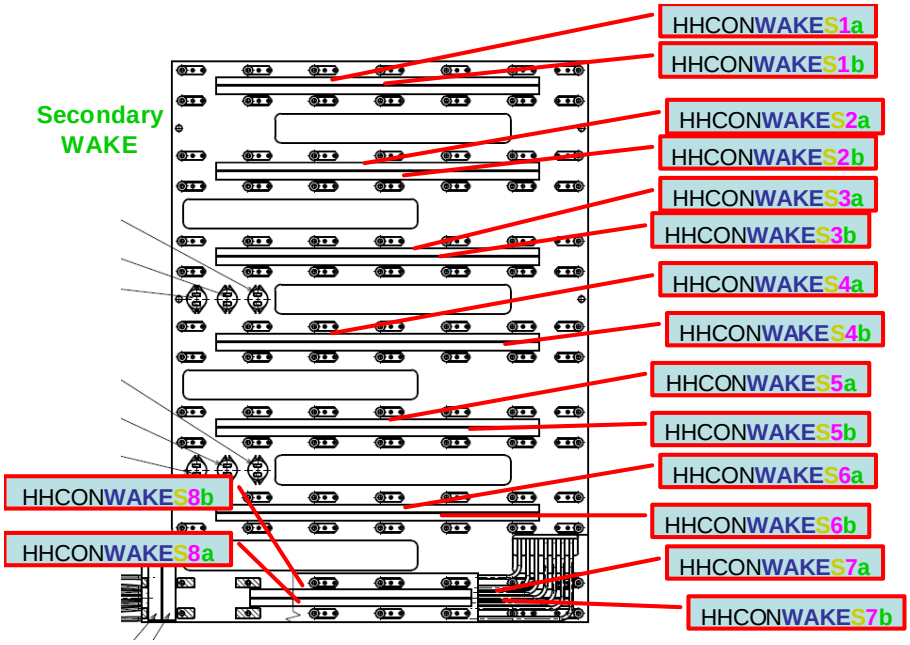
Secondary WAKE
HHCONWAKES1a
HHCONWAKES1b
HHCONWAKES2a
HHCONWAKES2b
HHCONWAKES3a
HHCONWAKES3b
HHCONWAKES4a
HHCONWAKES4b
HHCONWAKES5a
HHCONWAKES5b
HHCONWAKES6a
HHCONWAKES6b
HHCONWAKES7a
HHCONWAKES7b
HHCONWAKES8b
HHCONWAKES8a

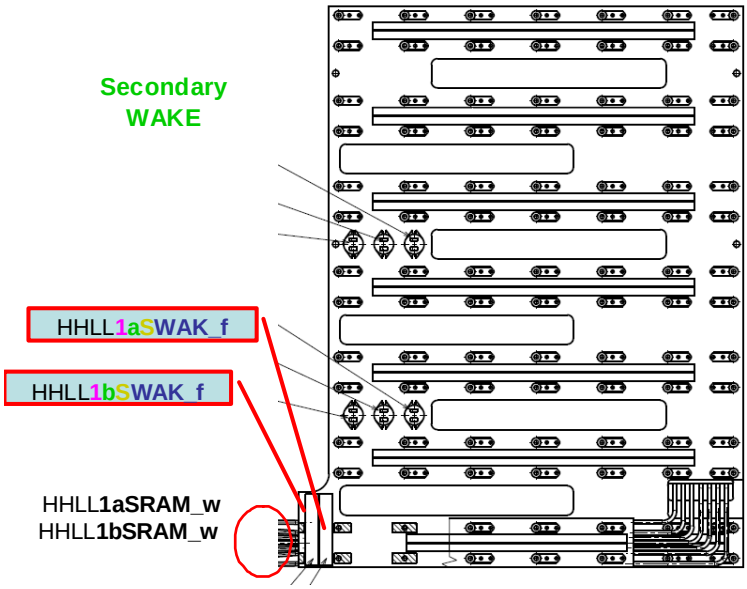
Secondary WAKE
HHLL1aSWAK_f
HHLL1bSWAK_f
HHLL1aSRAM_w
HHLL1bSRAM_w

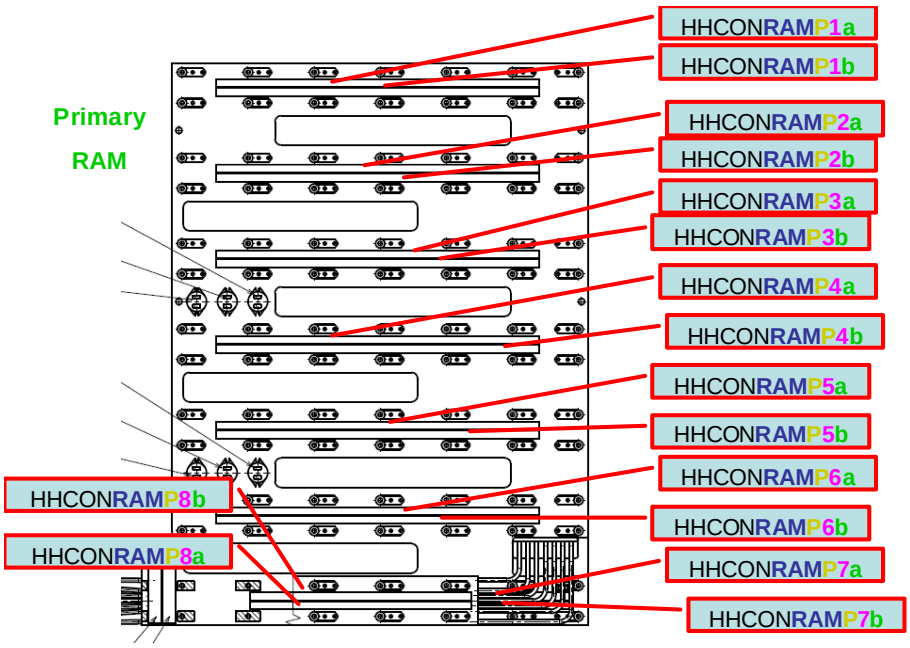
Primary
RAM
HHCONRAMP1a
HHCONRAMP1b
HHCONRAMP2a
HHCONRAMP2b
HHCONRAMP3a
HHCONRAMP3b
HHCONRAMP4a
HHCONRAMP4b
HHCONRAMP5a
HHCONRAMP5b
HHCONRAMP6a
HHCONRAMP6b
HHCONRAMP7a
HHCONRAMP7b
HHCONRAMP8b
HHCONRAMP8a

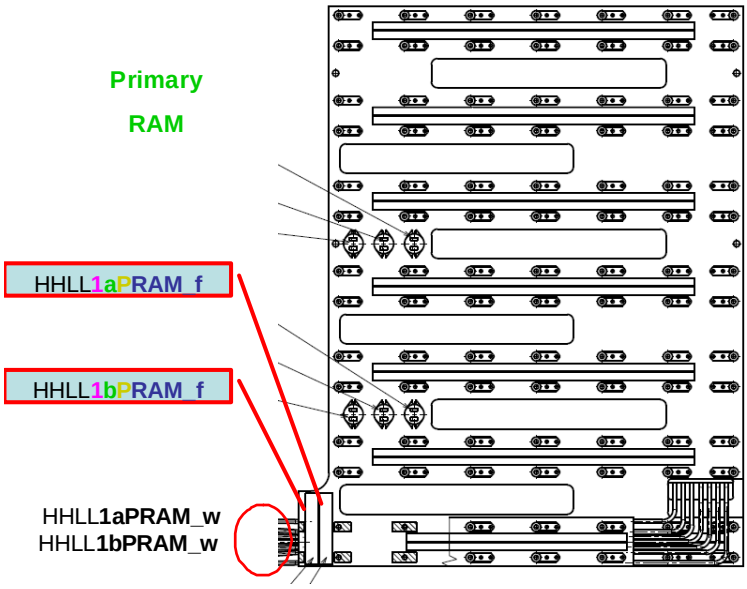
Primary
RAM
HHLL1aPRAM_f
HHLL1bPRAM_f
HHLL1aPRAM_w
HHLL1bPRAM_w

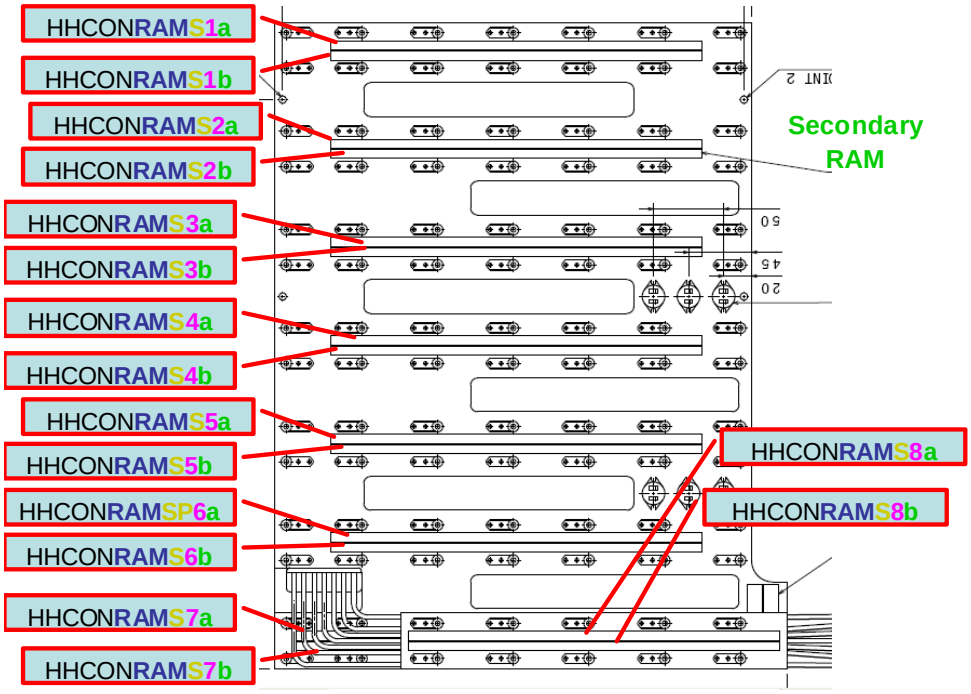
HHCONRAMS1a
HHCONRAMS1b
HHCONRAMS2a
HHCONRAMS2b
HHCONRAMS3a
HHCONRAMS3b
HHCONRAMS4a
HHCONRAMS4b
HHCONRAMS5a
HHCONRAMS5b
HHCONRAMSP6a
HHCONRAMS6b
HHCONRAMS7a
HHCONRAMS7b
HHCONRAMS8a
HHCONRAMS8b
Secondary RAM

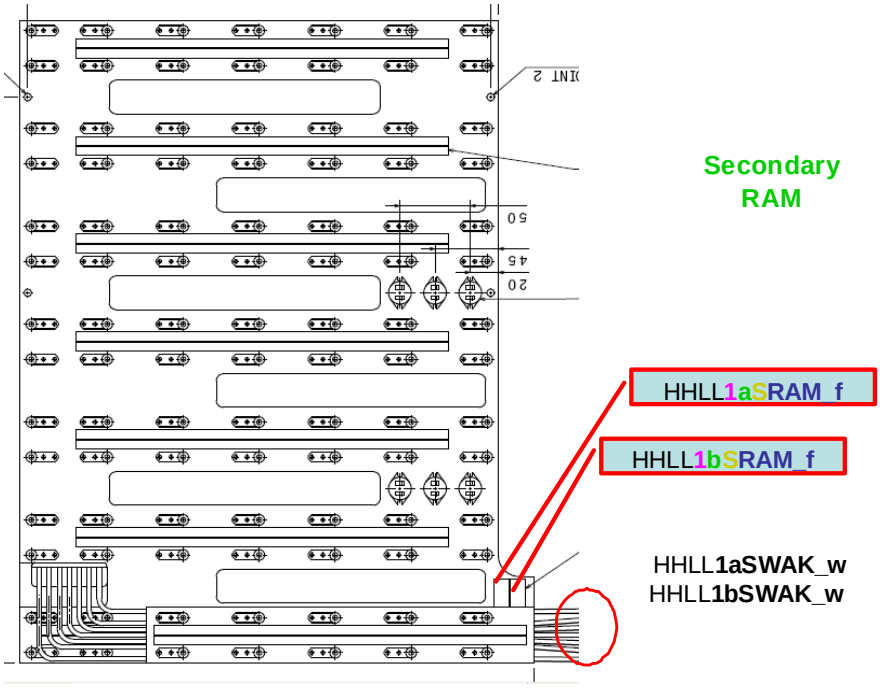
Secondary RAM
HHLL1aSRAM_f
HHLL1bSRAM_f
HHLL1aSWAK_w
HHLL1bSWAK_w

9 Appendix B: Foil heater positioning on top plate

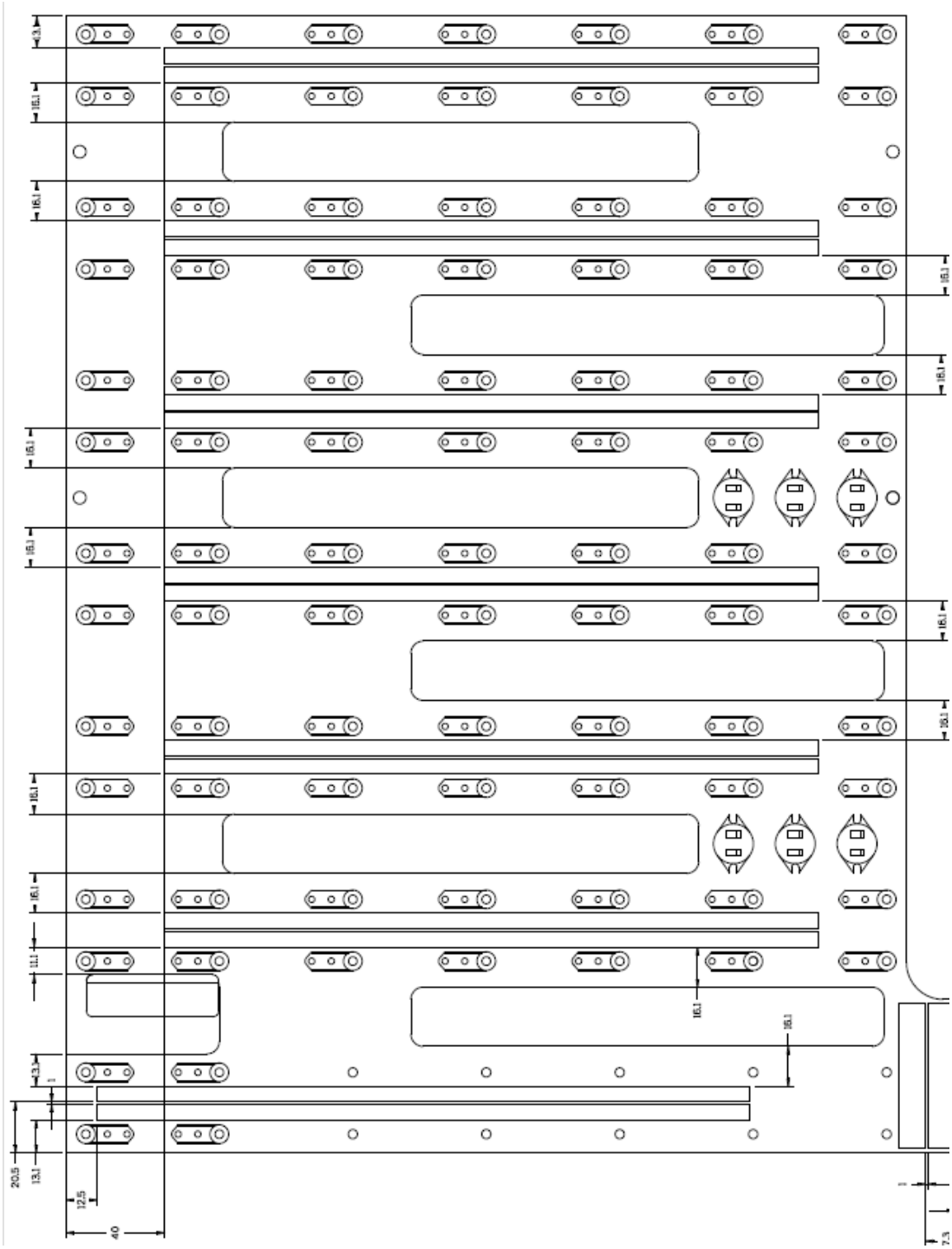

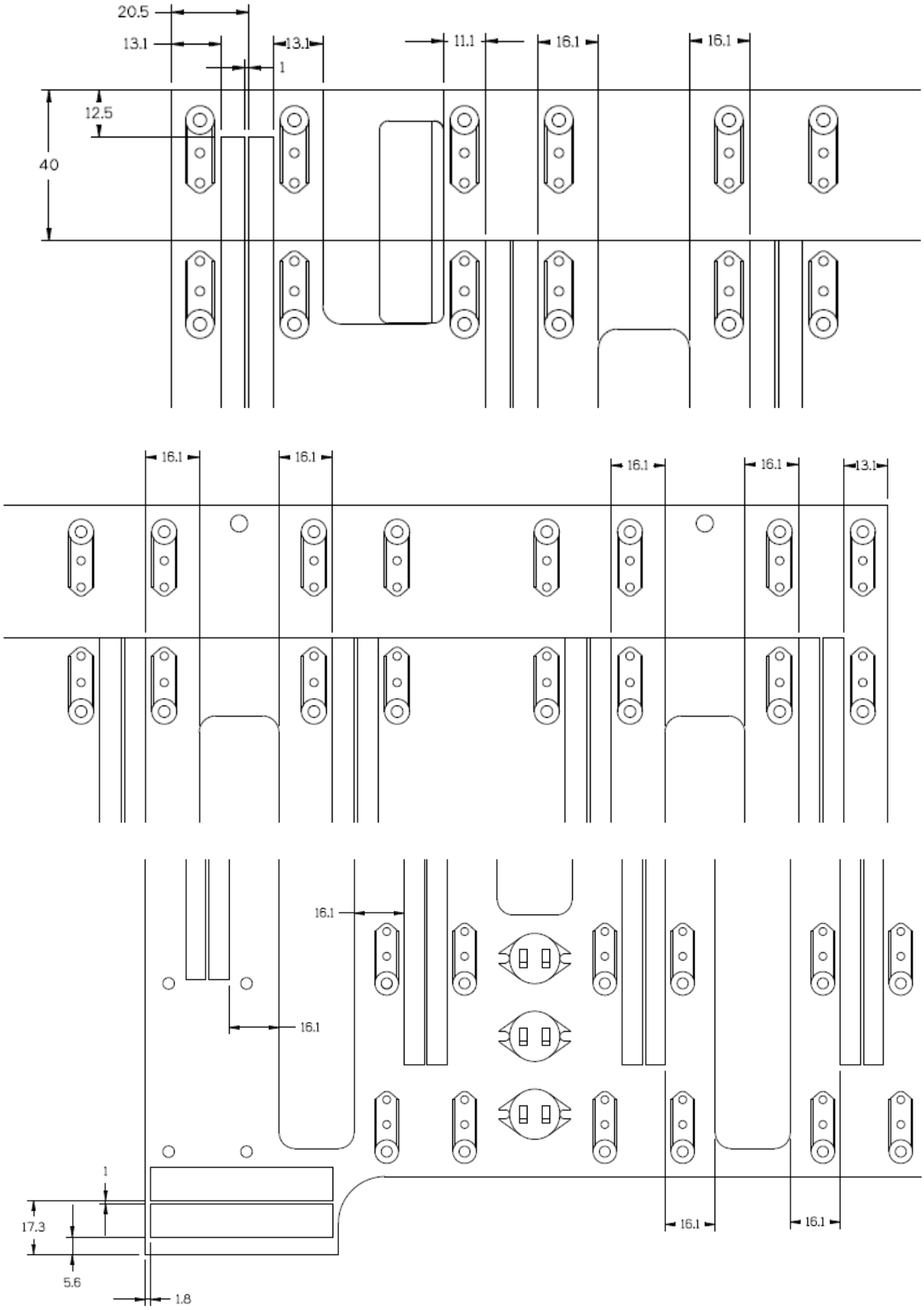
20.5
13.1
13.1
1
11.1
16.1
16.1
12.5
40
16.1
16.1
16.1
16.1
13.1
16.1
16.1
1
17.3
5.6
1.8
16.1
16.1

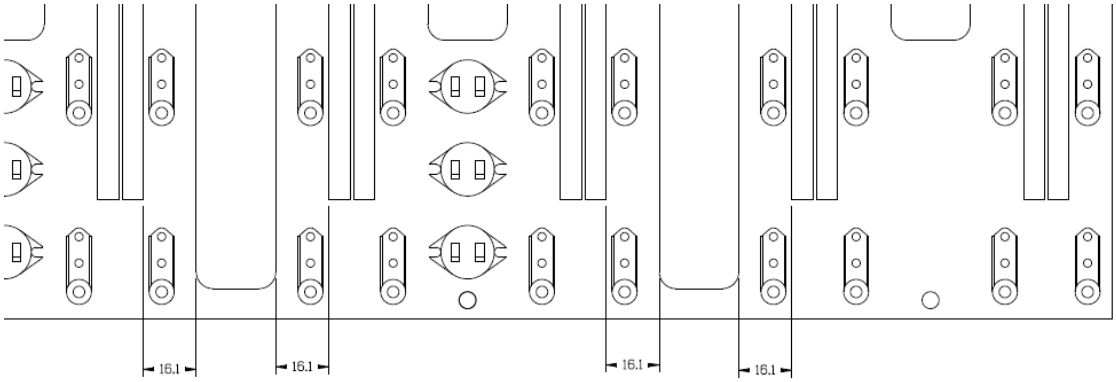

Foil heater positioning on top strain relief

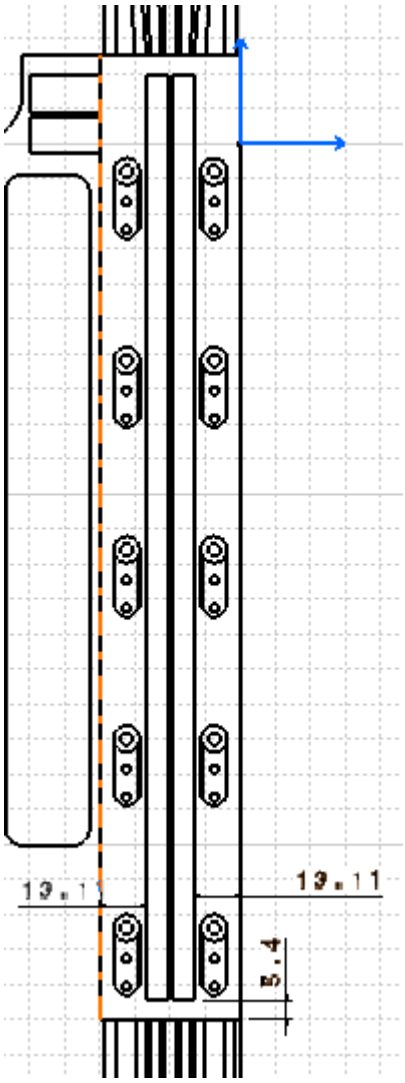

END OF DOCUMENT