Nationaal Lucht- en Ruimtevaartlaboratorium

National Aerospace Laboratory NLR

Aerospace Industrial Development Corporation

AMS Tracker Thermal Control Subsystem

TTCB FM Vibration test procedure

Secondary.

AMSTR-NLR-PR-030
ISSUE 3.0
MAY 14 2009

Sun Yat-Sen University (SYSU)
National Aerospace Laboratory (NLR)
Instituto Nazionale di Fisica Nucelare (INFN)

	NAME	ORGANISATION/RESPONSIBILITY	SIGNATURE	DATE
PREPARED	J. van Es/A. Alvino	NLR/INFN		14/05/09
CHECKED	J. van Es	NLR / AMS TTCS System Eng.		14/5/09
AGREED	A. Pauw	NLR / AMS Company PA		15/5/09
APPROVED	J. van Es	NLR / AMS TTCS PM		14/05/09
AUTHORISED				

FILENAME	AMSTR-NLR-PR-30_3_0_TTCB_FM_Vibration_test_procedure.doc	ORDER-/CODENUMBER:	
LAST SAVED	2009.05.14 18:20 by jvanes	DIVISION:	
PRINTED	2009.05.14 18:23	DISTRIBUTION:	Unlimited
PAGES	34	CLASSIFICATION TITLE:	Unclassified

No part of this document may be reproduced and/or disclosed, in any form or by any means, without the prior written permission of NLR.

Distribution list

Company	*FOR**	*Name*	*Comments*
INFN	I	R. Battiston	
		M. Menichelli	
		C. Gargiulo	
		B. Alpat	
		A. Alvino	
		E. Laudi	
AMS	I	M. Capell	
		V. Koutsenko	
		R. Becker	
NLR	I	P. Dieleman	
		J.van Es	
		M. Bardet	
Jacobs Sverdrup	I	T. Martin	
		G. Clark	
AIDC	I	K.M. Sun/	
		B. Hsu	
		W. Min Hsu	
CGS	I	M. Molina C. Vettore	

A = Approval
R = Review
I = Input / Information

An electronic version of this document is available on the AMS TTCS website:
https://ams-ttcs.nlr.nl

No part of this document may be reproduced and/or disclosed, in any form or by any means, without the prior written permission of NLR.

Document change log

Change Ref.	*Section(s)*	*Issue 1.0*
-	All	Initial issue

Change Ref.	*Section(s)*	*Issue 2.0*
	4.1	Modified location and name of the accelerometer
	5.0	Step 3-4-5 and 10-11-12 deleted: test is performed in Teri and not in Rome
	5.0	Modified test sequence for TTCBP & TTCBS
	7.1	Related steps to ENEA facility deleted
	7.2	Related steps to ENEA facility deleted
	7.3	Related steps to ENEA facility deleted

Change Ref.	*Section(s)*	*Issue 3.0*
	4.1	Modified location on pump and changed to a 3-axis type

No part of this document may be reproduced and/or disclosed, in any form or by any means, without the prior written permission of NLR.

Contents

Document change log 3

1 Scope of the document and test objective 5

2 Hardware under test 5

3 Test Requirements and success criteria 7

4 Test facility description and measurement equipment 7
4.1 Location of accelerometers 8

5 Test Procedure in main steps 11

6 References documents 12

7 TTCB Vibration overall test procedure 13
7.1 TTCB vibration pre-test procedure sheets 14
7.2 TTCB vibration test sheets 17
7.3 TTCB vibration post-test procedure sheets 26

Appendix A: Vibration profiles and levels 28

Appendix B: Temperature fill table during vibration test 30

Appendix C: I/F plate mechanical lay-out instructions 32

Error! Objects cannot be created from editing field codes. 32

Error! Objects cannot be created from editing field codes. 33

Error! Objects cannot be created from editing field codes. 33

END OF DOCUMENT 34

(34 pages in total)

No part of this document may be reproduced and/or disclosed, in any form or by any means, without the prior written permission of NLR.

1 Scope of the document and test objective

This document contains the vibration test procedure for the TTCB-P FM and the TTCB-S FM. The objective of the test is to demonstrate the TTCB's can withstand Minimum Workmanship Level Vibrations. Before and after the test functional checks are performed to compare the system health prior and after tests.

2 Hardware under test

The hardware subjected to the vibration test are the TTCB-P FM , TTCB-S FM. Both models are flight hardware. A TTCB consists of completely integrated unit with the following components: 1 pump electronics box connected by an electrical cable to 2 pumps, accumulator, HX, 2 x APS, 2 x DPS, several heaters, Pt1000's and Dallas DS18s20 temperature sensors, and integrated TTCB start-up radiators.
The items are shown in Figure 2-1 to Figure 2-3.

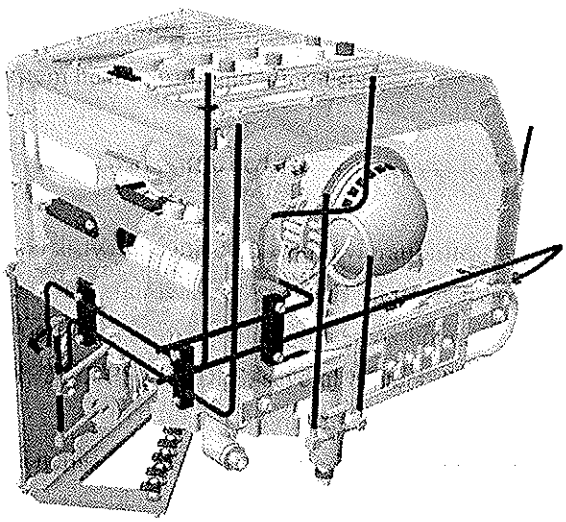

Figure 2-1: TTCB-Primary Box (3D-Model)

No part of this document may be reproduced and/or disclosed, in any form or by any means, without the prior written permission of NLR.

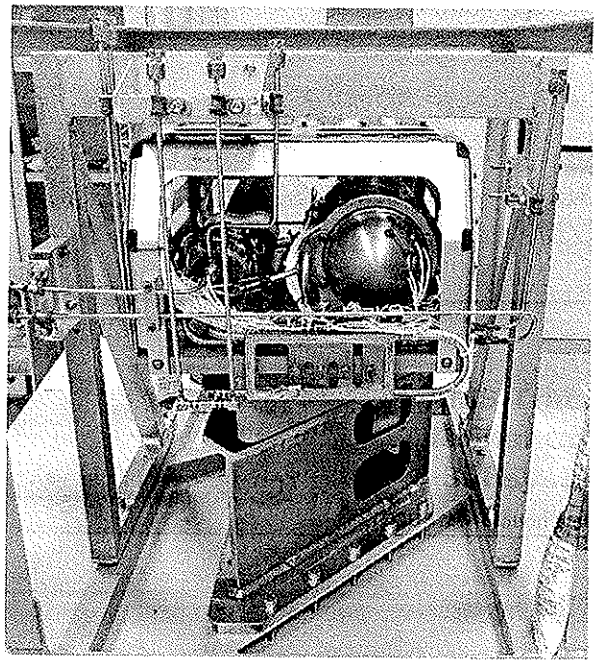

Figure 2-2: Picture of TTCB-Primary FM

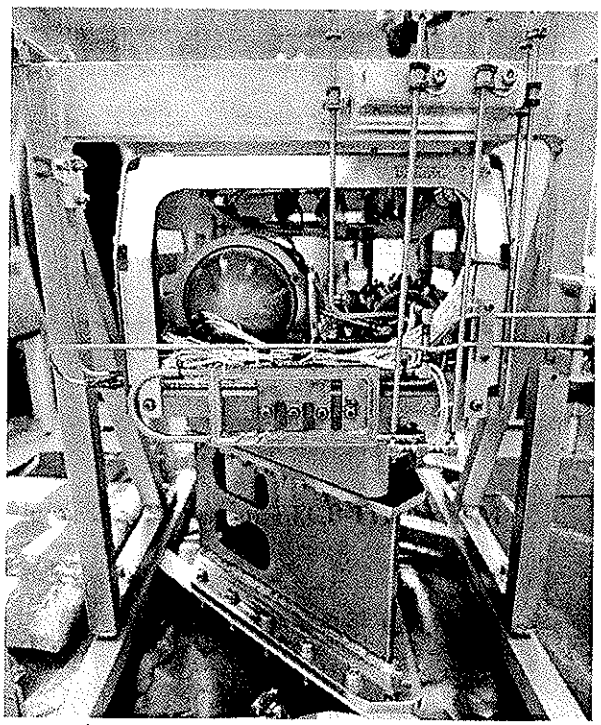

Figure 2-3: Picture of TTCB-Secondary FM

No part of this document may be reproduced and/or disclosed, in any form or by any means, without the prior written permission of NLR.

3 Test Requirements and success criteria

The test is successful when the following requirements are fulfilled.

- No visual damage of the test article is found
- No significant discrepancies between pre- and post sine sweep curve response
- All mechanics frequencies are above 50Hz
- Functional check before and after show no discrepancies

4 Test facility description and measurement equipment

The test is performed at in Terni.
The following equipment will be used:

- Vibration test facility
- Digital camera for documentation of visual inspection
- Accelerometers to monitor and control the vibration
- Additional 3-axis accelerometer to monitor the pump vibrations

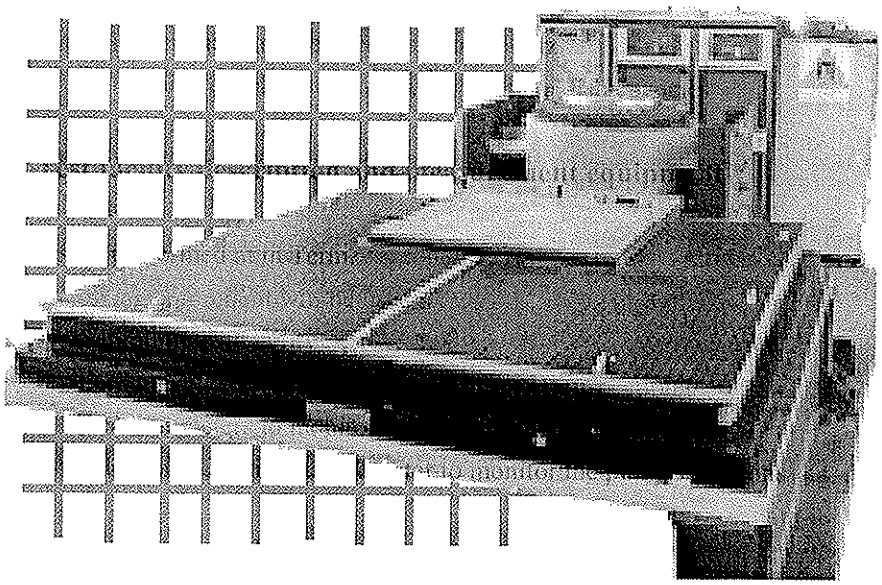

Figure 4-1: Vibration table @ SERMS

No part of this document may be reproduced and/or disclosed, in any form or by any means, without the prior written permission of NLR.

4.1 Location of accelerometers

The accelerometer to control the table will always be located on the interface plate with the vibration table. The position will be changed according to the test axis to be performed.

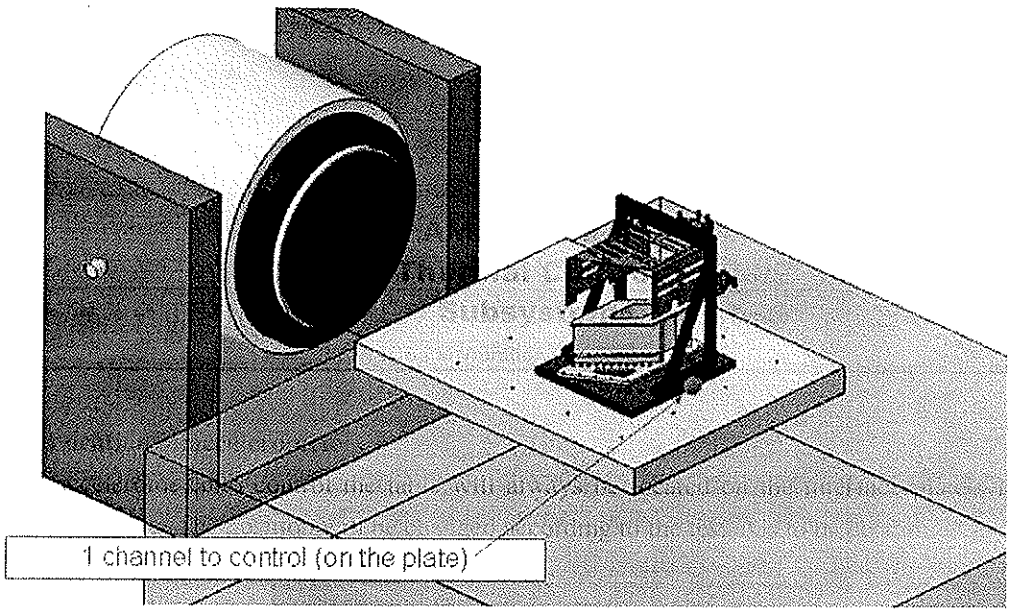

Figure 4-2: Location of the control sensor on the I/F plate (first axis)

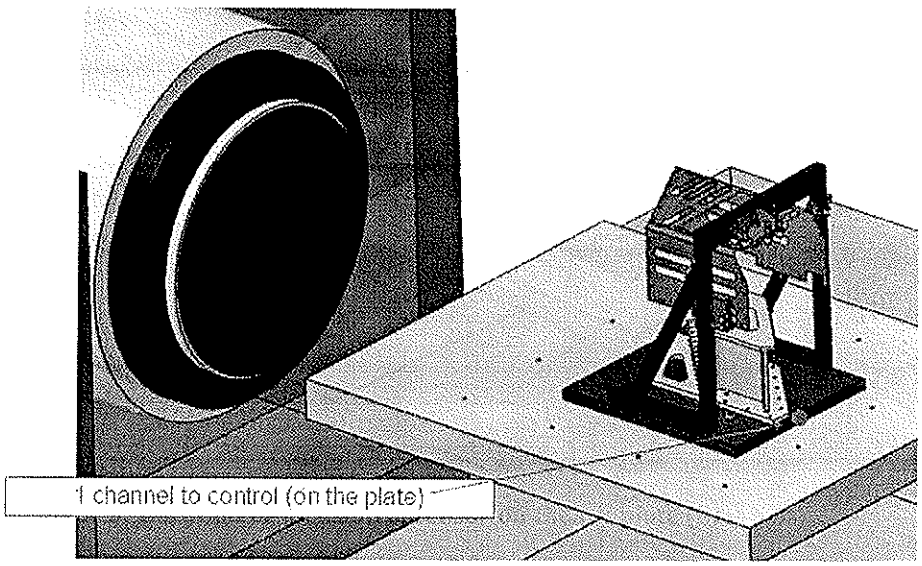

Figure 4-3: Location of the control sensor on the I/F plate (second axis)

No part of this document may be reproduced and/or disclosed, in any form or by any means, without the prior written permission of NLR.

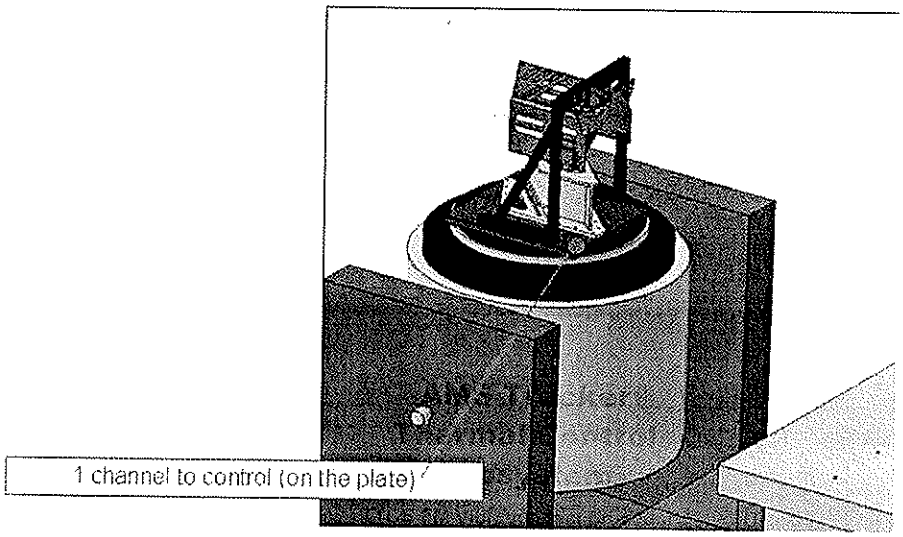

Figure 4-4: Location of the control sensor on the I/F plate (third axis)

Two other sensors will be applied to measure the response in the orthogonal directions. As the base plate is the most representative part the locations proposed are as close to the base plate as possible.

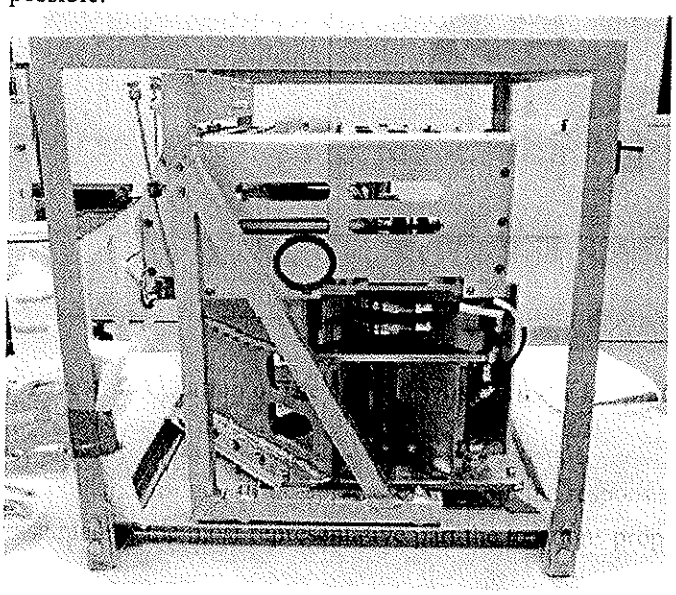

Figure 4-5: Location of the response accelerometers 1 on the TTCB

No part of this document may be reproduced and/or disclosed, in any form or by any means, without the prior written permission of NLR.

7 TTCB Vibration overall test procedure

The TTCB vibration test procedure sheets consist of 3 parts.

1. TTCB vibration pre-test vibration sheets
2. TTCB vibration vibration sheets
3. TTCB vibration post-test vibration sheets

No part of this document may be reproduced and/or disclosed, in any form or by any means, without the prior written permission of NLR.

7.1 TTCB vibration pre-test procedure sheets

	TTCB Box pre-test vibration sheets		company:		date: 27/5/2009	
	Fill in by hand.		engineer: RP		location: ESTEC	
Step	Action	Monitoring	Value	**Result**	Comment	√
1.	Record model type		P / S	S		
2.	Perform filling of the vibration test loop according to AMSTR-SYSU-PR-024 FM TTCB Filling and venting procedure			✓		✓
3.	Copy the measured volume of the TTCB (total volume- volume external loop parts)		(Litre)	1.241L.		
4.	Copy the filling rate here		(g/litre)	559.2		
5.	Define maximum allowed temperature during vibration test		(°C)	62 °C	max T with 160 bars checked by mollier diagram Copy to Appendix B table	
6.	Perform functional test according to AMSTR-NLR-PR-028				See separate procedure	
7.	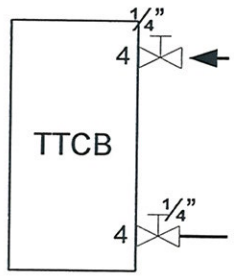 Close the valves connecting the loop					✓
8.	Monitor Test Environmental Temperature during testing		(°C)		Automatic or table app B.	

	TTCB Box pre-test vibration sheets		company:		date:	
	Fill in by hand.		engineer:		location:	
Step	Action	Monitoring	Value	**Result**	Comment	√
9.	**Install accelerometers**					
10.	Install the accelerometer to the Vibration I/F plate (figure 4.2)	Type/location		√		
11.	Install the accelerometer 1 to the TTCB sides (see section 4.1)	Type/location		√		
12.	Install the accelerometer 2 to the TTCB sides (see section 4.1)	Type/location		√		
13.	Install accelerometer close to the pumps (see section 4.1)	Type/location		√		
14.	Install the TTCB on the vibration table in first direction 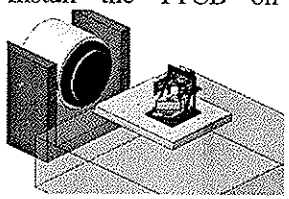 Fasten flight bolts according to ATS of TTCB and fill forms Fasten non-flight bolts fill forms		Z-axis			
15.	**Perform visual inspection prior to test**			√		
16.	**Visual inspection**, unaided eye, look at outer surface for - scratches - dents - cleanliness	 scratches Dents Particles/grease		 ✓ ✓ particles	 NG CLEAN ROOM	

	TTCB Box pre-test vibration sheets		company:		date:	
	Fill in by hand.		engineer:		location:	
Step	Action	Monitoring	Value	**Result**	Comment	√
17.	Look inside box for -Loose particles due to shaving - Loose cables/harnesses - Loose bolts/nuts - Loose shaving protection of rivnuts			✓ ✓ ✓ ✓		✓
18.	Attachment of glued components	PT1000 heaters DS18s20		✓ ✓ ✓		✓
19.	Cable harness	Chafing/mounting		✓		✓
20.	Take pictures of TTCB from all sides			✓		✓
21.	**End of sheet**					

7.2 TTCB vibration test sheets

	TTCB Vibration test sheets		company:		date: 23 - May - 2009	
	Fill in by hand.		engineer: A. Alonso		location: Terni	
Step	Action	Monitoring	Value	**Result**	Comment	√
1.	Record model type		P / S	S		
2.	**Scanning test to check loose parts and characterise**		√	√	loop check	
3.	Perform one PRE sine sweep from 5 to 1000 Hz 0,2 G – scan rate 1 oct/min	Check loose parts		√	If any loose parts are detected stop test	
4.	If loose parts are detected improve attachments			√		
5.	Check that the frequencies of the mechanics are well above 50Hz Document "response" curves			√		
6.	Repeat step 2-5 until no loose parts detected					
7.	Document the last characterisation "response curve"		Write down file name	√	File names will be in TEST DIARY –	
8.	**Perform Random Vibration test first axis according to spectrum in Appendix A.**			√		
9.	**Perform one POST sine sweep from 5 to 1000 Hz** **0,2 G – scan rate 1 oct/min**			√		

	TTCB Vibration test sheets		company:		date:	
	Fill in by hand.		engineer:		location:	
Step	Action	Monitoring	Value	**Result**	Comment	√
10.	Check that the frequencies of the mechanics are well above 50Hz Document "response" curves			√		
11.	Document the last characterisation "response curve"		file name			
12.	**Perform visual inspection after test**			√		
13.	**Visual inspection**, unaided eye, look at outer surface for - scratches - dents - cleanliness	scratches Dents Particles/grease		√		
14.	Look inside box for -Loose particles due to shaving - Loose cables/harnesses - Loose bolts/nuts - Loose shaving protection of rivnuts			√		
15.	Attachment of glued components	PT1000 heaters DS18s20				
16.	Cable harness	Chafing/mounting				
17.	Take pictures of TTCB from all sides			√		

	TTCB Vibration test sheets		company:		date:	
	Fill in by hand.		engineer:		location:	
Step	Action	Monitoring	Value	**Result**	Comment	√
18.	**End of first axis vibration**					
19.	**Second axis Vibration test**					
20.	Install the TTCB on the vibration table in second direction 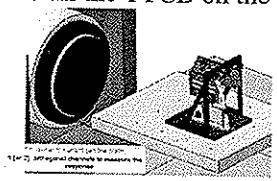 Rotate 90° the plate (without unscrewing the bolt between box and fixture) to perform the second axis Fasten non-flight bolts			√		
21.	**Install accelerometers**					
22.	Install the accelerometer to the Vibration I/F plate (figure 4.3)	Type/location		√	Indicate location/orientation change	
23.	**Perform visual inspection prior to test**			√		
24.	**Visual inspection**, unaided eye, look at outer surface for - scratches - dents - cleanliness	scratches Dents Particles/grease		√		

	TTCB Vibration test sheets		company:		date:	
	Fill in by hand.		engineer:		location:	
Step	Action	Monitoring	Value	**Result**	Comment	√
25.	Look inside box for -Loose particles due to shaving - Loose cables/harnesses - Loose bolts/nuts - Loose shaving protection of rivnuts					
26.	Attachment of glued components	PT1000 heaters DS18s20				
27.	Cable harness	Chafing/mounting				
28.	Take pictures of TTCB from all sides			√		
29.	**Perform one PRE sine sweep from 5 to 1000 Hz 0,2 G – scan rate 1 oct/min**	**Check loose parts**		√	**If any loose parts are detected stop test**	
30.	Check that the frequencies of the mechanics are well above 50Hz Document "response" curves			√		
31.	Document the last characterisation "response curve"		file name			
32.	**Perform Random Vibration test second axis according to spectrum in Appendix A.**			√		

	TTCB Vibration test sheets		company:		date:	
	Fill in by hand.		engineer:		location:	
Step	Action	Monitoring	Value	**Result**	Comment	√
33.	**Perform one POST sine sweep from 5 to 1000 Hz** **0,2 G – scan rate 1 oct/min**					
34.	Check that the frequencies of the mechanics are well above 50Hz Document "response" curves					
35.	Document the last characterisation "response curve"		file name			
36.	**Perform visual inspection after test**					
37.	**Visual inspection**, unaided eye, look at outer surface for - scratches - dents - cleanliness	scratches Dents Particles/grease		particles.		✓
38.	Look inside box for -Loose particles due to shaving - Loose cables/harnesses - Loose bolts/nuts - Loose shaving protection of rivnuts					
39.	Attachment of glued components	PT1000				✓